جمهوری اسلامی ایران

سازمان برنامه و بودجه

ضوابط و معیارهای فنی شبکه‌های آبیاری و زهکشی

نقشه‌های تیپ سازه‌های فنی

دفتر تحقیقات و معیارهای فنی

امور پیمان
omoorepeyman.ir

نشریه شماره ۱۰۷

انتشارات سازمان برنامه و بودجه ۷۱/۰۰/۳

بسمه تعالی

جمهوری اسلامی ایران
سازمان برنامه وبودجه

به:	
موضوع: ضوابط و معیارهای فنی شبکه های آبیاری وزهکشی نقشه های تیپ سازه های فنی	دستورالعمل شماره ۲۲-۵۶/۳۹۲-۱ مورخ ۷۱/۱/۹
تذکر:	کد

باستناد ماده ۲۳ قانون برنامه وبودجه کشور وآئین‌نامه استانداردهای اجرائی طرحهای عمرانی این دستورالعمل از نوع گروه ۲ مذکور درماده هفت آئین‌نامه در یک صفحه صادر میگردد.

تاریخ مندرج درماده ۸ آئین‌نامه درمورد این دستورالعمل ۷۱/۷/۱ میباشد.

به پیوست نشریه شماره ۱۰۷ دفتر تحقیقات ومعیارهای فنی این سازمان تحت عنوان " ضوابط و معیارهای فنی شبکه های آبیاری و زهکشی . نقشه های تیپ سازه های فنی " اعلام می شود .

دستگاههای اجرایی ومهندسان مشاور می توانند مفاد نشریه یاد شده وضوابط و معیارهای مندرج در آن را ضمن تطبیق با شرایط کار خود در طرحهای عمرانی مورد استفاده قرار دهند .

مسعود روغنی زنجانی
معاون رئیس جمهور و
رئیس سازمان برنامه وبودجه

omoorepeyman.ir

مقدمه

هدف از تهیه این نشریه، تشریح تیپ سازه‌های فنی شبکه‌های آبیاری و زهکشی، همانگی و پرهیز از تکرار خدمات مهندسی در پروژه‌هائی است که پس از تدوین این ضوابط اجرا، خواهند شد. نتایج عمومی این مطالعات بصورت نقشه‌های تیپ اجرائی کانالها و سازه‌های فنی عمده شبکه‌های آبیاری و زهکشی برای ظرفیت‌های تا ۳ مترمکعب در ثانیه ارائه شده است. نقشه‌های تیپ این مجموعه در اندازه‌های A2 تهیه و در هر یک از آنها برحسب مورد جداول یا توضیحات ضروری ارائه شده است. این مجموعه در ۱۰ بخش بشرح زیر تنظیم گردیده است:

بخش اول	سازه‌های انتقال جریان آب	Conveyance Structures
بخش دوم	سازه‌های تنظیم جریان آب	Regulating Structures
بخش سوم	سازه‌های حفاظتی	Protecting Structures
بخش چهارم	سازه‌های زهکشی	Drainage Structures
بخش پنجم	سازه‌های اندازه‌گیری جریان آب	Water Measurement Structures
بخش ششم	سازه‌های انرژی گیر	Energy Dissipator Structures
بخش هفتم	لوله‌ها	Pipes
بخش هشتم	وسایل ایمنی	Safety Facilities
بخش نهم	مقاطع کانالها و راههای دسترسی	Typical Canal & Road Sections
بخش دهم	اطلاعات عمومی	General Notes

مطالب مندرج روی نقشه‌های شماره 20/2/1/01,02,03 اطلاعات عمومی مربوط به غلب سازه‌های این مجموعه را در بر دارد.

مبانی طراحی در انجام محاسبات فنی سازه‌های این نشریه بشرح زیر است:

۱ آئین نامه: - طراحی سازه‌ها براساس آئین نامه AASHTO-83 انجام شده است.

- حداقل میلگرد لازم برای کنترل ترکهای سازه‌های آبی مطابق با ضوابط U.S.B.R. تعیین شده است.
- حداکثر فاصله میلگردها طبق استاندارد شماره ۵-۱۸ موسسه استاندارد و تحقیقات صنعتی ایران تعیین شده است.
- بار زنده پلهای ماشین رو مطابق با ضمیمه دستور فنی شماره ۱۱ وزارت راه - سازمان برنامه تعیین شده است.
- بار زنده پلهای پیاده رو مطابق با ضوابط U.S.B.R تعیین شده است.
- تمامی عملیات اجرائی باید با مشخصات فنی عمومی شبکه‌های آبیاری و زهکشی نشریه شماره ۱۰۸ دفتر تحقیقات و معیارهای سازمان برنامه و بودجه مطابقت داشته باشد.

۲- مصالح مصرفی: ۲-۱- بتن: بتن مورد مصرف با عیار ۲۵۰ کیلوگرم سیمان در متر مکعب میباشد.
مقاومت مشخصه این بتن ۲۰۰ کیلوگرم بر سانتیمتر مربع در ۲۸ روز میباشد.

۲-۲- میلگرد: میلگرد مصرفی از نوع A-II با تنش جاری شدن ۳۰۰۰ کیلوگرم بر سانتیمتر مربع میباشد.

۲-۳- سیمان: در مناطقی که بتن در معرض تاثیر سولفات ها قرار گیرد باید از سیمان تیپ II یا سیمان تیپ V استفاده شود که بستگی به میزان سولفات موجود در آب و خاک دارد.

۳- روش محاسبه:

در محاسبات سازه‌ها از روش تنش مجاز Working Stress استفاده شده است. آنالیز مورد استفاده، یک آنالیز خطی است که چون میلگرد مصرفی از نوع A-II است و تنش مجاز آن $\frac{2}{3}f_y$ = ۱۵۰۰ کیلوگرم بر سانتیمتر مربع میباشد نتایج محاسبات با روش نهایی تغییر چندانی در نتایج طراحی با روش تنش مجاز نمیدهد.

۴- بارگذاری: - بار زنده ماشین آلات مطابق با ضمیمه دستور فنی شماره ۱۱ وزارت راه، سازمان برنامه تعیین شده که عبارتست از کامیون استاندارد ۴۵ تنی
بار زنده پیاده رو بشرح زیر میباشد:

- پیاده روی ساختمانها با Stoplog برای بار زنده ۷۵۰ کیلوگرم بر متر مربع طراحی شده.
- پیاده روی ساختمانها بدون Stoplog برای بار زنده ۵۰۰ کیلوگرم بر متر مربع طراحی شده.

- برای تعیین فشار اکتیو خاک (فشار افقی) از آئین نامه انجمن مهندسین آبیاری آمریکا[1] استفاده شده است. در این آئین نامه انواع خاکریزهای پشت دیوارهای حائل در پنج گروه طبقه بندی گردیده و فشار افقی خاک برای هر گروه تعیین شده است. با مطالعه نقشه خاکشناسی ایران میانگین فشار افقی خاک گروههای ۲ و ۳[2] برای بارگذاری انتخاب شده است که میزان آن ۶۱ کیلوگرم بر متر مربع میباشد.

۵- جزئیات آهن گذاری:

برای رعایت مهارتهای کارگاهی در ایران آهن گذاری طبق ضوابط آئین کاربرد ۵-۱۸ موسسه استاندارد و تحقیقات صنعتی ایران انجام شده است و فقط برای حداقل درصد میلگرد از ضوابط U.S.B.R. استفاده شده است.

برای اعضاء و قطعات بتنی با ضخامت کمتر از ۲۰ سانتیمتر یک ردیف آرماتور و برای ضخامت ۲۰ سانتیمتر و بیشتر دو ردیف آرماتور منظور شده است.
در بعضی موارد که آهن با قطر ۱۴ میلیمتر سطح مقطعی بیشتر از سطح مقطع مورد نیاز داشته است از آهن شماره ۱۲ استفاده شده است.
حداقل قطر آهنهای سازه‌های آبی #4 است که معادل آن در جهت ضرب اطمینان میلگرد آجدار نمره ۱۴ منظور شده است.
حداکثر فاصله آهنها: حداکثر فاصله آهنهای خمشی ۲۵ سانتیمتر و یا ۱.۵ برابر ضخامت دال میباشد. در مواردیکه مقاومت خمشی دال با آهن گذاری با فاصله ۲۵ سانتیمتر جوابگو از لنگر خمشی موجود باشد فاصله آهنها ۳۰ سانتیمتر شده است.
حداکثر فاصله آهنهائی که برای جلوگیری از ترک خوردن بتن بکار رفته ۳۳ سانتیمتر است.

در پایان لازم است از آقای احمد آل یاسین، آقای یوسف شفیعی، آقای امیر موشنگ بان، آقای حسین حجازی کناری، آقای حمید ساسانی، آقای صابر طیب زاده و خانم فهمه‌ش مسیبان و خانم پری شهبازنژاد کارشناسان محترم دفتر تحقیقات و معیارهای فنی، مهندسین مشاور پاسیلاک که مسئولیت تهیه این مجموعه را عهده‌دار بوده‌اند و نیز کارشناسان محترم زیر که در بررسی نهائی این نشریه همکاری داشته‌اند تشکر و قدردانی نماید:

آقایان حسین شفیعی فرد و سید اکبر اباشی	از سازمان برنامه و بودجه
آقایان حسن شنطیا و صدیق شابوری	از مهندسین مشاور یکم
آقایان جعفر لطفی و تراب شاه کاظمی	از مهندسین مشاور مهاب قدس

دفتر تحقیقات و معیارهای فنی
زمستان ۱۳۷۰

1- American Railway Engineering Association - AREA

2-:
2-1 Type 2 - Coarse-grained Soil of Low permeability due to admixture of particles of silt and clay
2-2 Type 3 - Fine silty sand, granular materials with conspicuous clay content; or residual soil with stones

omoorepeyman.ir

GENERAL NOTES

Unless otherwise shown on reinforcement drawings, details and notes shown have are typical for all reinforcement drawings that are refered to this drawing.

ENGINEER:

The Engineer is an Engineering organization or body who uses these drawings for construction purposes

DESIGN CRITERIA:

Structural design is based on working stress method using $f'c = 250 Kg/cm^2$ specified compressive concrete strength at 28 days (or $300 Kg/cm^2$ for cubic sample, concrete B_300) and $fy = 3000 Kg/cm^2$ Specified minimum yield strength of reinforcement.

Both A C I 318 (83) and the AASHTO (77) standards have been used for design of structures.

Thickness of concrete or reinforced concrete members are shown minimum, and can be increased by the ENGINEERS if required.

BEARING CAPACITY:

Foundation bearing pressures for small structures are of small magnitude and will ordinarily be less than allowable bearing pressure for the various soil types.

Foundation treament is required however for low density or expansive soils.

Unsuitable material should be overexcavated and replaced with compacted, nonexpansive soil.

LEAN CONCRETE:

In order to have a clean and stable base for pouring concrete & for formwork of foundation, a layer of lean concrete (150 Kg. cement/m^3) with at least 10cm. thickness may be used with prior approval of the ENGINEER.

JOINTS:

Shear key will be used in wall to foundation construction joints as directed by the ENGINEER.

Waterstop in expantion and contraction joints filler material and location of expansion joints shall be directed by the Engineer based upon locol conditions.

Placement of construction joints during concrete placement will be in accordance with the ENGINEER'S approval.

SYMBOLS:

A circle at the end of a bar indicates a bend.

Splices shown thus ——+—+—— indicate a lapped splice, not a bend in the bar.

DIMENSIONS

Dimensions shown for the bars in the list of reinforcement are to the back of the bars and dimensions shown for bar spacings are to the center lines of the bars unless otherwise shown. Clear cover dimensions are marked "cl". All dimensions in the bar lists are calculated and can be rounded off up to 5% by the ENGINEER.

COVER

Place the reinforcement so that the clear distance between face of concrete and nearest reinforcement is 4cm. for Φ 16 bars and smaller and 5cm. for Φ18 bars and larger, except provide a clear distance from face of concrete placed against earth or rock of 5cm. where member thickness is 22 cm. or less and 7.5 cm. where member thickness is greater than 22 cm, the clear distance being to the design dimension line reinforcement paralleling construction joints should have a minimum of 5cm. clear cover.

BENT BARS AND STANDARD HOOKS:

The minimum radius or bend measured on the insid of the bars for all reinforcement requiring bendeing and for standard hooks shall not be less than the values shown in the table:

Minimum diameters of bend for standard hooks

	Bar diameter mm.	Minimum diameter Hook
Main Reinforcement	8 to 25	6 bar diameter
	26 to 32	8 bar diameter
Stirrups & tie hooks	8	40mm.
	10 to 12	50mm.
	14 to 16	65mm.

The minimum extensions of bars for standard hook are shown in the following figure:

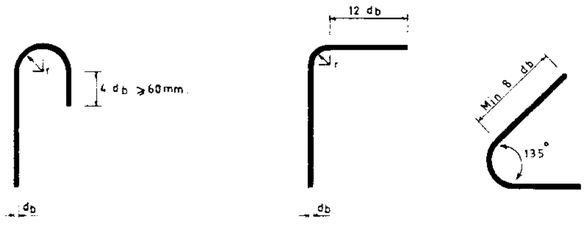

(a) Main reinforcement

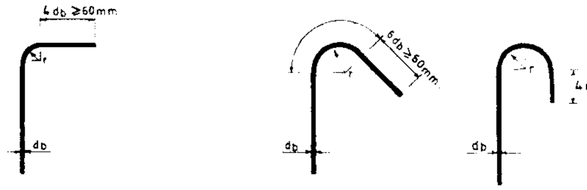

(b) Stirrups and ties

STANDARD HOOKS

REINFORCEMENT DOWELS:

Dowels may be indicated on the drawing thus Φ 14 (d) dowels shall have a min. embedment and projection equal to that required for lap splicing a bar of the same diameter.

PLACING:

Bars at small openings (max. 45cm.) in walls and slabs may be spread apart not more than 1½ times the bar spacing.

Reinforcement may be adjusted in the field to clear waterstops, keys, form ties, anchor bars, seals, recesses, embedded metalwork, and conduits except in heavily reinforced areas. In such cases relocation of the embedded materials must be considered. In no case should bars be bent to greater than 6 to 1 slope. Where possible, reinforcement shall be placed to maintain a clear distance of at least 2.5cm. between the reinforcement and anchor bolt, form ties, or other embedded metalwork.

Reinforcement parallel to anchor bolts or other embedded metalwork shall be place to maintain a clear distance of at least 1 times the max. size aggregate.

Reinforcement not to be placed between or within 10cm. of main power leads.

SPACING:

The first and last bars in slabs and walls, stirrups in beams, and ties in columns are to start and end at a maximum of one half of the adjacent bar spacing.

SPLICES:

Unless otherwise shown the minimum length of lap for splicing parallel bars shall be 1.7 ld. ld shall be as given in table "A". When reinforcing bars of different size are to be spliced, the lap length shall be governed the smaller diameter bar. Splices are to be made so that the given distances to face of conc. will be manintained. The min. lap requirement "s" for non-parallel bars shall be as given in table "B".

TABLE "A"
Development lenght ld

db mm.	ld cm.
8 to 16	30
8 to 20	35
22	40
24	50
26	60
28	70
30	80
32	90
34	100

TABLE "B"
Lenghth of splice "s" for non-parallel bar

ANGLE	s
0 to 10	0.9 ld
10 to 30	1.0 ld
30 to 50	1.2 ld
50 to 65	1.4 ld
65 to 80	1.5 ld
80 to 90	1.7 ld.

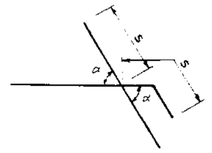

Provide a hook if proper length cannot obtained by bending and extending bar.

ACCESSORIES:

Bar supports spacers and other accessories are not shown on the design dwgs. The recommendations of ACI 315_or other approved supporting systems my by used.

REFERENCE:

Unless otherwise shown follow the recommendations established by American concrete institutes.

BARS WITH VARIABLE UNIT LENGTH

Length quantities listed for variable bars are average length only. Exact length of bars shall be considered base on the structure dimensions.

LEAN CONCRETE

Lean concrete, its mixe design, thickness and method of appfication shall be determined by the Engineer based on project status and field conditions.

REFERENCE DWGS: See also dwgs. Nº. 20/2/1/02 & 20/2/1/03

Scale:	IRRIGATION & DRAINAGE STANDARDS		
Date:	DWG. Nº 20/2/1/01		GENERAL NOTES CONCRETE REINFORCEMENT
Approved:	Sheet Nº 1 of 3	Rev. Nº	

ISLAMIC REPUBLIC OF IRAN
MINISTRY OF PLAN & BUDJET
TECHNICAL RESEARCH AND STANDARD BUREAU

omoorepeyman.ir

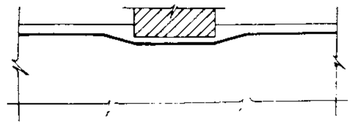

RECESS LESS THAN 8 cm.

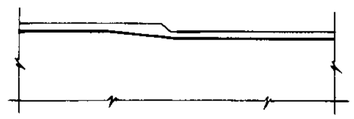

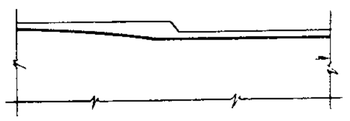

OFFSET 8 cm. OR LESS

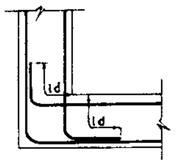

MEMBERS LESS THAN ld IN THICKNESS

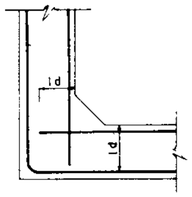

FILLET LESS THAN 30 cm

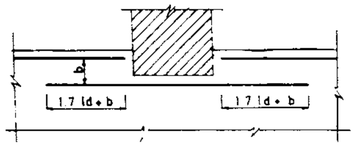

RECESS 8 cm. TO 20 cm.

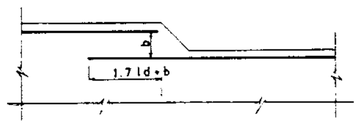

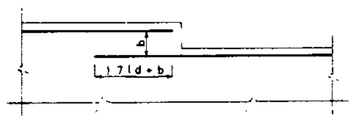

8 cm. < OFFSET < 20 cm.

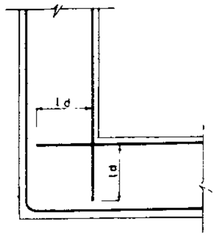

MEMBERS GREATER THAN ld IN THICKNESS

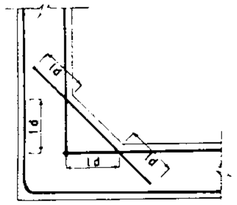

FILLET 30 cm. OR GREATER

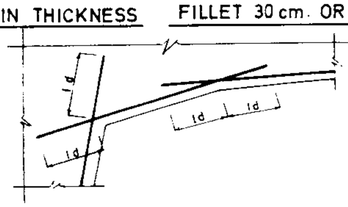

FORMED CORNER

TYPICAL CORNER DETAILS

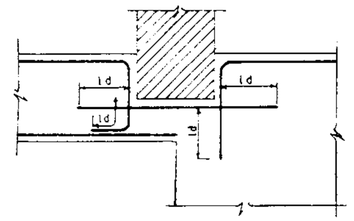

RECESS 20 cm. AND GREATER

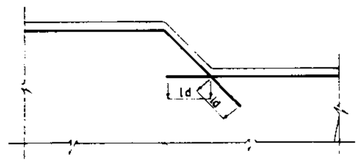

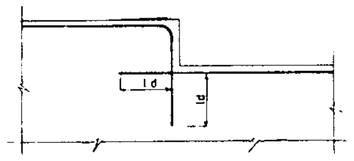

OFFSET 20cm. or MORE
RESTRICED MEMBER THICKNESS

ANGULATED

RIGHT ANGLE

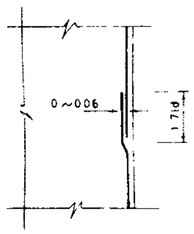

OVER LAP

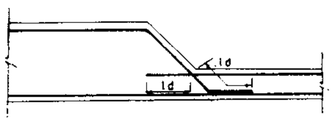

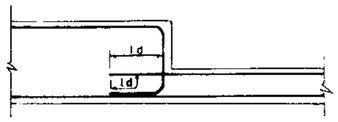

TYPICAL OFFSET DETAILS

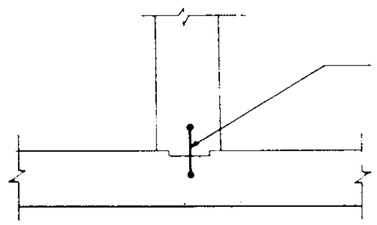

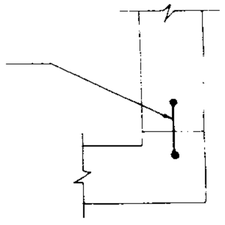

WATERSTOP

TYPICAL CORNER DETAILS

REFERENCE DWGS: See also dwgs. Nº 20/2/1/01 & 20/2/1/03

Scale:	IRRIGATION & DRAINAGE STANDARDS		
Date:	DWG Nº. 20/2/1/02		GENERAL NOTES DETAILING REINFORCEMENT JOINT , WATERSTOP
Approved	Sheet Nº 2 of 3	Rev Nº.	

ISLAMIC REPUBLIC OF IRAN
MINISTRY OF PLAN & BUDJET
TECHNICAL RESEARCH AND
STANDARD BUREAU

omoorepeyman.ir

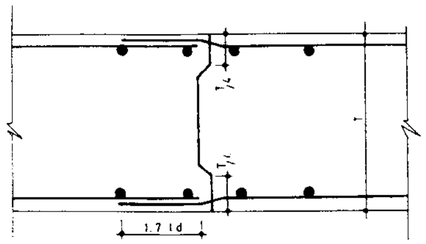

CONTINUED REINFORCEMENT

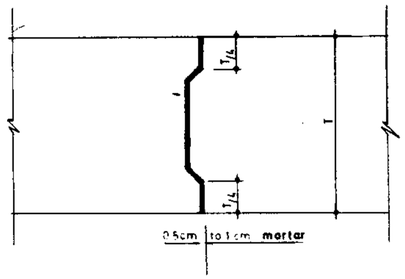

NON CONTINUED REINFORCEMENT OR PLAIN CONCRETE

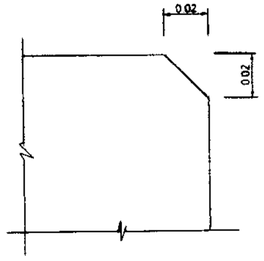

CHAMFER

CONSTRUCTION JOINT WITH SHEAR KEY

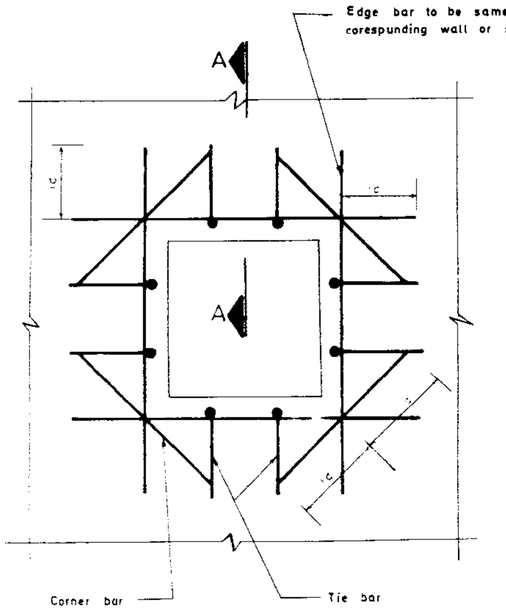

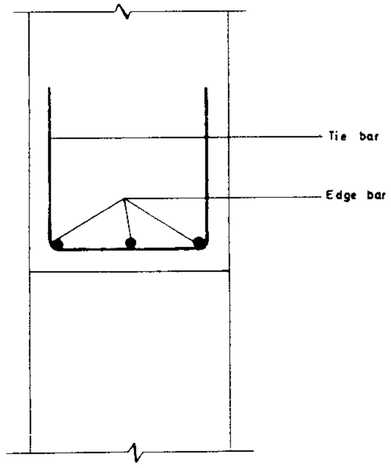

SECTION A-A

REINFORCEMENT AROUND OPENING IN WALLS AND SLABS

Table for reinforcement around openings

MEMBER THICKNESS	TIE BAR	EDGE BARS	CORNER BARS
LESS THAN 25cm	NONE	Nº. = 2	Nº = 2 ⌀ 14
25 TO 45cm	NONE	Nº = 3	Nº = 2 ⌀ 14
45 TO 90cm	⌀ 14 @ 25	Nº = 3	Nº = 3 ⌀ 16
OVER 90cm	⌀ 18 @ 25	SPACE @ 25cm	Nº = 3 ⌀ 22

-Corner bars required if either dimension opening is greater than 45 cm.

Omit edge and tie bars along sides of opening where dimension is less than 40 cm.

-Use corner bars in face of recesses dipper than 10 cm if either dimension of recesse is greater than 45 cm.

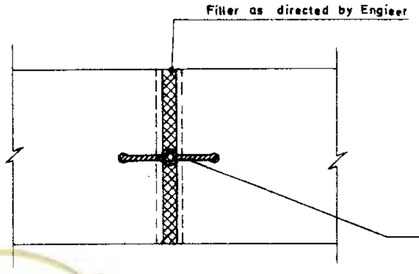

EXPANSION JOINT

Rubber waterstop for expansion joint

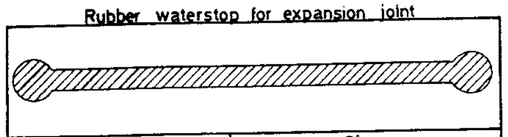

Section details	Sizes			
Width	140 mm.	190 mm.	240 mm	305mm
Web thickness	4.8 mm.	4.8 mm.	4.8 mm.	4.8mm.

Rubber center bulb waterstop for expansion joints

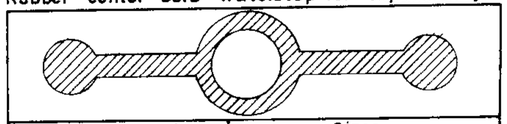

Section details	Sizes			
Width	115 mm.	150 mm	230 mm.	305 mm.
Web thickness	6.4 mm	9.5 mm	9.5 mm.	9.5 mm
Edge bulb diameter	16 mm	19 mm.	25 mm.	25 mm
Center bulb diameter	29 mm.	29 mm.	38 mm	50 mm.
Center core diameter	19 mm	16 mm	19 mm	32 mm.
Placing details	Sizes			
Minimum radius to which it can be bent on falt	3.5 m	7m	8 m	8.75m
Minimum radius to which it can be bent on edge:	75 mm	150mm.	150mm	150mm

Plastic waterstop for expansion joint

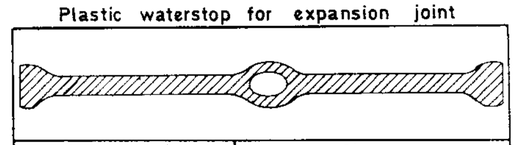

Section details	Sizes			
Width	140 mm	190 mm	240 mm.	305 mm
Web thickness	4.8 mm	4.8 mm	4.8 mm	4.8 mm
Size of edge bulb	12.5 mm.	19 mm.	19 mm.	19 mm
Width(int) of center bulb	12 mm	21 mm	21 mm	28 mm
Placing details	Sizes			
Minimum radius to which it can be bent on falt	8.5 m	14 m	16 m	29 m
Minimum radius to which it can be bent on edge	75 mm	150 mm	150 mm	230 mm

In most cases of water work structures where expansion joints are used waterstops are required.

REFERENCE DWGS: See also dwgs. Nº 20/2/1/01 & 20/2/1/02

Scale	IRRIGATION & DRAINAGE STANDARDS	
Date:	DWG. Nº. 20/2/1/03	GENERAL NOTES DETILING REINFORCEMENT JOINT WATERSTOP
Approved:	Sheet Nº. 3 of 3 Rev Nº.	

ISLAMIC REPUBLIC OF IRAN
MINISTRY OF PLAN & BUDJET
TECHNICAL RESEARCH AND STANDARD BUREAU

omoorepeyman.ir

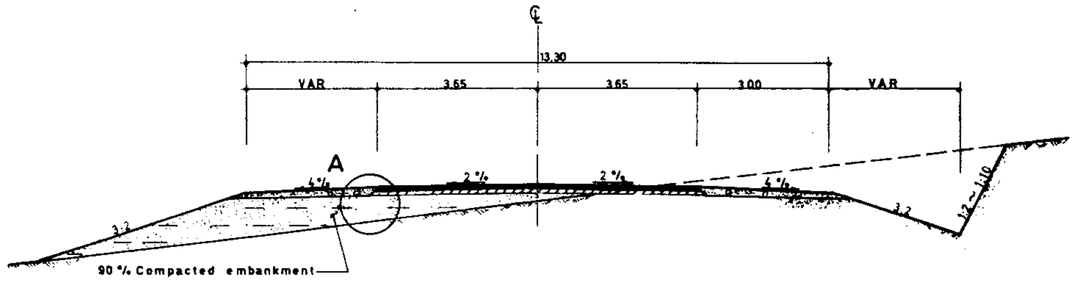

CLASS I MAIN ROAD SECTION

Scale 1:100

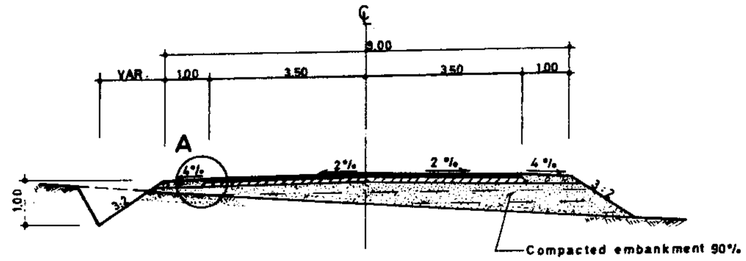

CLASS I FEEDER ROAD SECTION

Scale 1:100

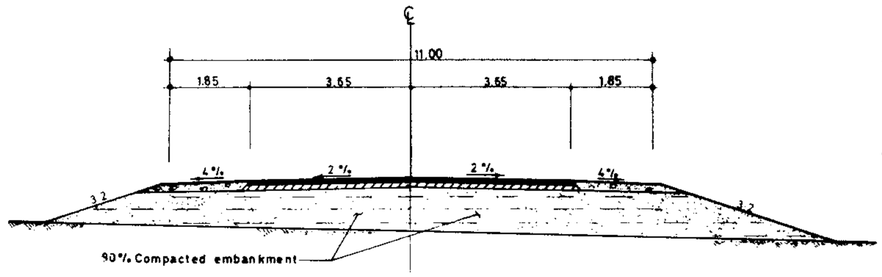

CLASS II MAIN ROAD SECTION

Scale 1:100

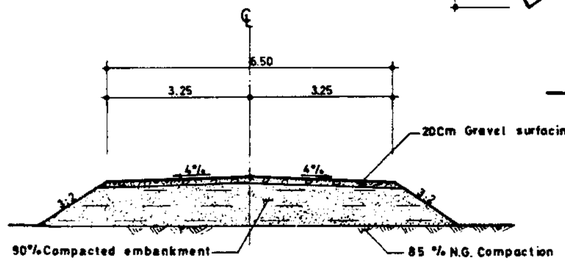

CLASS I VILLAGE ROAD SECTION

Scale 1:100

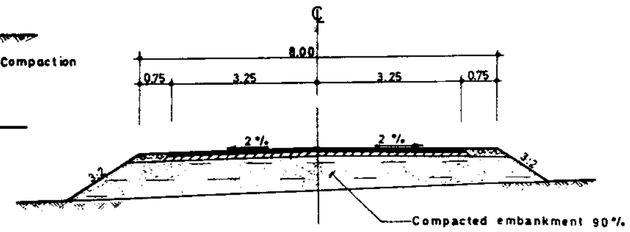

CLASS II FEEDER ROAD SECTION

Scale 1:100

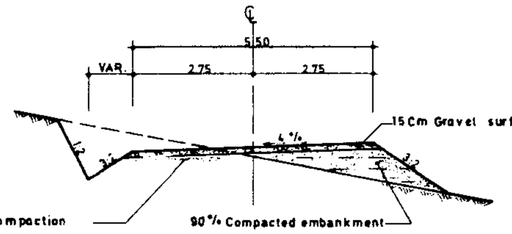

CLASS II VILLAGE ROAD SECTION

Scale 1:100

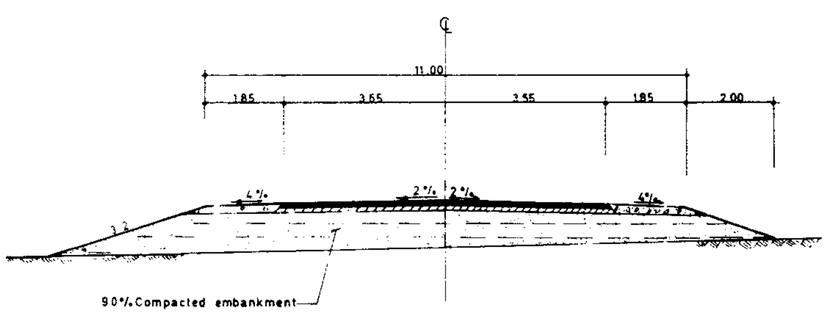

CLASS II MAIN ROAD SECTION

Scale 1:100

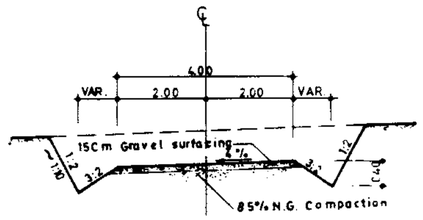

CLASS III VILLAGE ROAD OR CANAL OPERATING ROAD SECTION

Scale 1:100

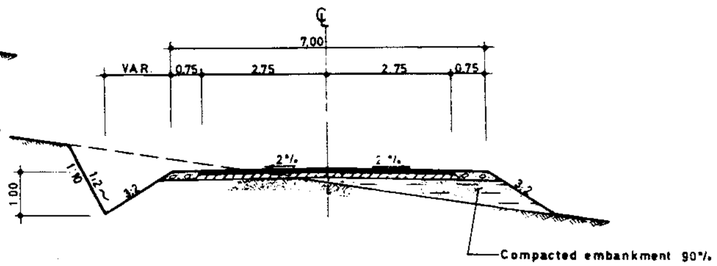

CLASS III FEEDER ROAD SECTION

Scale 1:100

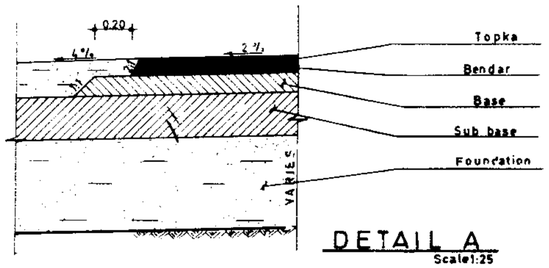

DETAIL A

Scale 1:25

NOTE:

For roads class I & II, parkings should be Provided every 1000 meters on both side (circular Nº 1_113525_22964 dated 23_10_1358 of plan & budjet organization)

REFERENCE DWGS:

Scale: 1:100	IRRIGATION & DRAINAGE STANDARDS		
Date:	DWG Nº 19/4/1/01		TYPICAL ROAD SECTIONS DIMENSIONS
Approved	Sheet Nº 1 of 1	Rev. Nº	

ISLAMIC REPUBLIC OF IRAN
MINISTRY OF PLAN & BUDJET
TECHNICAL RESEARCH AND STANDARD DUREAU

omoorepeyman.ir

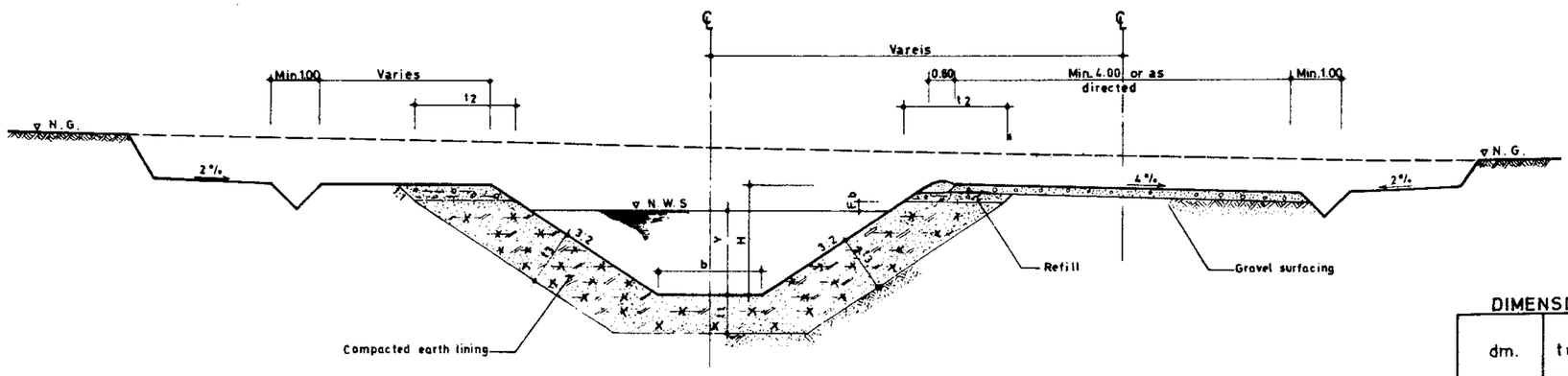

EARTH LINING IN BOTTOM AND SIDES

DIMENSION TABLE

dm.	t1	t2	t3	
			1.5 : 1	2 : 1
< 0.60	0.30	1.00	0.555	0.45
0.60 — 1.20	0.45	1.20	0.666	0.54
1.20 — 1.80	0.60	1.80	1.00	0.80
1.80 <	0.60	2.40	1.33	1.07

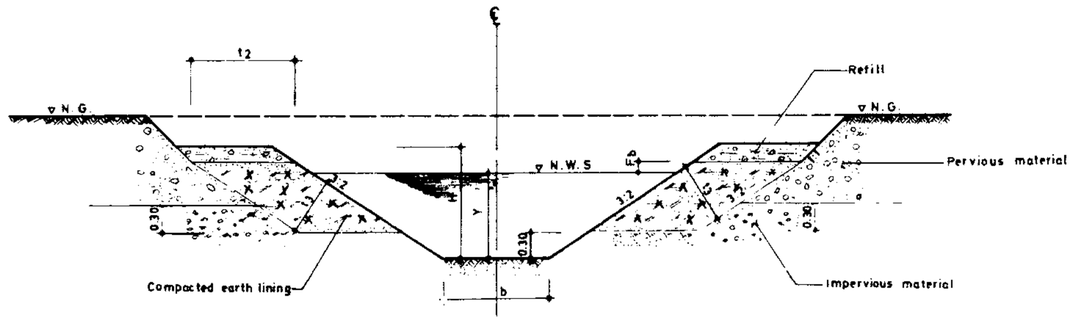

EARTH LINING IN SIDES ONLY

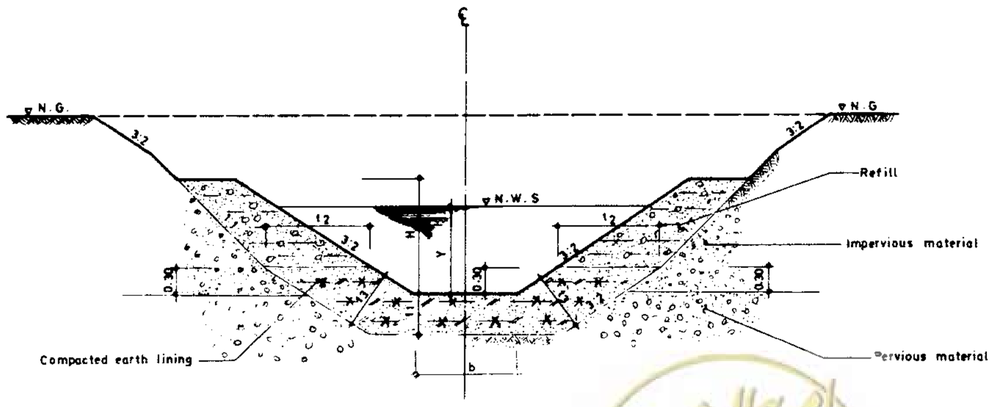

EARTH LINING IN BOTTOM ONLY

LEGEND:

- Refill
- Normal embankment
- Compacted embankment
- Compacted earth lining
- Pervious material
- Impervious material

NOTES:

1- All cut side slopes to be directed by the engineer.
2- All "V" ditches dimensions to be determined by the engineer.
3- "H", "Y", "Fb" and "b" shall be defined by the engineer.

REFERENCE DWGS: For general notes see dwg Nº 20/2/1/01 TO 20/2/1/03
See also dwg Nº 19/3/1/01

Scale: 1:50	IRRIGATION & DRAINAGE STANDARDS		ISLAMIC REPUBLIC OF IRAN MINISTRY OF PLAN & BUDJET TECHNICAL RESEARCH AND STANDARD BUREAU
Date:	DWG Nº 19/3/1/02	TYPICAL CANAL SECTION IN CUT WITH EARTH LINING	
Approved	Sheet Nº 2 of 2	Rev.Nº	

omoorepeyman.ir

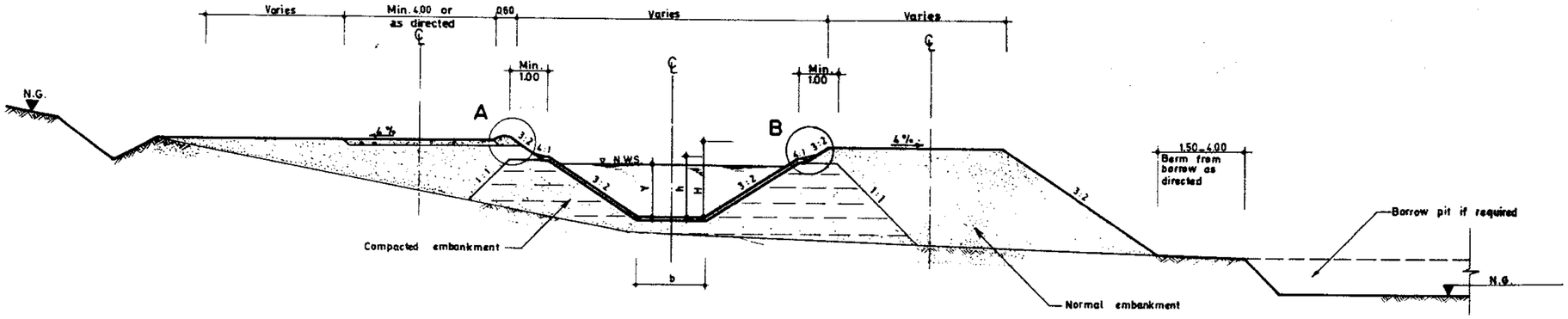

TYPICAL CONCRETE LINED CANAL SECTION IN FILL

Scale 1:100

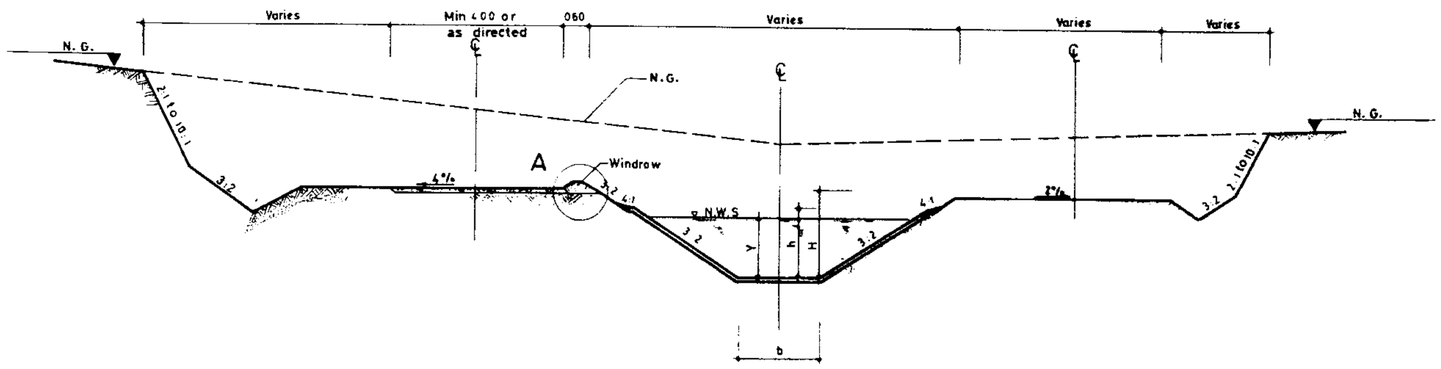

TYPICAL CONCRETE LINED CANAL SECTION IN CUT

Scale 1:100

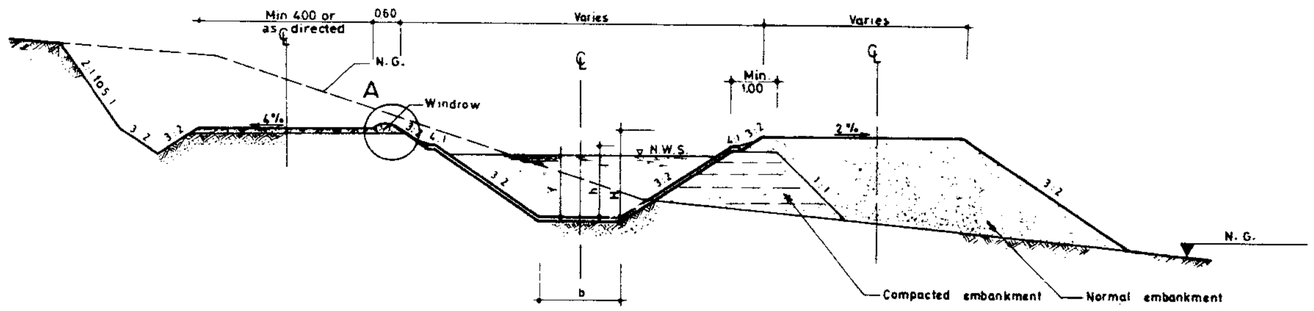

TYPICAL CONCRETE LINED CANAL SECTION IN PARTIAL FILL

Scale 1:100

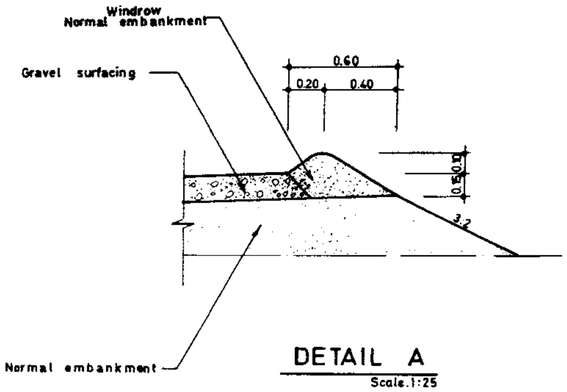

DETAIL A

Scale 1:25

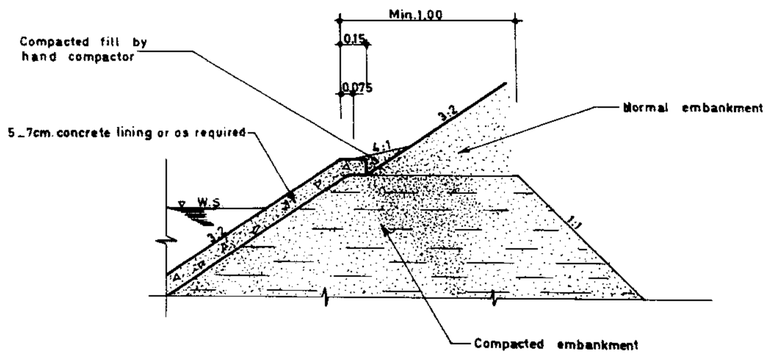

DETAIL B

Scale 1:25

NOTES:

1- All cut side slopes to be directed by the engineer.
2- All "V" ditches dimensions to be determined by the engineer.
3- "H","Y","h" and "b" shall be defined by the engineer.

REFERENCE DWGS: For general notes see dwgs. Nº 20/2/1/01 TO 20/2/1/03

Scale: 1:100 - 1:25	IRRIGATION & DRAINAGE STANDARDS		ISLAMIC REPUBLIC OF IRAN MINISTRY OF PLAN & BUDJET TECHNICAL RESEARCH AND STANDARD BUREAU
Date	DWG Nº 19/2/1/01	TYPICAL CONCRETE LINED CANAL SECTIONS	
Approved	Sheet Nº 1 of 1 Rev.Nº		

omoorepeyman.ir

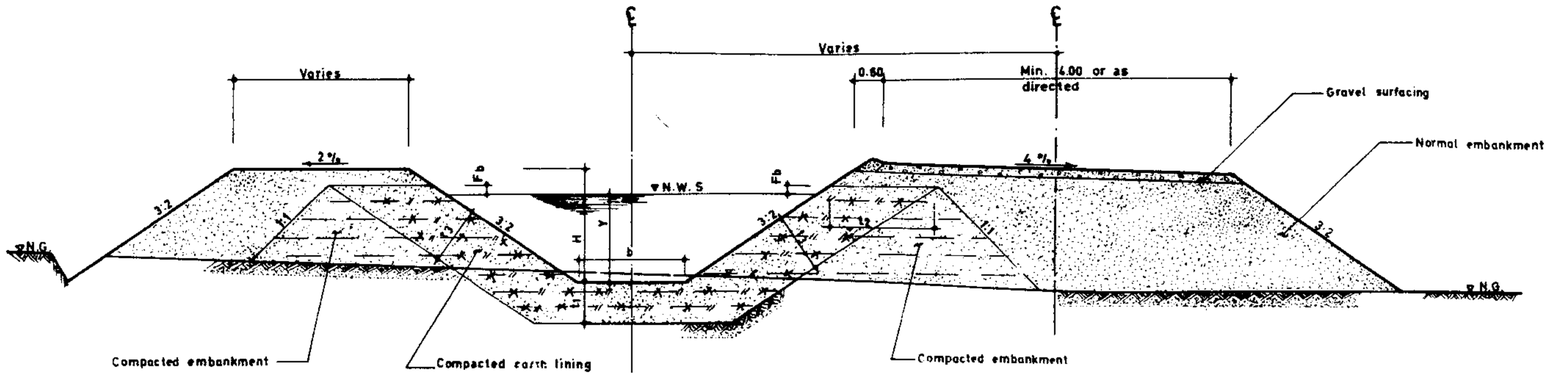

EARTH LINING IN BOTTOM AND SIDES

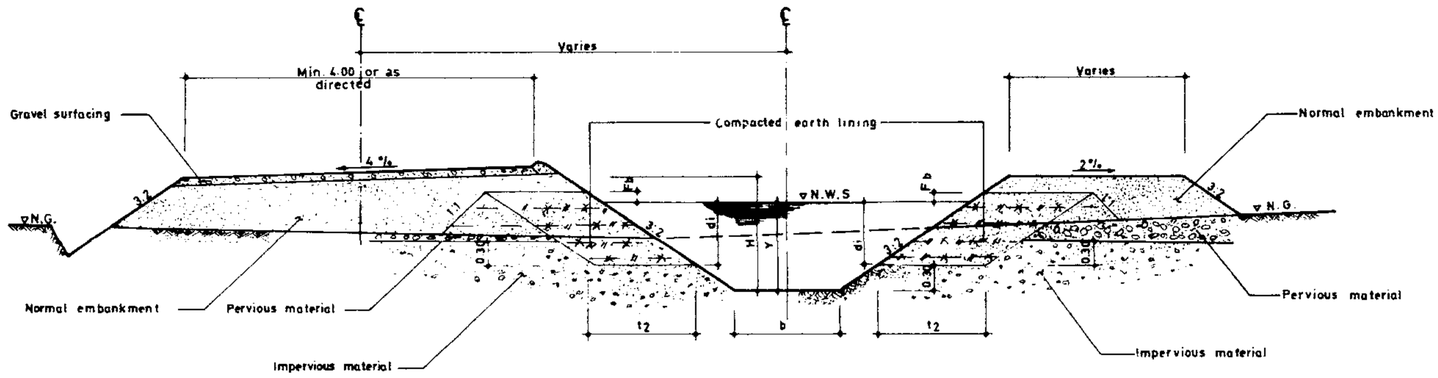

EARTH LINING IN SIDES ONLY

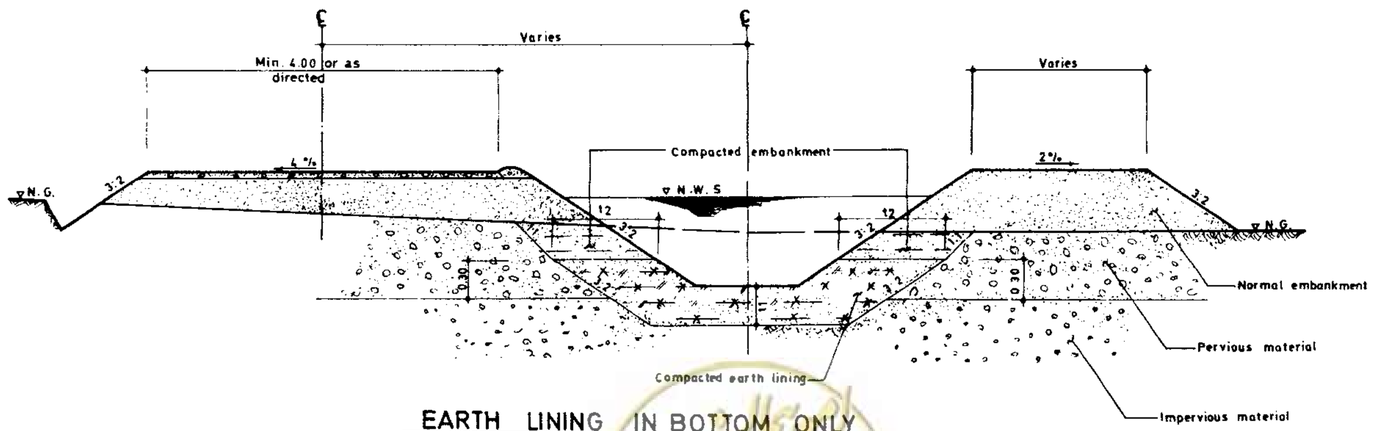

EARTH LINING IN BOTTOM ONLY

DIMENSION TABLE

dm.	t_1	t_2	t_3	
			1.5:1	2:1
< 0.60	0.30	1.00	0.555	0.45
0.60 _ 1.20	0.45	1.20	0.666	0.54
1.20 _ 1.80	0.60	1.80	1.00	0.80
1.80 <	0.60	2.40	1.33	1.07

LEGEND:

- Refill
- Normal embankment
- Compacted embankment
- Compacted earth lining
- Pervious material
- Impervious material

NOTES:

1- All cut side slopes to be directed by the engineer.
2- All "V" ditches dimensions to be determined by the engineer.
3- "H", "Y", "Fb", "di" and "b" shall be defined by the engineer.

REFERENCE DWGS For general notes see dwg № 20/2/1/01 TO 20/2/1/03
See also dwg № 19/3/1/02

Scale: 1:50	IRRIGATION & DRAINAGE STANDARDS		
Date:	DWG. № 19/3/1/01	TYPICAL CANAL SECTION IN FILL & CUT WITH EARTH LINING	
Approved:	Sheet № 1 of 2	Rev.№	

ISLAMIC REPUBLIC OF IRAN
MINISTRY OF PLAN & BUDJE
TECHNICAL RESEARCH AND STANDARD BUREAU

omoorepeyman.ir

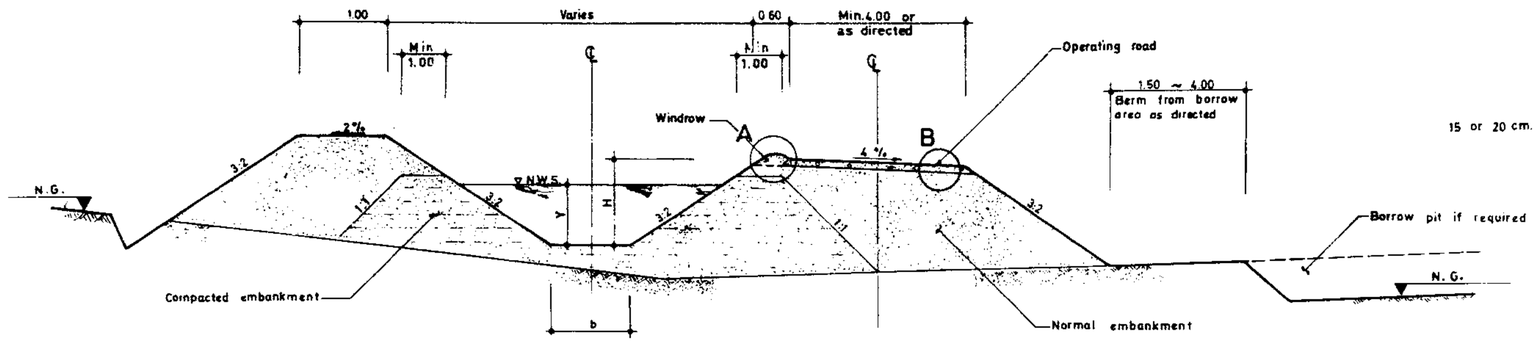

TYPICAL UNLINED CANAL SECTION TOTALY IN FILL

Scale 1:100

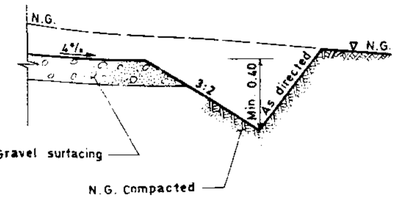

DETAIL C

Scale 1:25

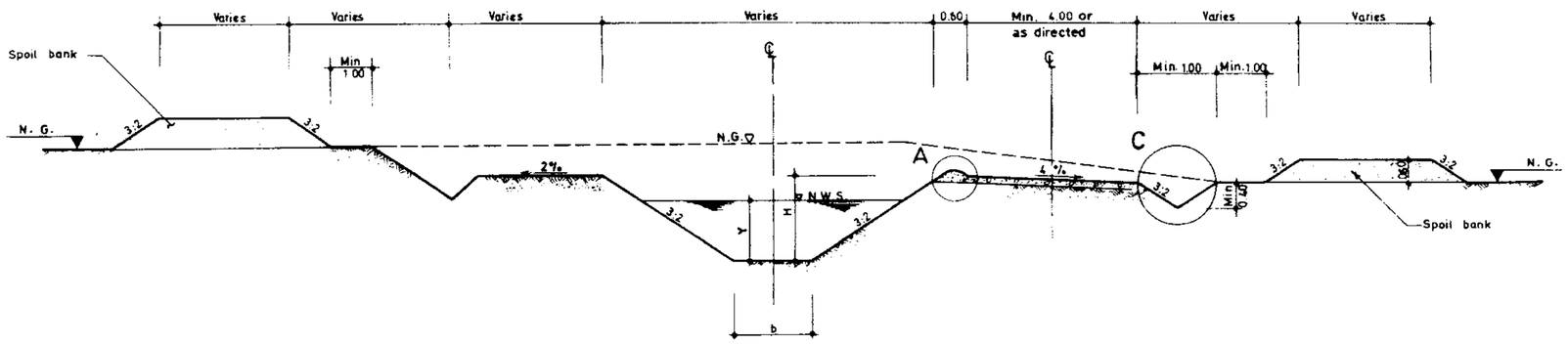

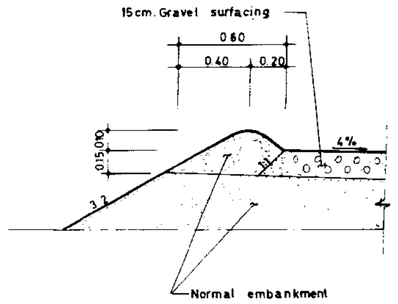

DETAIL A

Scale 1:25

TYPICAL UNLINED CANAL SECTION IN CUT

Scale 1:100

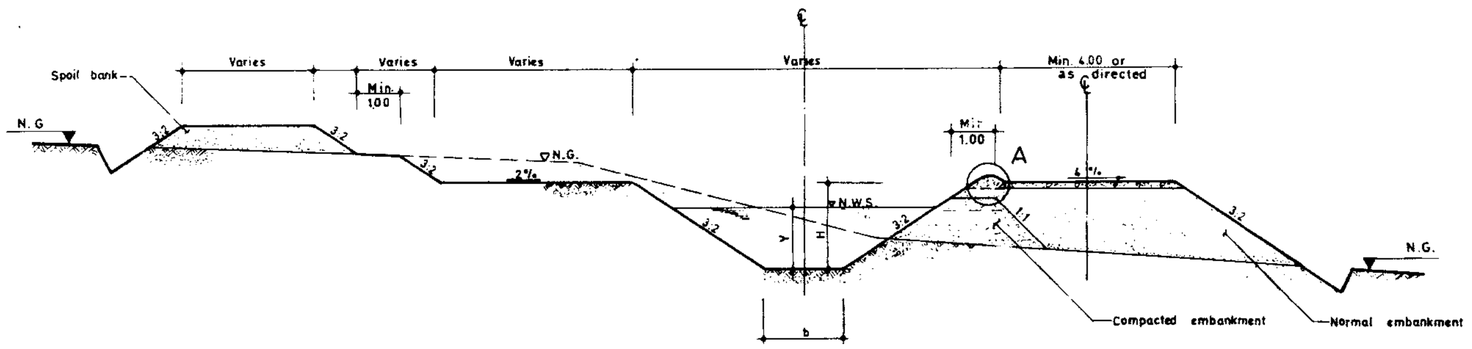

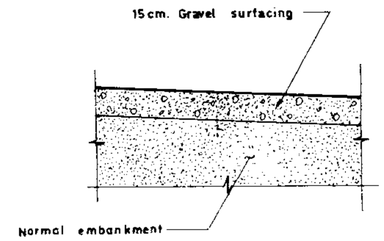

DETAIL B

Scale 1:25

TYPICAL UNLINED CANAL SECTION IN CUT AND PARTIAL FILL

Scale 1:100

NOTES:

1. All cut side slopes to be directed by the engineer.
2. All "Y" ditches dimensions to be determined by the engineer.
3. "H", "Y" and "b" shall be defined by the engineer.

REFERENCE DWGS: For general notes see dwgs. № 20/2/1/01 TO 20/2/1/03

Scale: 1:100_1:25	IRRIGATION & DRAINAGE STANDARDS		ISLAMIC REPUBLIC OF IRAN MINISTRY OF PLAN & BUDJET TECHNICAL RESEARCH AND STANDARD BUREAU
Date:	DWG № 19/1/1/01	TYPICAL UNLINED CANAL SECTIONS	
Approved:	Sheet № 1 of 1	Rev №	

omoorepeyman.ir

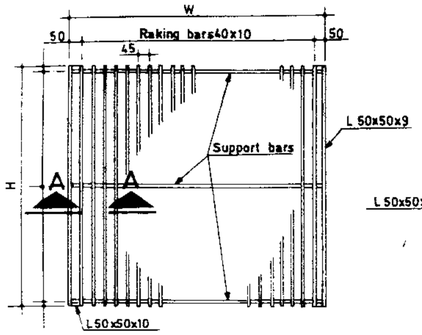

PLAN
(GRATING) Scale 1:20

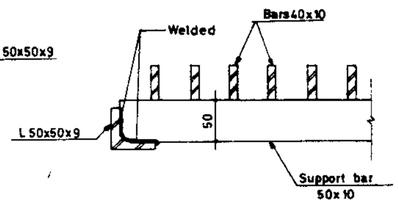

SECTION A_A
Scale 1:5

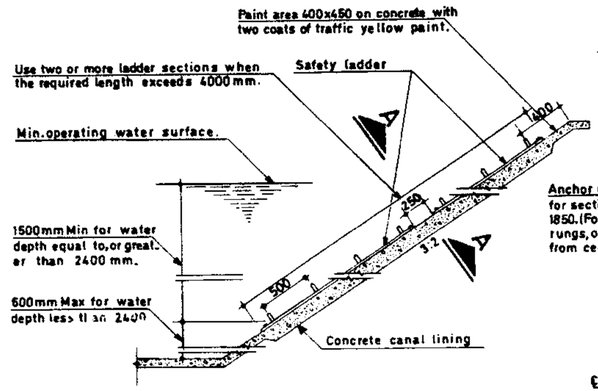

PREFABRICATED LADDER
Not to scale

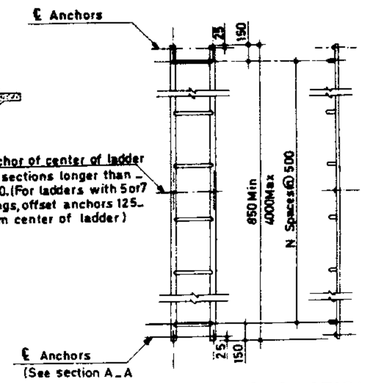

LADDER SECTION
Not to scale

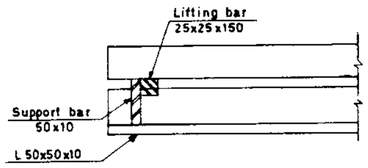

SECTION C_C
Scale 1:5

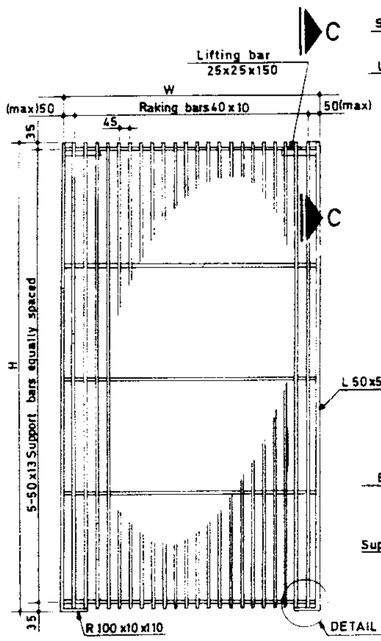

PLAN
(TRASHRACK) Scale 1:20

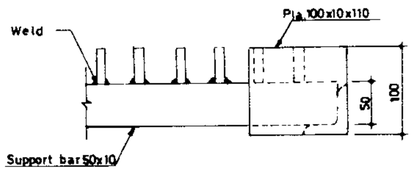

VIEW D_D
Scale 1:5

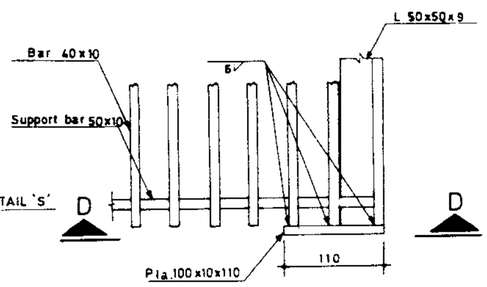

DETAIL S
Scale 1:5

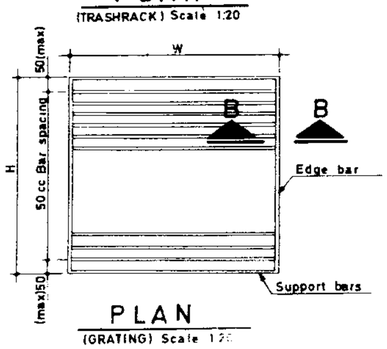

PLAN
(GRATING) Scale 1:20

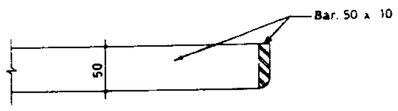

SECTION B_B
Scale 1:5

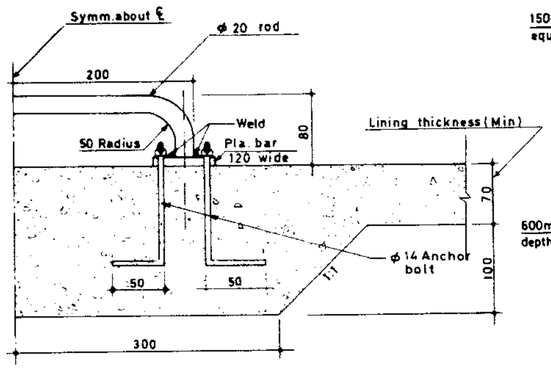

SECTION A_A
Scale 1:5

NOTES :

① Ladder to be used on sides of canal where the vertical lining height is 0.75 m or more.

② Ladders to be located opposite each other at 220 m inverval on each side of the canal, and upstream of structures as directed.

③ Ladders to be fabricated from steel or aluminum.

④ Ladders shall be anchored to the canal lining with stainless steel expansion type or impact type anchors, subject to the approval of the contracting officer.

⑤ Ladders to be painted yellow after fabrication.

⑥ W and H shall be determined base on field conditions

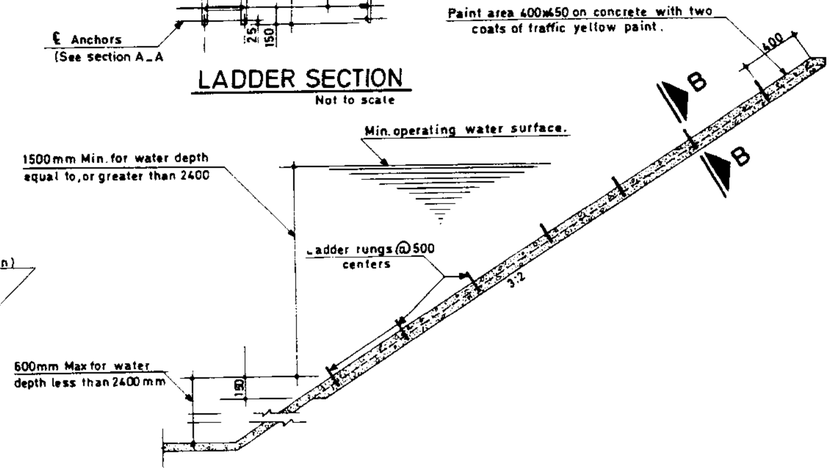

INSTALLATION DETAIL
(LADDER RUNG) Not to scale

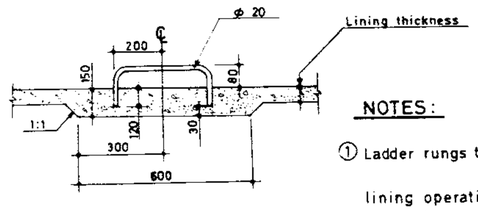

SECTION B_B
Not to scale

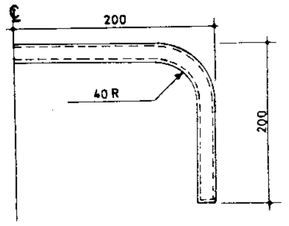

LADDER RUNG
Not to scale

NOTES :

① Ladder rungs to be placed during concrete lining operations, located opposite each other at 220 m. inverals on each side of the canal, and upstream of structures as directed.

② Ladder rungs are not required on sides of canals where the vertical lining height is less than 0.75 m.

③ All dimensions are in mm. except otherwise shown.

REFERENCE DWGS :

Scale : 1:20, 1:5	IRRIGATION & DRAINAGE STANDARDS		
Date :	DWG. Nº 18/3/1/01		GRATING, TRASHRACK AND LADDER PLANS, SECTIONS AND DETAILS
Approved :	Sheet. Nº 1 of 1	Rev Nº	

ISLAMIC REPUBLIC OF IRAN
MINISTRY OF PLAN & BUDJET
TECHNICAL RESEARCH AND STANDARDS BUREAU

omoorepeyman.ir

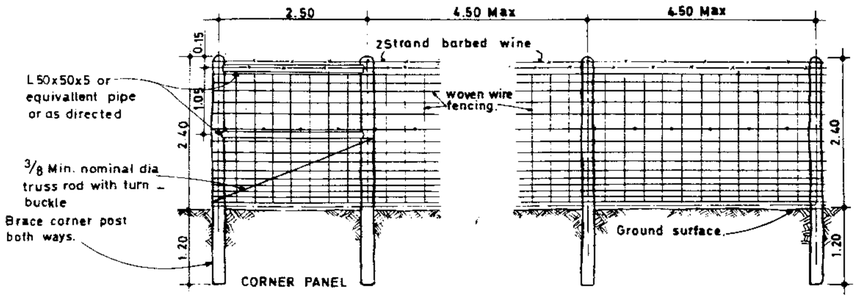

ANIMAL PROOF FENCING

Not to scale

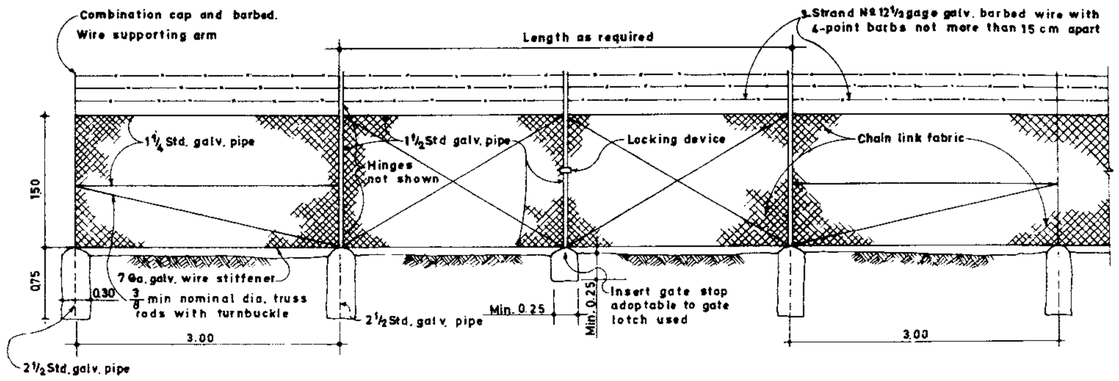

GATE AND ADJOINING PANELS

Scale 1:50

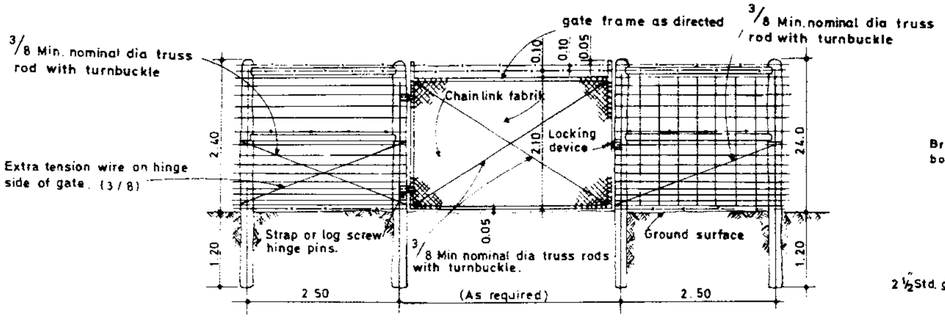

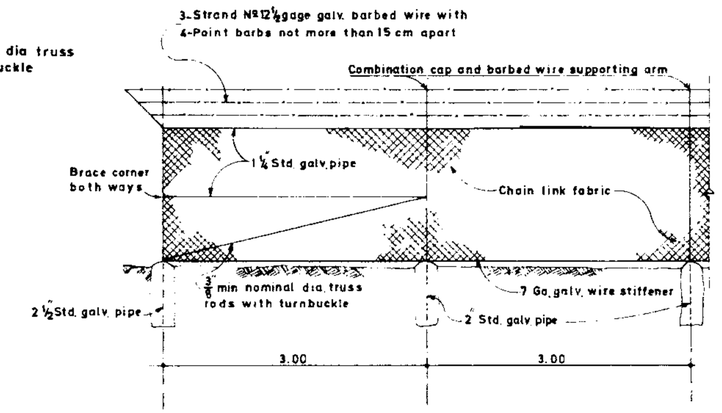

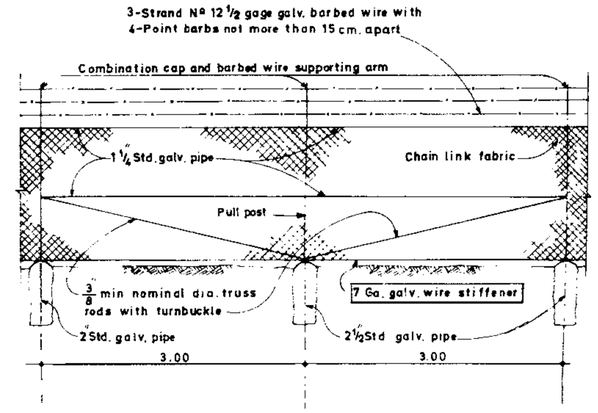

GATE AND ADJOINING PANELS

Not to scale

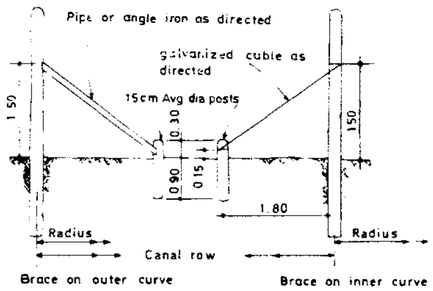

BRACE POSTS ON CURVE

Not to scale

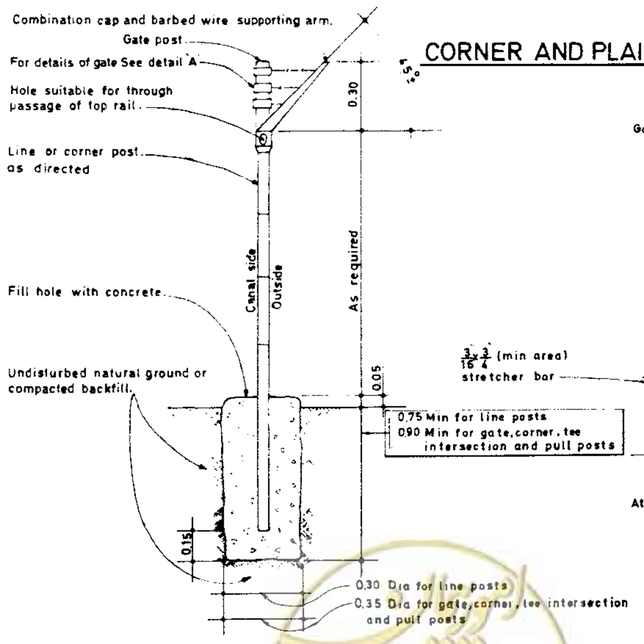

TYPICAL SECTION

Scale 1:20

CORNER AND PLAIN PANELS

Scale 1:50

PANELS ADJOINING PULL POST

Scale 1:50

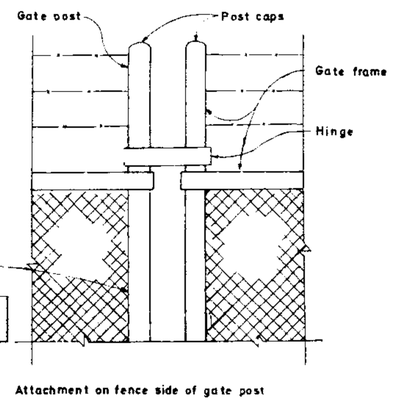

DETAIL 'A'

Not to scale

NOTES:

1. Maximum length of fence without a corner, end, gate, or brace post shall be 300 m
2. Additional brace posts shall be placed where directed by the engineer
3. Fence on curve shall have brace posts spaced as follows:
   - Curve radius less than 150 m, every 2nd post.
   - Curve radius 150–300 m, every 5th post.
   - Curve radius over 300 m, every 7th post.
   - All wood posts to be placed with butt end down. All wood posts to be placed in undisturbed natural ground or compacted fill.
   - Woven wire fencing sall have Nº 10 gage top and bottom wires with Nº 12½ gage intermediate and stay wires, spacing of stays shall be 30 cm.
   - Chain link fabric shall be attached to gate fromework in accordance with the manufacturers standard instructions.
4. This drawing has been prepared for wooden post. There is no restriction for other material such as angle iron steel pipe or concrete posts.

NOTES:

1. All pipe diameters shown are iron pipe sizes, standard weight.
2. Maximum interval between pull posts 60 m.
3. Barbed wire guard to be mounted vertically on all gate posts.
4. Chain link fabric shall be attached to fence framework in accordance with the manufacturer's standard instructions.
5. Barbed wire supporting arms shall be fabricated from 1½ inch pipe.
6. They shall be welded in place or otherwise secured to prevent rotation.
7. School safety fence 210 high. Urban safety fence 150 high.

REFERENCE DWGS:

Scale: 1:50, 1:20	IRRIGATION & DRAINAGE STANDARDS		
Date:	DWG.Nº 18/1/1/01		FENCE
Approved:	Sheet.Nº 1 of 1	Rev.Nº	

ISLAMIC REPUBLIC OF IRAN
MINISTRY OF PLAN & BUDGET
TECHNICAL RESEARCH AND STANDARD BUREAU

omoorepeyman.ir

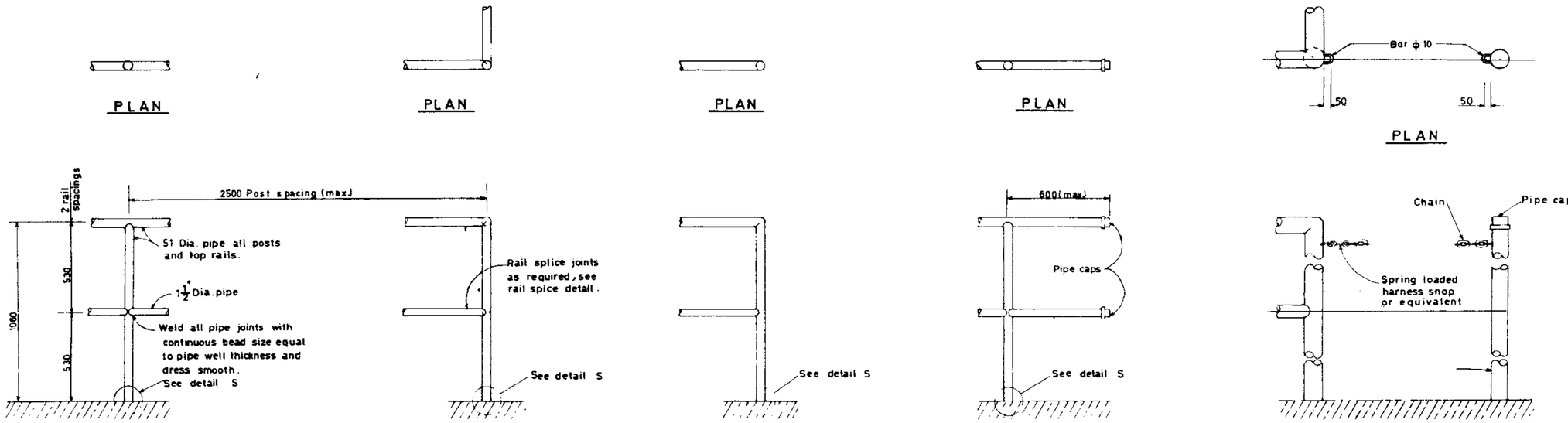

Elevation

PIPE HANDRAIL DETAILS

Scale 1:20

Elevation

GUARD CHAIN DETAIL

Scale 1:10

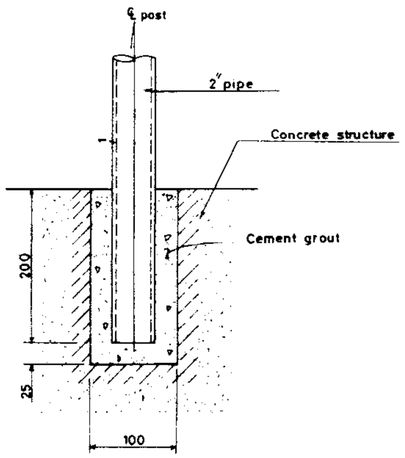

DETAIL S

Scale 1:5

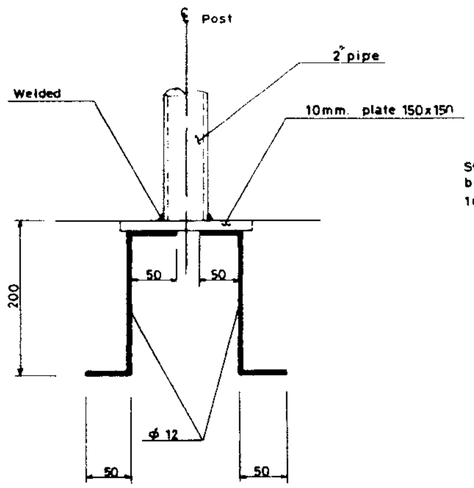

BASE PLATE INSTALLATION

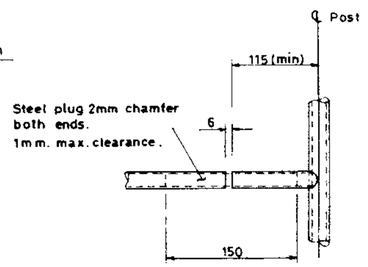

RAIL SPLICE DETAIL

Scale 1:5

NOTES:

1. Where posts are embeded in concretes slabs less than 0.30 deep, maintain 0.025 clear from bottom of blockout to bottom of slab.
2. Where posts are anchored in concrete walls post shall be placed at the centerline of post edge of structure or expansion joint shall be 0.15 meters.
3. All dimensions are in "mm." except otherwise shown.

REFERENCE DWGS:

Scale: 1:20 1:10 1:5	IRRIGATION & DRAINAGE STANDARDS		ISLAMIC REPOBLIC OF IRAN
Date:	DWG. Nº 18/2/1/01	PIPE HANDRAIL, GUARD POST AND GUIDE POST	MINISTRY OF PLAN & BUD.
Approved:	Sheet Nº 1 of 1	Rev. Nº	TECHNICAL RESEARCH AND STANDARD BUREAU

omoorepeyman.ir

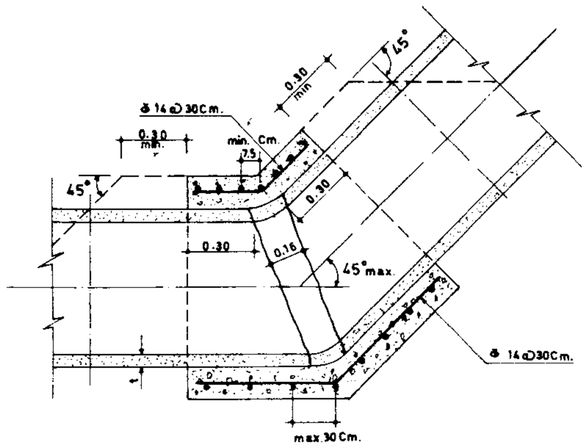

BENDS FOR PRECAST
CONCRETE PRESSURE PIPE. SC.1:20

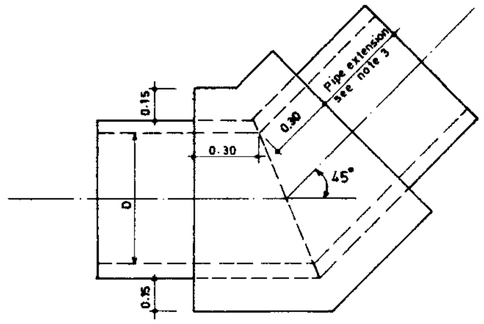

ASBESTOS CEMENT
PIPE SC.1:20

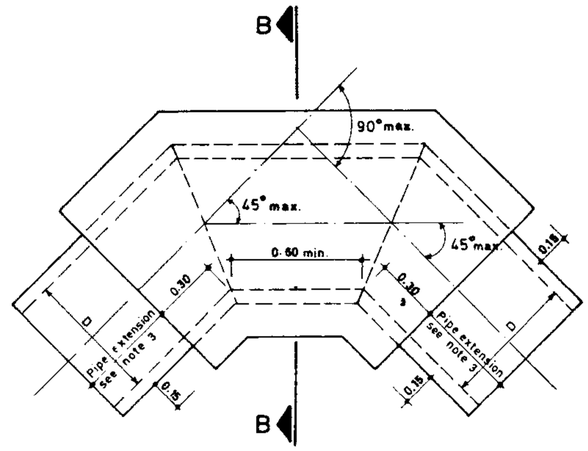

BENDS FOR PRESSURE
SC.1:20

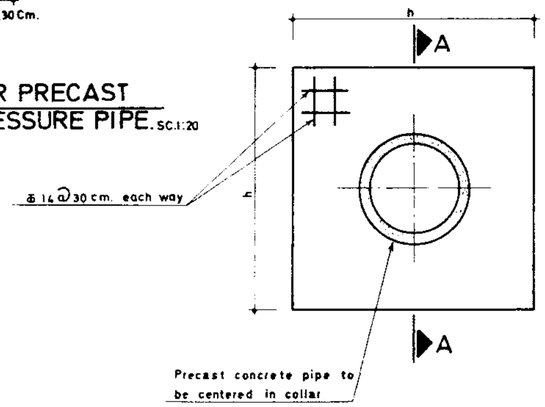

ELEVATION
N.T.S

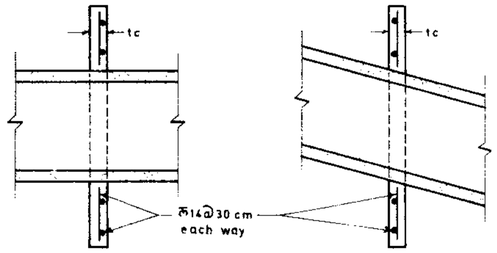

LEVE PIPE SLOPED PIPE

SECTION A_A
N.T.S

DIMENSIONS AND
ESTIMATED QUANTITIES

Dia. m.	h	tc	CONC. m^3	R/Bar kg.	FORM m^2
40	1.40	15			
50	1.60	15			
60	1.80	15			
70	2.00	15			
80	2.20	15			
90	2.40	20			
100	2.40	20			
110	2.60	20			
120	2.70	20			

NOTES:

1- Compact backfill to top of encasement at all bends.
2- Elevation of compacted backfill for bended mitered pipe bends shall be the same as the elevation of compacted backfill specified for the adjacent pipe.
3- Pipe extension shall be 45cm max. when D ≤ 90cm and max. $\frac{1}{2}$ D when D>90cm Min extension shall be 20 cm.

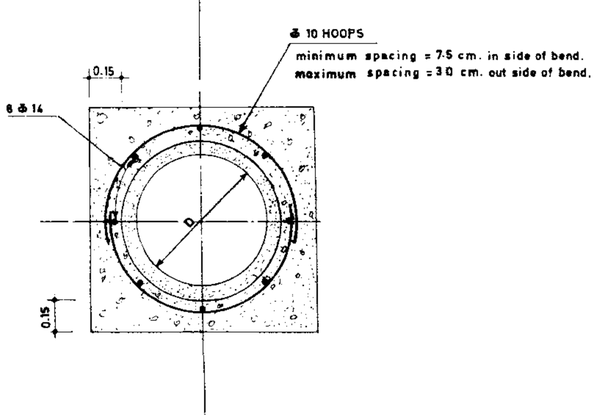

SECTION B-B
SC.1:20

REFERENCE DWGS: For general notes see dwgs Nº 20/2/1/01 TO 20/2/1/03

Scale: 1:20	IRRIGATION & DRAINAGE STANDARDS		
Date:	DWG Nº 17/3/1/01		BEND AND COLLAR FOR PRECAST CONCRETE PRESSURE PIPE
Approved:	Sheet Nº 1 of 1	Rev. Nº	

ISLAMIC REPUBLIC OF IRAN
MINISTRY OF PLAN & BUDJ
TECHNICAL RESEARCH AND STANDARD BUREAU

omoorepeyman.ir

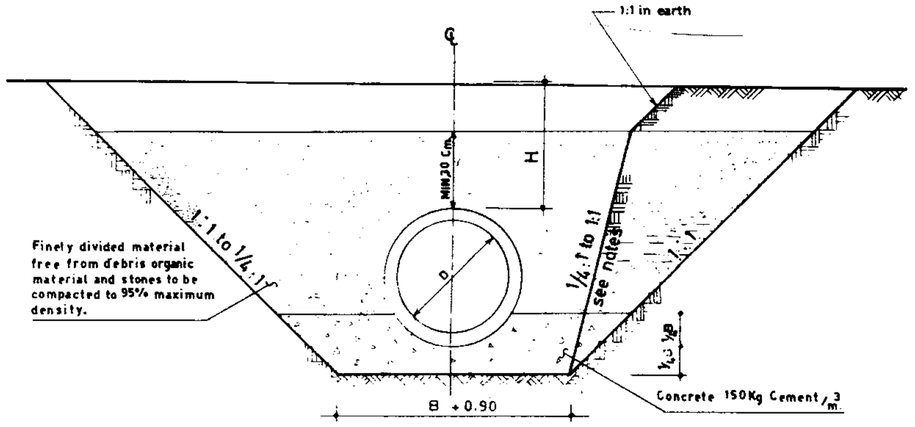

CONCRETE PIPE PLACING TYPE I

$H \leqslant 3.00$m. for pipe group I

$H \leqslant 4.50$m. for pipe group II

$H \leqslant 6.00$m. for pipe group III

Minimum cover = 30 cm.

DEPTH OF BEDDING MATERIAL BELOW PIPE

D	a
60cm. and smaller	8 Cm.
70cm. to 140cm.	10 Cm.

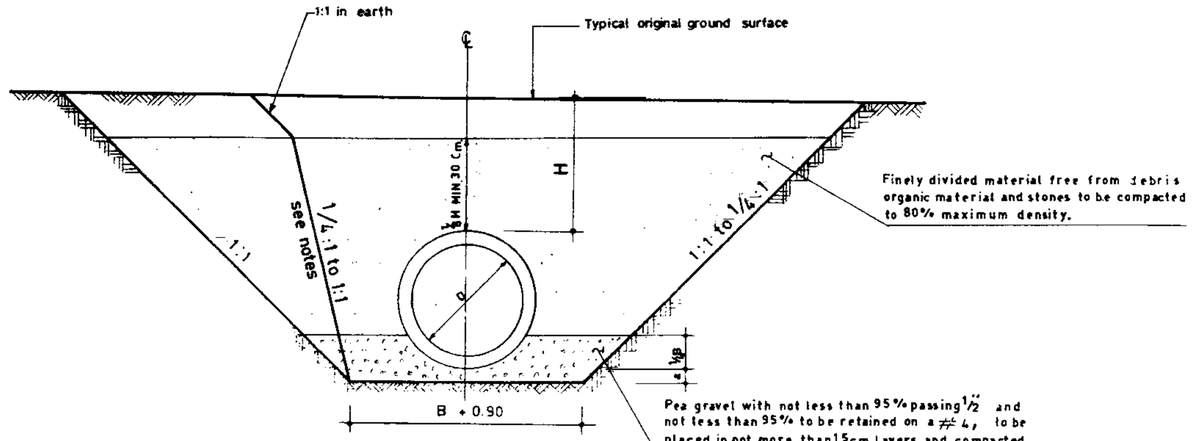

CONCRETE PIPE PLACING TYPE III

$H \leqslant 1.50$ for pipe group I

$H \leqslant 3.00$ for pipe group III

Minimum cover = 15 cm.

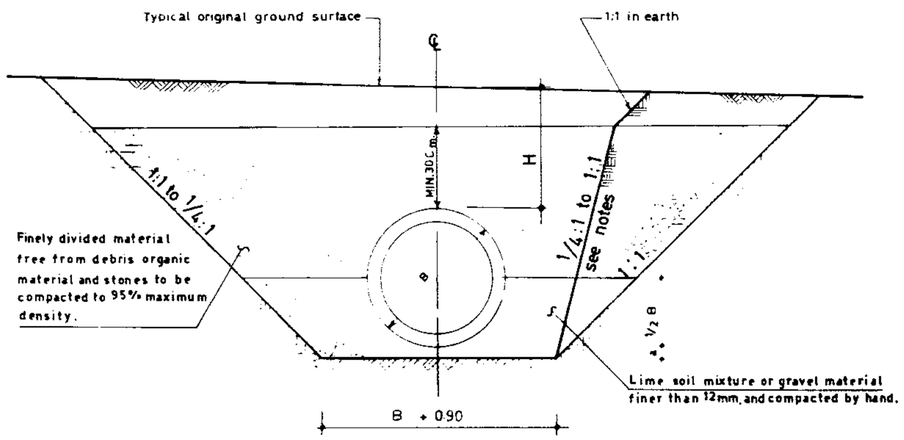

CONCRETE PIPE PLACING TYPE II

$H \leqslant 1.50$m. for pipe group I

$H \leqslant 3.00$m. for pipe group II

$H \leqslant 4.50$m. for pipe group III

Minimum cover = 30 cm.

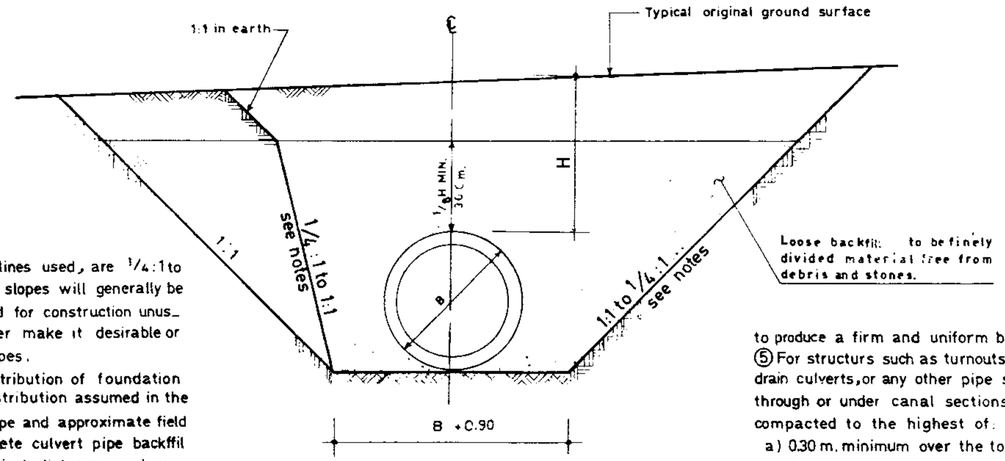

CONCRETE PIPE PLACING TYPE IV

$H \leqslant 1.50$ for pipe group I

$H \leqslant 3.00$ " " " III

Minimum cover = 15 cm.

NOTES:

① Side slope excavation pay lines used, are 1/4:1 to 1:1. These temporay excavation slopes will generally be stable during the time required for construction unusual soil conditions may, however make it desirable or necessary to use flatter slopes.

② To be assured that the distribution of foundation pressures approximates the distribution assumed in the design of concrete pressure pipe and approximate field strength requirements of concrete culvert pipe backffil should be compacted to a vertical distance, as shown on this dwg.

③ In rock or other unsuitable foundation material the trench should be overexcavated to provide a compacted cushion of selected material to furnish a uniform bedding for the pipe.

④ For pipe which is to be placed within canal or roadway embankment, it is commonly required that the embankment material be placed to an elevation approximately one-fourth the diameter of the pipe above the prescribed pipe invert and then excavated carefully to produce a firm and uniform bedding for the pipe.

⑤ For structurs such as turnouts, drain inlets, cross drain culverts, or any other pipe structure which extends through or under canal sections, the backfill should be compacted to the highest of:

a) 0.30 m. minimum over the top of the pipe

b) Original ground surface, or

c) To top of compacted embankment if canal embankement has been compacted prior to construction of the pipe structure.

⑥ For rock or other incompressible materials, the trench should be overexcavated a min of 15cm. and refilled with granular material.

⑦ "D" and "B" are internal and external diam- respectivaly

⑧ "H" is the total fill on top of the pipe.

⑨ Type of pipe group as shown on dwg.t /02 to 17/2/1/04 shall be determind after "H" is found.

REFERENCE DWGS: For general notes see dwgs: 20/2/1/01 TO 20/2/1/03
For pipe group I see dwgs: 17/2/1/02
For pipe group II see dwgs: 17/2/1/03
For pipe group III see dwgs: 17/2/1/04

Scale:	IRRIGATION & DRAINAGE STANDARDS		
Date:	DWG.№ 17/2/1/01		CONCRETE PIPES PIPE PLACING & TRENCH EXCAVATION TYPE I TO TYPE IV
Approved:	Sheet.№ 1 of 4	Rev. №	

ISLAMIC REPUBLIC OF IRAN
MINISTRY OF PLAN & BUD
TECHNICAL RESEARCH AND STANDARDS BUREAU

omoorepeyman.ir

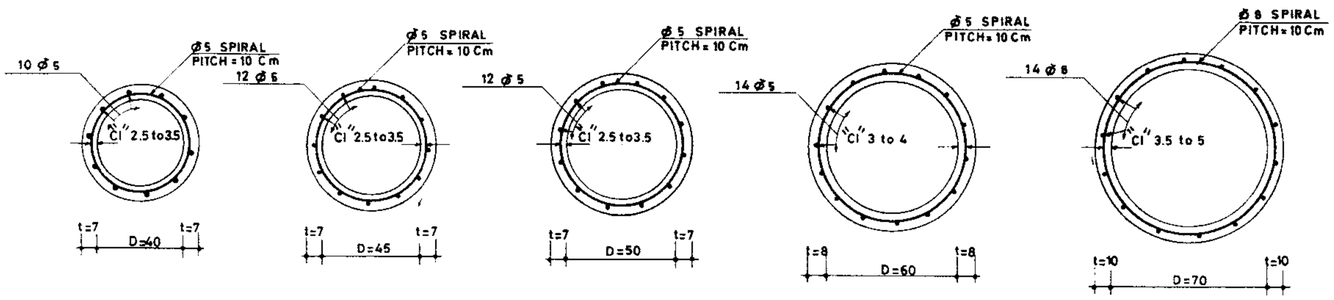

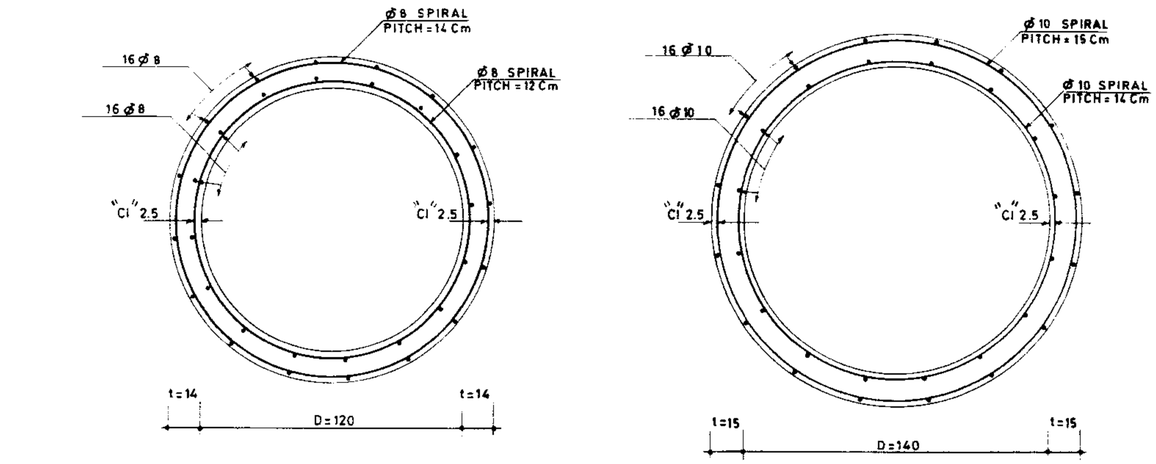

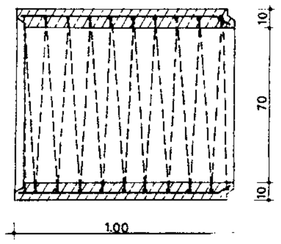

LONG SECTION
Scale 1.20

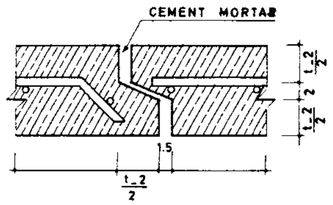

DETAIL A
Scale 1.5

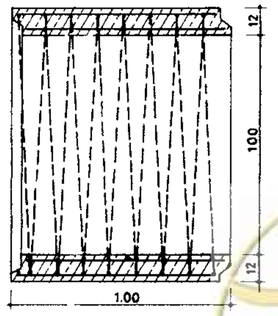

LONG. SECTION
Scale 1.20

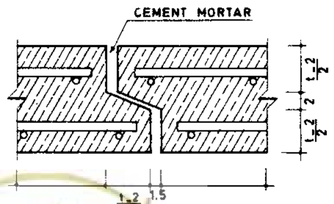

DETAIL A'
Scale 1.5

SINGLE LAYER REINFORCEMENT

Dia.	Pos.	ϕ	Shape	No.	Unit length	Total length	Unit weight	Total weight	Conc m³	Formwork m²
Dia.=40	1	5	0.96	10	0.96	9.60	0.154	1.48	0.1034	3.06
	2	5	0.10 ∿∿∿ 0.48	1	14.79	14.79	0.154	2.28		
Dia.=45	1	5	0.96	12	0.96	11.52	0.154	1.77	0.1144	3.38
	2	5	0.10 ∿∿∿ 0.53	1	16.27	16.27	0.154	2.51		
Dia.=50	1	5	0.96	12	0.96	11.52	0.154	1.77	0.1253	3.71
	2	5	0.10 ∿∿∿ 0.58	1	17.75	17.75	0.154	2.73		
Dia.=60	1	5	0.96	14	0.96	13.44	0.154	2.07	0.1709	4.44
	2	5	0.10 ∿∿∿ 0.69	1	21.03	21.03	0.154	3.24		
Dia.=70	1	8	0.96	14	0.96	13.44	0.395	5.31	0.2513	5.28
	2	8	0.10 ∿∿∿ 0.82	1	24.91	24.91	0.395	9.84		
Dia.=80	1	8	0.96	14	0.96	13.44	0.395	5.31	0.2827	5.94
	2	8	0.10 ∿∿∿ 0.92	1	27.91	27.91	0.395	11.02		

DOUBLE LAYERS REINFORCEMENT

Dia.	Pos.	ϕ	Shape	No.	Unit length	Total length	Unit weight	Total weight	Conc. m³	Formwork m²
Dia.=90	1	5	0.91	16	0.91	14.56	0.154	2.24	0.3142	6.60
	2	5	0.91	16	0.91	14.56	0.154	2.24		
	3	5	0.10 ∿∿∿ 1.04	1	29.87	29.87	0.154	4.60		
	4	5	0.07 ∿∿∿ 0.96	1	39.31	39.31	0.154	6.05		
Dia.=100	1	5	0.91	16	0.91	14.56	0.154	2.24	0.4222	7.46
	2	8	0.91	16	0.91	14.56	0.395	5.75		
	3	5	0.07 ∿∿∿ 1.17	1	47.93	47.93	0.154	7.38		
	4	8	0.12 ∿∿∿ 1.07	1	25.65	25.65	0.395	10.13		
Dia.=120	1	8	0.91	16	0.91	14.56	0.395	5.75	0.5894	9.01
	2	8	0.91	16	0.91	14.56	0.395	5.75		
	3	8	0.14 ∿∿∿ 1.41	1	28.94	28.94	0.395	11.43		
	4	8	0.12 ∿∿∿ 1.27	1	30.39	30.39	0.395	12.00		
Dia.=140	1	10	0.91	16	0.91	14.56	0.617	8.98	0.7304	10.47
	2	10	0.91	16	0.91	14.56	0.617	8.98		
	3	10	0.15 ∿∿∿ 1.63	1	31.20	31.20	0.617	19.25		
	4	10	0.14 ∿∿∿ 1.47	1	30.15	30.15	0.617	18.60		

REFERENCE DWGS: For general notes see dwgs : Nº 20/2/1/01 TO 20/2/1/03

Scale: 1:5 _ 1:20

Date:

Approved:

IRRIGATION & DRAINAGE STANDARDS

DWG. Nº. 17/2/1/02

Sheet.Nº. 2 of 4 | Rev. Nº.

CONCRETE PIPES
REINFORCEMENT GROUP 1

ISLAMIC REPUBLIC OF IRAN
MINISTRY OF PLAN & BUDGET
TECHNICAL RESEARCH AND STANDARD BUREAU

omoorepeyman.ir

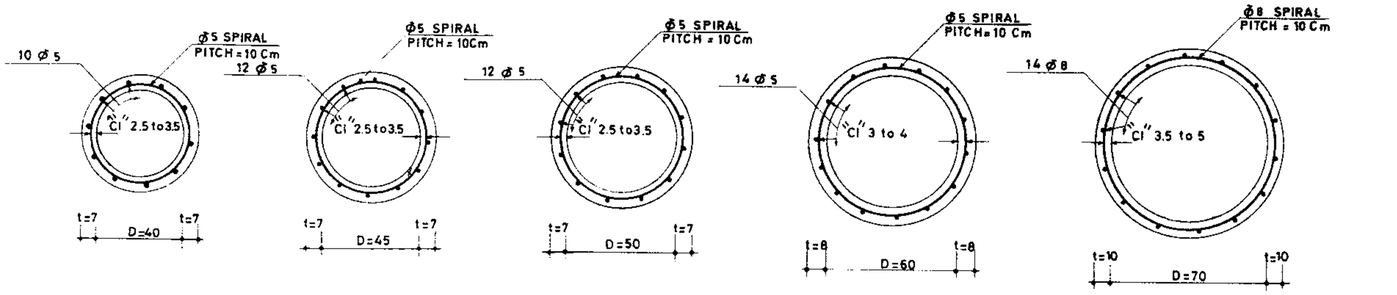

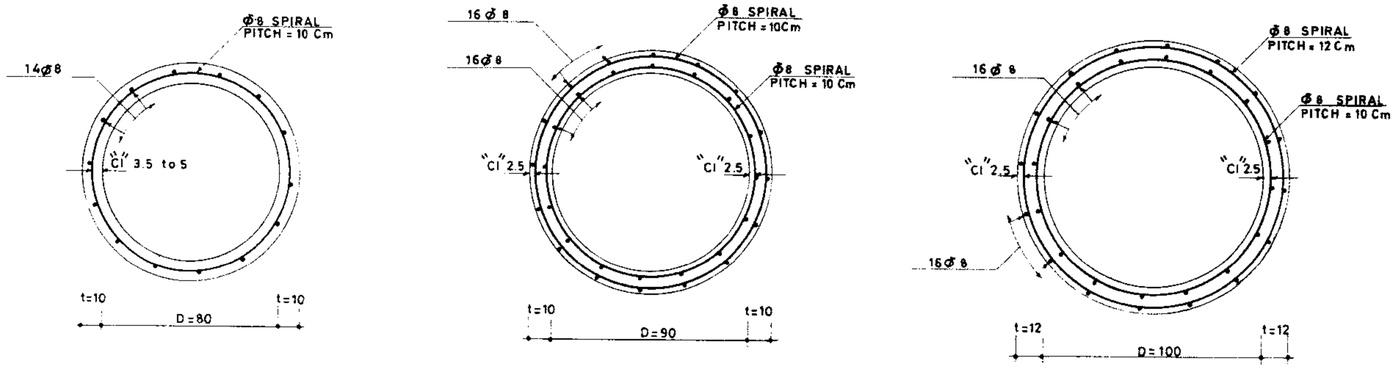

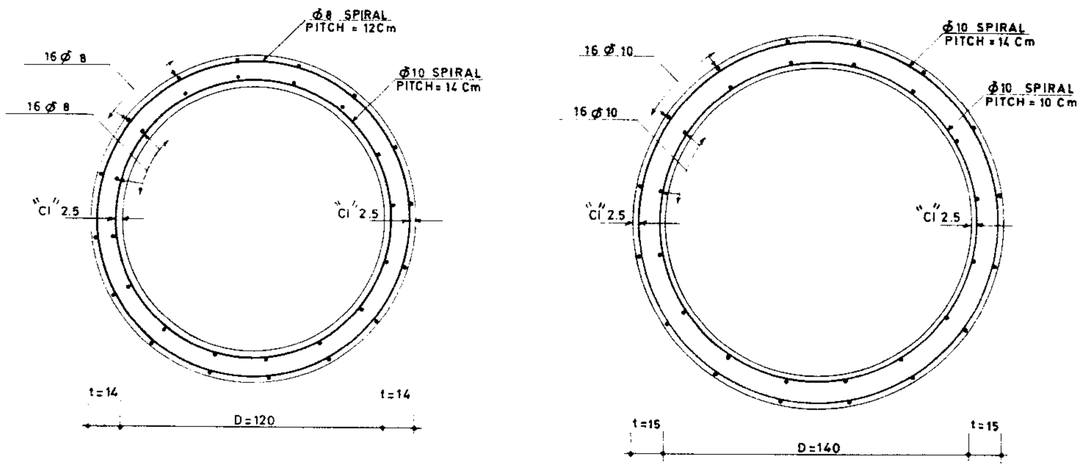

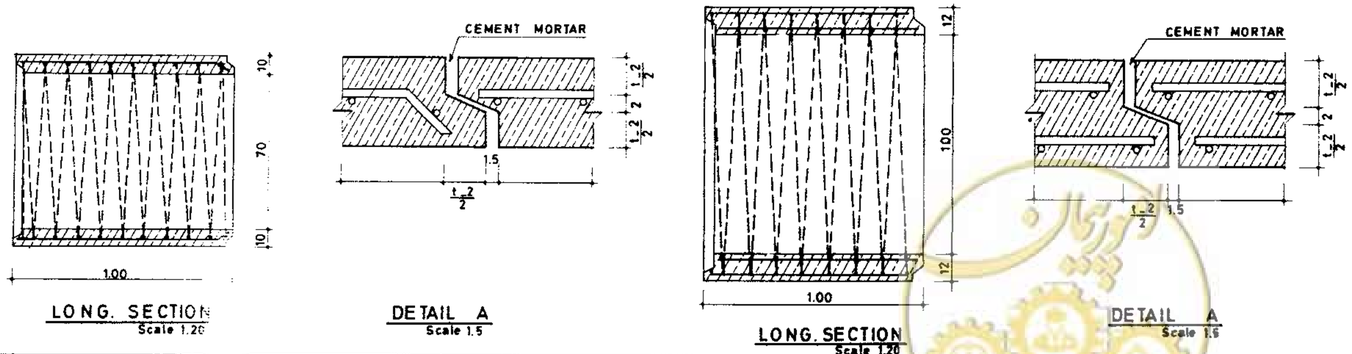

SINGLE LAYER REINFORCEMENT

Dia.	Pos.	ϕ	Shape	Nº	Unit length	Total length	Unit weight	Total weight	Conc m³	Form-work m²
Dia=40	1	5	0.96	10	0.96	9.60	0.154	1.48	0.1034	3.06
	2	5	0.10 ~ 0.48	1	14.79	14.79	0.154	2.28		
Dia=45	1	5	0.96	12	0.96	11.52	0.154	1.77	0.1144	3.38
	2	5	0.10 ~ 0.53	1	16.27	16.27	0.154	2.51		
Dia=50	1	5	0.96	12	0.96	11.52	0.154	1.77	0.1253	3.71
	2	5	0.10 ~ 0.58	1	17.75	17.75	0.154	2.73		
Dia=60	1	5	0.96	14	0.96	13.44	0.154	2.07	0.1709	4.44
	3	5	0.10 ~ 0.69	1	21.03	21.03	0.154	3.24		
Dia=70	1	8	0.96	14	0.96	13.44	0.395	5.31	0.2513	5.28
	2	8	0.10 ~ 0.82	1	24.91	24.91	0.395	9.84		
Dia=80	1	8	0.96	14	0.96	13.44	0.395	5.31	0.2827	5.94
	2	8	0.10 ~ 0.92	1	27.91	27.91	0.395	11.02		

DOUBLE LAYERS REINFORCEMENT

Dia	Pos	ϕ	Shape	Nº	Unit length	Total length	Unit weight	Total weight	Conc m³	Form-work m²
Dia=90	1	8	0.91	16	0.91	14.56	0.395	5.75	0.3142	6.60
	2	8	0.91	16	0.91	14.5	0.395	5.75		
	3	8	0.10 ~ 1.03	1	29.58	29.58	0.395	11.69		
	4	8	0.10 ~ 0.97	1	27.88	27.88	0.395	11.01		
Dia=100	1	8	0.91	16	0.91	14.56	0.395	5.75	0.4222	7.46
	2	8	0.91	16	0.91	14.56	0.395	5.75		
	3	8	0.12 ~ 1.17	1	29.58	29.58	0.395	11.69		
	4	8	0.10 ~ 1.07	1	27.88	27.88	0.395	11.01		
Dia=120	1	8	0.91	16	0.91	14.56	0.395	5.75	0.5894	9.01
	2	8	0.91	16	0.91	14.56	0.395	5.75		
	3	8	0.12 ~ 1.41	1	33.71	33.71	0.395	13.32		
	10	10	0.14 ~ 1.27	1	36.42	36.42	0.617	22.47		
Dia=140	1	10	0.91	16	0.91	14.56	0.617	8.98	0.7304	
	2	10	0.91	16	0.91	14.56	0.617	8.98		
	3	10	0.14 ~ 1.63	1	33.41	33.41	0.617	20.61		
	4	10	0.10 ~ 1.47	1	42.12	42.12	0.617	25.99		

REFERENCE DWGS: For general notes see dwgs : Nº 20/2/1/01 TO 20/2/1/03

Scale: 1:5 _ 1:20	IRRIGATION & DRAINAGE STANDARDS	
Date:	DWG. Nº. 17/2/1/03	CONCRETE PIPES REINFORCEMENT PIPE GROUP 2
Approved:	Sheet Nº. 3 of 4 Rev. Nº.	

ISLAMIC REPUBLIC OF IRAN
MINISTRY OF PLAN & BUDGET
TECHNICAL RESEARCH AND STANDARD BUREAU

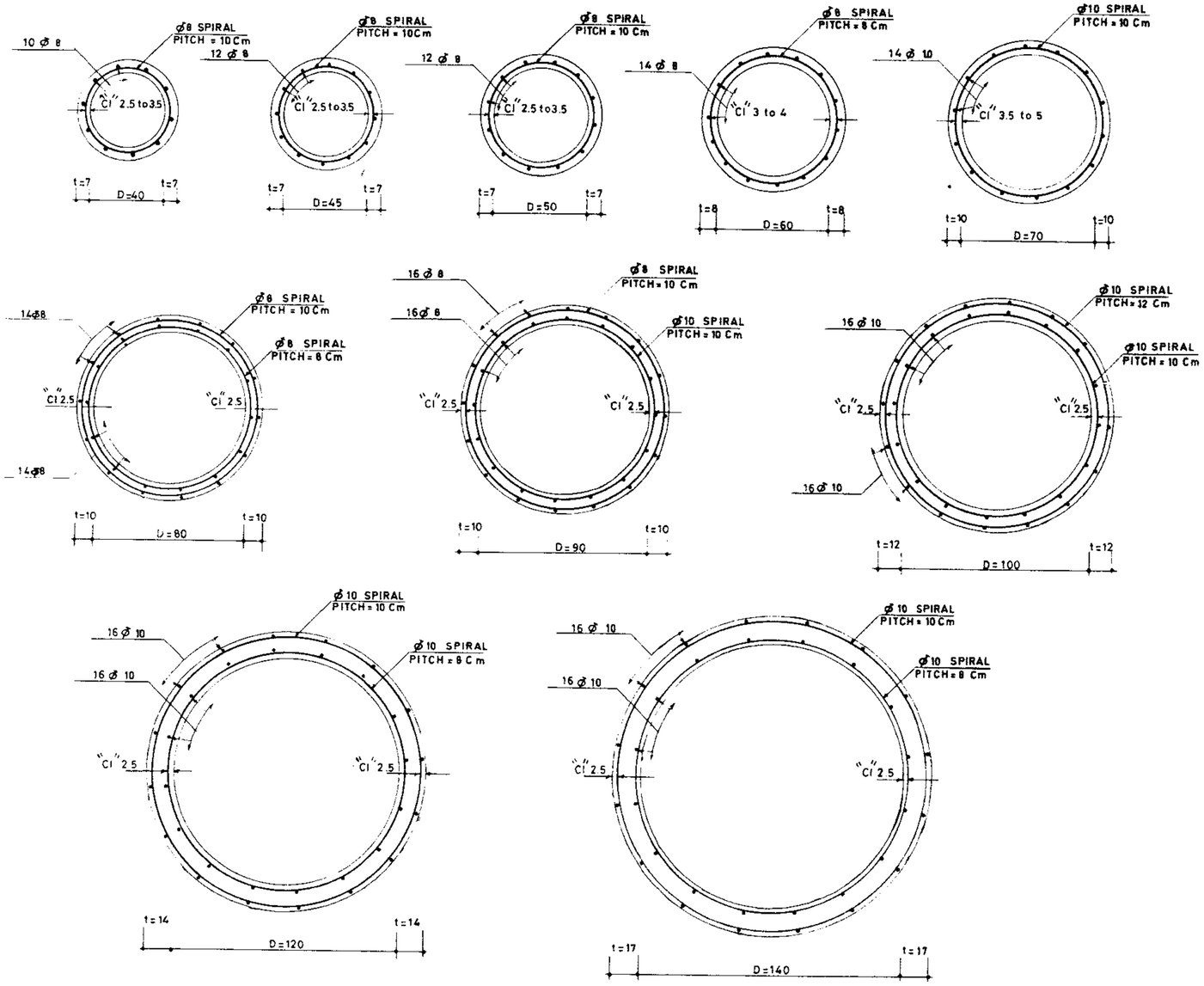

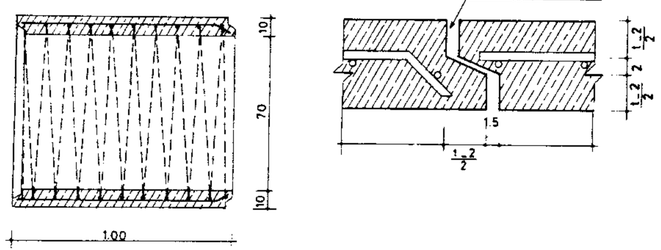

LONG. SECTION
Scale 1:20

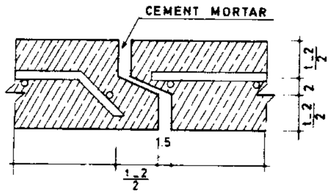

DETAIL A
Scale 1:5

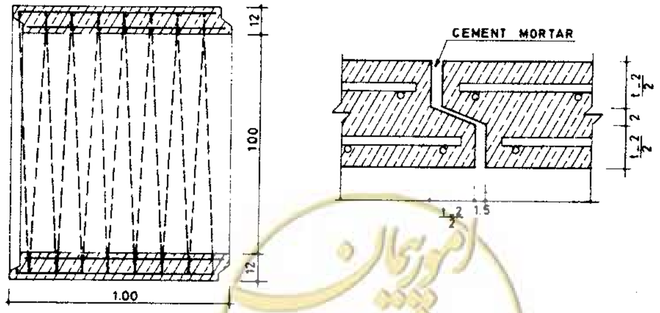

LONG. SECTION
Scale 1:20

SINGLE LAYER REINFORCEMENT

Dia.	Pos.	ϕ	Shape	No.	Unit length	Total length	Unit weight	Total weight	Conc. m^3	Form-work m^2
Dia=40	1	8	0.96	10	0.96	9.60	0.395	3.79	0.1034	3.06
	2	8	0.10 ~ 0.49	1	15.08	15.08	0.395	5.96		
Dia=45	1	8	0.96	12	0.96	11.52	0.395	4.55	0.1144	3.38
	2	8	0.10 ~ 0.54	1	16.56	16.56	0.395	6.54		
Dia=50	1	8	0.96	12	0.96	11.52	0.395	4.55	0.1253	3.71
	2	8	0.10 ~ 0.59	1	18.05	18.05	0.395	7.13		
Dia=60	1	8	0.96	14	0.96	13.44	0.395	5.31	0.1709	4.44
	2	8	0.08 ~ 0.70	1	26.57	26.57	0.395	10.50		
Dia=70	1	10	0.96	14	0.96	13.44	0.617	8.29	0.2513	5.28
	2	10	0.10 ~ 0.82	1	24.91	24.91	0.617	15.37		

DOUBLE LAYERS REINFORCEMENT

Dia.	Pos.	ϕ	Shape	No.	Unit length	Total length	Unit weight	Total weight	Conc. m^3	Form-work m^2
Dia=80	1	8	0.91	14	0.91	12.74	0.395	5.03	0.2827	5.94
	2	8	0.91	14	0.91	12.74	0.395	5.03		
	3	8	0.10 ~ 0.93	1	26.73	26.73	0.395	10.56		
	4	8	0.08 ~ 0.87	1	31.22	31.22	0.395	12.33		
Dia=90	1	8	0.91	16	0.91	14.56	0.395	5.75	0.3142	6.60
	2	8	0.91	16	0.91	14.56	0.395	5.75		
	3	8	0.10 ~ 1.03	1	29.58	29.58	0.395	11.69		
	4	10	0.10 ~ 0.97	1	27.86	27.86	0.617	17.19		
Dia=100	1	10	0.91	16	0.91	14.56	0.617	8.98	0.4222	7.46
	2	10	0.91	16	0.91	14.56	0.617	8.98		
	3	10	0.12 ~ 1.17	1	28.05	28.05	0.617	17.31		
	4	10	0.10 ~ 1.07	1	30.72	30.72	0.617	18.96		
Dia=120	1	10	0.91	16	0.91	14.56	0.617	8.98	0.5894	9.01
	2	10	0.91	16	0.91	14.56	0.617	8.98		
	3	10	0.10 ~ 1.41	1	40.41	40.41	0.617	24.93		
	4	10	0.08 ~ 1.27	1	45.30	45.30	0.617	27.95		
Dia=140	1	10	0.91	16	0.91	14.56	0.617	8.98	0.8385	10.70
	2	10	0.91	16	0.91	14.56	0.617	8.98		
	3	10	0.10 ~ 1.67	1	47.86	47.86	0.617	29.53		
	4	10	0.08 ~ 1.47	1	52.63	52.63	0.617	32.47		

REFERENCE DWGS: For general notes see dwg:No. 20/2/1/01 TO 20/2/1/03

Scale: 1:5_1:20	IRRIGATION & DRAINAGE STANDARDS		
Date:	DWG. No. 17/2/1/04		CONCRETE PIPES REINFORCEMENT GROUP 3
Approved:	Sheet.No. 4 of 4	Rev. No.	

ISLAMIC REPUBLIC OF IRAN
MINISTRY OF PLAN & BUDGET
TECHNICAL RESEARCH AND STANDARD BUREAU

omoorepeyman.ir

NOTE :

Extra concrete thickness around pipe connection can be eliminated by the engineer if required

STANDARD PIPE CONNECTIONS TO HEADWALL & STRUCTURES

Dia.	t	α=Variable			α= 2.5°				α= 5°				α= 7.5°				α=10°				α=12.5°				α= 15°				α=17.5°				α=20°				α=22.5°			
Cm.	Cm.	g	s	T	w	x	y	z	w	x	y	z	w	x	y	z	w	x	y	z	w	x	y	z	w	x	y	z	w	x	y	z	w	x	y	z	w	x	y	z
40	7	60	10	15	47.04	2.05	2.05	13.00	47.18	4.10	4.11	15.98	47.41	6.13	6.19	18.92	47.73	8.16	8.29	21.83	48.14	10.17	10.42	24.69	48.66	12.16	12.59	26.22	49.28	14.13	14.82	30.28	50.02	16.07	17.11	32.99	50.87	17.99	19.47	35.65
45	7	60	10	15	52.05	2.22	2.27	13.22	52.20	4.53	4.55	16.41	52.45	6.79	6.85	19.58	52.80	9.03	9.17	22.70	53.26	11.25	11.53	25.77	53.83	13.46	13.93	28.81	54.52	15.64	16.40	31.79	55.34	17.79	18.93	34.71	56.28	19.90	21.54	37.56
50	7	60	10	15	57.05	2.49	2.49	13.44	57.22	4.97	4.99	16.85	57.49	7.44	7.50	20.23	57.88	9.9	10.05	23.57	58.38	12.34	12.64	26.86	59.01	14.75	15.27	30.10	59.77	17.14	17.97	33.29	60.66	19.50	20.75	36.42	61.70	21.81	23.61	39.47
60	8	60	10	15	68.06	2.97	2.97	14.01	68.26	5.93	5.95	17.90	68.59	8.88	8.95	21.80	69.05	11.81	11.99	25.65	69.65	14.72	15.08	29.46	70.40	17.60	18.22	33.21	71.30	20.45	21.44	36.90	72.36	23.26	24.75	40.52	73.60	26.02	28.17	44.06
70	10	80	15	20	80.08	3.49	3.49	19.78	80.31	6.97	7.00	24.53	80.69	10.44	10.53	29.23	81.23	13.89	14.11	33.87	81.94	17.32	17.74	38.46	82.82	20.71	21.44	42.95	83.88	24.06	25.22	47.39	85.13	27.36	29.12	51.72	86.59	30.61	33.14	55.95
80	10	80	15	20	90.09	3.93	3.93	20.22	90.34	7.84	7.87	25.40	90.78	11.75	11.85	30.54	91.39	15.63	15.87	35.61	92.19	19.48	19.95	40.62	93.17	23.29	24.12	45.54	94.37	27.06	28.38	50.39	95.78	30.78	32.76	55.14	97.42	34.44	37.28	59.78
90	10	80	20	20	100.1	4.36	4.37	25.65	100.38	8.72	8.75	31.26	100.86	13.05	13.17	36.79	101.54	17.36	17.63	42.27	102.43	21.64	22.17	47.66	103.53	25.68	26.79	52.96	104.83	30.07	31.53	58.17	106.42	34.20	36.40	63.25	108.24	38.27	41.42	68.23
100	12	80	20	20	112.11	4.89	4.89	26.27	112.43	9.76	9.80	32.47	112.97	14.62	14.75	38.63	113.73	19.45	19.75	44.70	114.72	24.24	24.83	50.69	115.95	28.99	30.01	56.59	117.44	33.68	35.31	62.38	119.19	38.31	40.76	68.05	121.23	42.86	46.39	73.58
120	14	80	20	20	134.13	5.86	5.85	27.30	134.51	11.68	11.72	34.57	135.16	17.49	17.64	41.76	136.07	23.27	23.63	48.87	137.25	29.00	29.71	55.88	138.73	34.68	35.91	62.80	140.50	40.29	42.25	69.59	142.60	45.83	48.77	76.25	145.04	51.28	55.50	82.27
140	15	80	20	20	155.15	6.76	6.77	28.27	155.59	13.51	13.56	39.46	156.34	20.23	20.41	44.63	157.39	26.92	27.33	52.69	158.76	33.55	34.36	60.65	160.47	40.12	41.53	68.50	162.52	46.61	48.87	76.21	164.95	53.01	56.42	83.77	167.77	59.32	64.20	91.19

All dimensions are in cm.

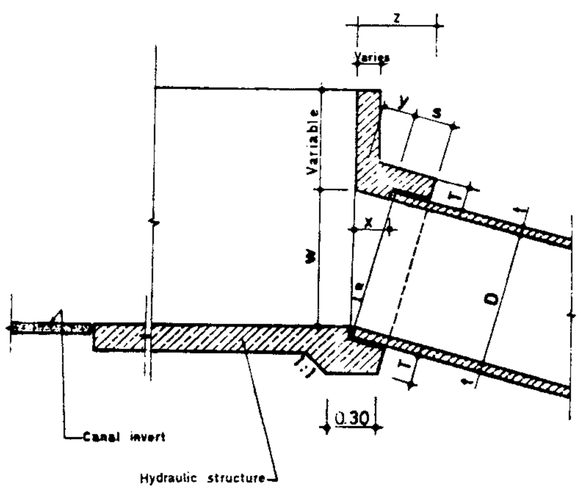

SLOPING PIPE WITHOUT GATE, AND CUT-OFF WALL

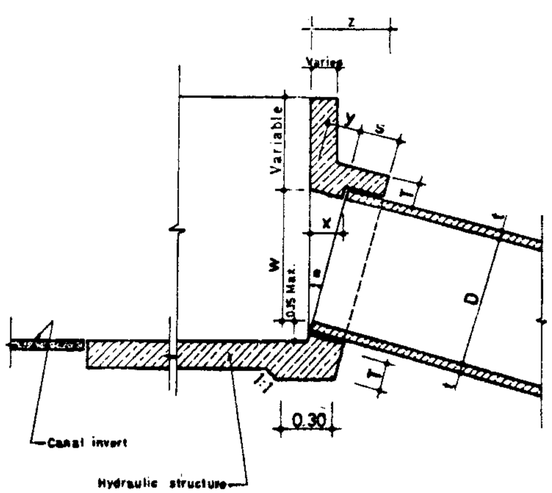

SLOPING PIPE WITH GATE, AND WITHOUT CUT-OFF WALL

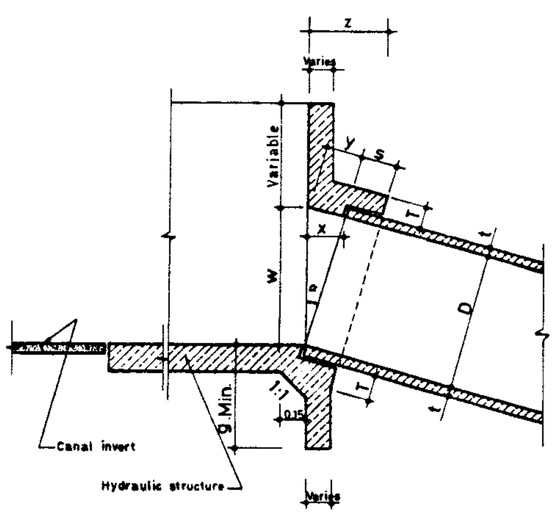

SLOPING PIPE WITHOUT GATE, AND WITH CUT-OFF WALL

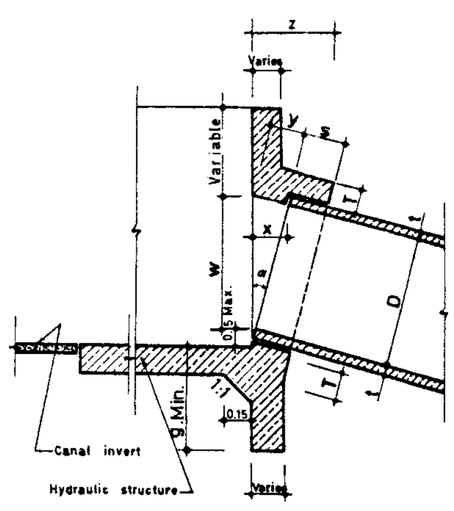

SLOPING PIPE WITH GATE, AND CUT-OFF WALL

REFERENCE DWGS: For head- dimension tables see dwgs.Nº 14/1/1/01 TO 14/1/1/03
For gene- notes see dwgs Nº. 20/2/1/01 to 20/2/1/03

Scale: N.T.S	IRRIGATION & DRAINAGE STANDARDS	
Date:	DWG.No. 17/1/1/01	TYPICAL PIPE CONNECTION TO STRUCTURES OPTION 1)
Approved:	Sheet No.1 of 3 Rev.No.	

ISLAMIC REPUBLIC OF IRAN
MINISTRY OF PLAN & E- T
TECHNICAL RESEARCH A-
STANDARD BUREAU

amoorepeyman.ir

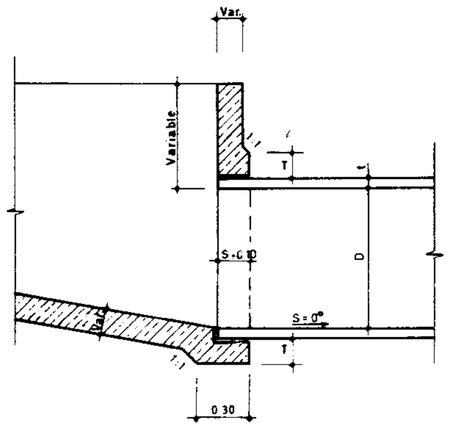

STRAIGHT PIPE WITHOUT GATE, AND CUT-OFF WALL

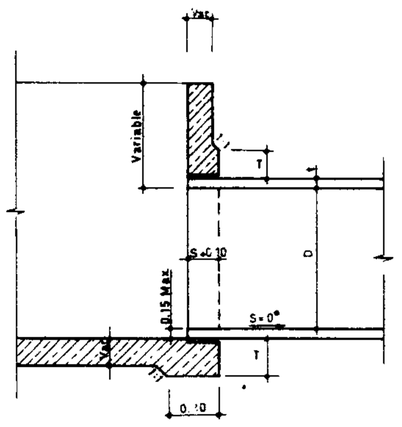

STRAIGHT PIPE WITH GATE, AND WITHOUT CUT-OFF WALL

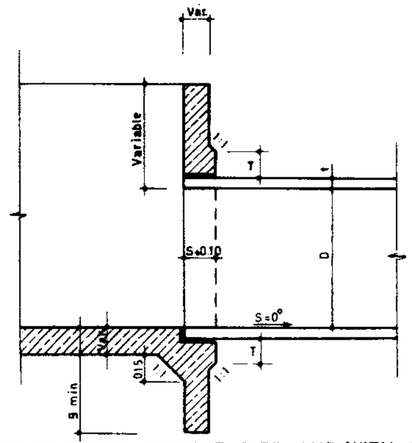

STRAIGHT PIPE WITHOUT GATE, AND WITH CUT-OFF WALL

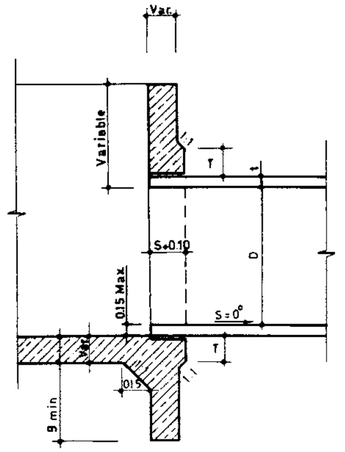

STRAIGHT PIPE WITH GATE, AND CUT-OFF WALL

DIMENSION TABLE

D	40	50	60	70	80	90	100	120	140
S	10	10	10	15	15	20	20	20	20
T	15	15	15	20	20	20	20	20	20

All dimensions are in cm.

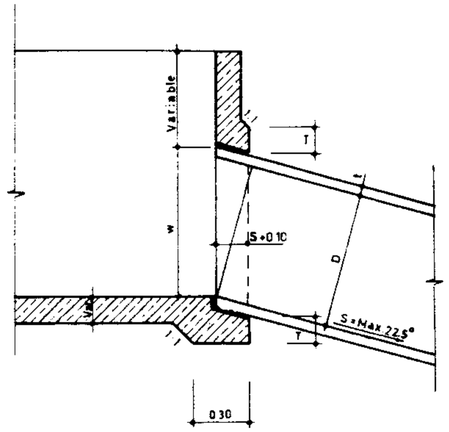

SLOPING PIPE WITHOUT GATE, AND CUT-OFF WALL

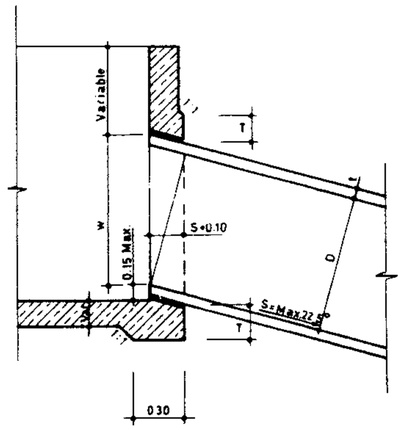

SLOPING PIPE WITH GATE, AND WITHOUT CUT-OFF WALL

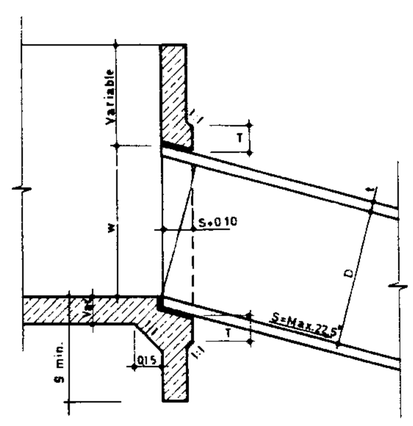

SLOPING PIPE WITHOUT GATE, AND WITH CUT-OFF WALL

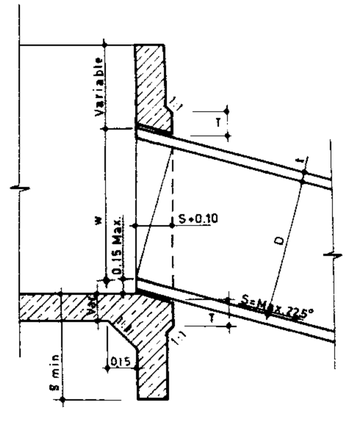

SLOPING PIPE WITH GATE, AND CUT-OFF WALL

Var = Varies or Variable

NOTE:
Extra concrete thickness around pipe connection can be eliminated by the engineer if required.

REFERENCE DWGS: For dimensi... & g see dwg. Nº 17/1/1/01
For general ...es see dwgs. Nº 20/2/1/01 to 20/2/1/03

Scale: N.T.S	IRRIGATION & DRAINAGE STANDARDS	
Date:	DWG. Nº 17/1/1/02	TYPICAL PIPE CONNECTION TO STRUCTURES (OPTION 2)
Approved:	Sheet Nº 2 of 3 / Rev. Nº	

ISLAMIC REPUBLIC OF IRAN
MINISTRY OF PLAN & BUD...
TECHNICAL RESEARCH AND STANDARD BEUREUE

omoorepeyman.ir

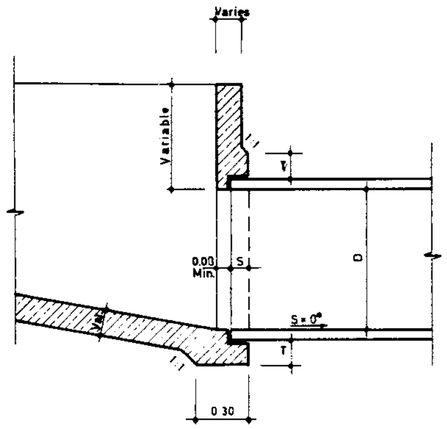

STRAIGHT PIPE WITHOUT GATE, AND CUT-OFF WALL

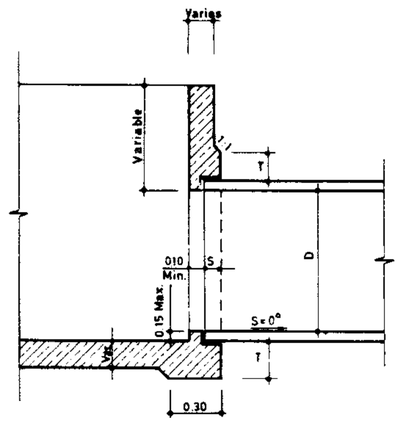

STRAIGHT PIPE WITH GATE, AND WITHOUT CUT-OFF WALL

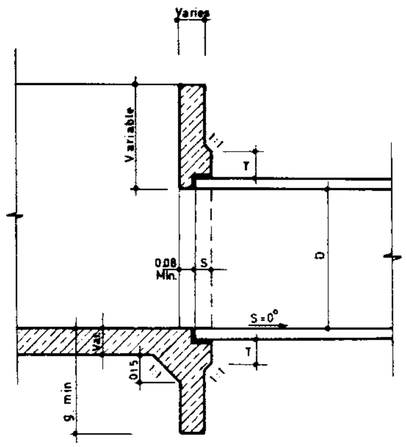

STRAIGHT PIPE WITHOUT GATE, AND WITH CUT-OFF WALL

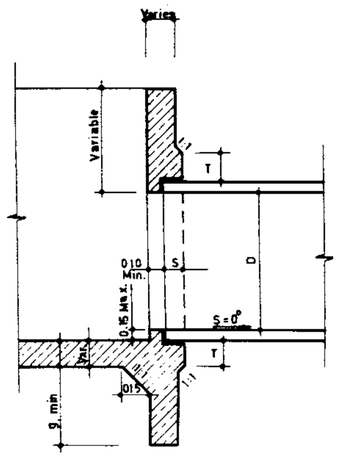

STRAIGHT PIPE WITH GATE, AND CUT-OFF WALL

DIMENSION TABLE

D	40	50	60	70	80	90	100	120	140
S	10	10	10	15	15	20	20	20	20
T	15	15	15	20	20	20	20	20	20

All dimensions are in cm.

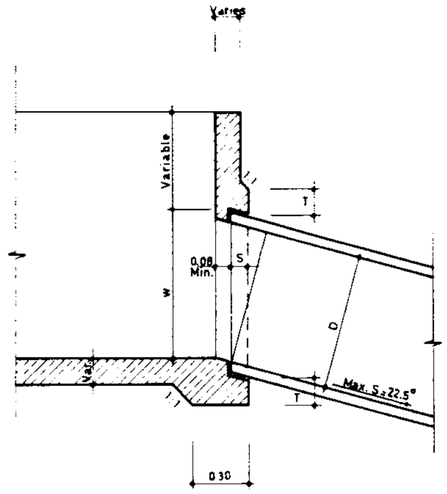

SLOPING PIPE WITHOUT GATE, AND CUT-OFF WALL

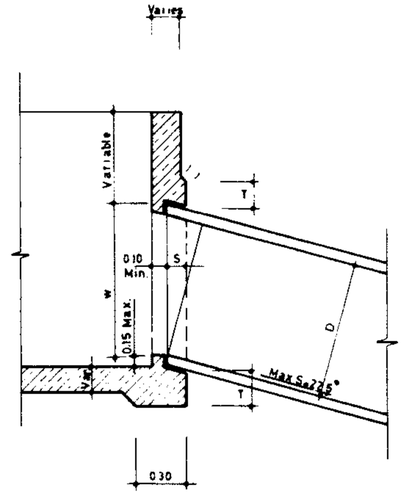

SLOPING PIPE WITH GATE, AND WITHOUT CUT-OFF WALL

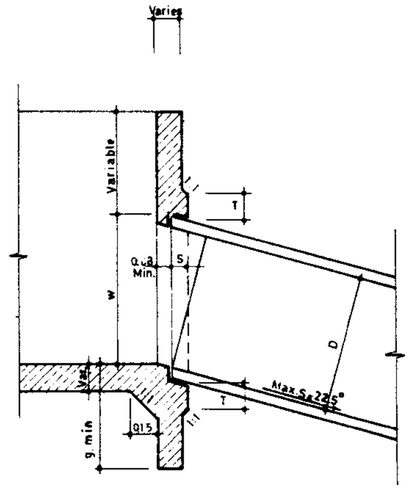

SLOPING PIPE WITHOUT GATE, AND WITH CUT-OFF WALL

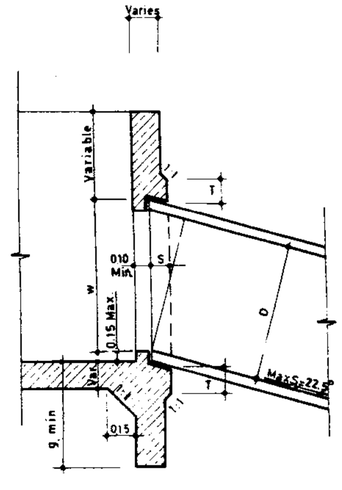

SLOPING PIPE WITH GATE, AND CUT-OFF WALL

Var. = Varies or Variable

NOTE:
Extra concrete thickness around pipe connection can be eliminated by the engineer if required.

REFERENCE DWGS: For dimension w & g see dwg. 17/1/1/01
For general notes see dwgs. Nº 20/2/1/01 TO 20/2/1/03

Scale: N.T.S	IRRIGATION & DRAINAGE STANDARDS		ISLAMIC REPUBLIC OF IRA
Date:	DWG Nº. 17/1/1/03	TYPICAL PIPE CONNECTION TO STRUCTURES (OPTION 3)	MINISTRY OF PLAN & B ET
Approved:	Sheet Nº 3 of 3 Rev.Nº.		TECHNICAL RESEARCH A: STANDARD BEUREUE

@omoorepeyman.ir

DESIGN CONSIDERATIONS

1-1 General- (a) Usage- Baffled apron drops are used in canals or wasteway channels to provide dessipation of excess energy at drops in grade. Energy dissipation occurs as the water flows over the concrete baffle blocks which are located along the floor of the chute. The ability of the baffled apron drop to accommodate a widely fluctuating tailwater elevation makes it especially suitable as an energy dissipator at the end of a canal or wasteway that discharges into a reservoir. The length of the baffled apron does not affect the efficacy of the structure. It is effective in dissipating excess energy for drops of any magnitude, but it becomes uneconomical for large flows with great drops, due to the wide section and numerous blocks required. Where an excess of trash, trees, or tumbleweeds accompainies the flow, they may become lodged in the baffle blocks, restricting the flow. Removal of this material is sometimes difficult.

(b) Inlet Control Features- Various types of inlet control features are utilized to maintain an upstream water surface as required for turnouts; or to provide velocity of approach consistent with the scouring tolerance of the upstream section· or to avoid the excessive splashing that would result from supercritical flow at the inlet. The more common types of inlet control features are as follows:

(b-1) Sill control- A sill may be provided at the inlet, as shown in figure 1-A, to reduce the velocity of approach , and minimize scour in the upstream section. The sill also provides a controlled water surface for upstream turnouts. To permit complete drainage of the upstream pool, a slot is provided through the crest, as shown in figure (2-A). The inlet should be kept free of sediment deposits, as the extensive accumulation of sediment would allow the flow to sweep over the sill at a velocity too fast for effective dissipation of energy.

(b-2) Control notch- A control notch may be provided at the inlet, as shown in figure 1-B, to control the upstream water depth. While the control notch is designed to maintain normal depth and velocity in the upstream section, it produces a fast velocity in the inlet itself, causing splashing as the fast velocity flow strikes the first row of baffle blocks. Excessive splashing may require frequent maintenance of the erosion protection. The control notch should be kept free of trash.

(b-3) Inlet without control- The simplest type of inlet (shown in fig. 1C) is used where there is not a requirement to control the upstream water surface for turnout deliveries, and where the upstream channel is sufficiently stable to withstand (without erosion) the higher velocities associated with water surface drawdown. To minimize splashing as the flow strikes the first row of baffle blocks, an invert curve may be provided to allow the flow to strike the blocks in a direction normal to their upstream face. Where flows are infrequent, and some splashing is permissible, the curve is sometimes omitted, as shown in figure 1B.

(C) Miscellaneous Features.-

(C-1) Bridge deck,- Where a crossing is required, a bridge deck may be incorporated in the inlet design.

(C-2) Cutoff walls and wingwalls.- In addition to the inlet cutoff walls, wingwalls are provided at, or near the downstream end of the structure, to decrease percolation and to retain the backfill along the slope. Where the downstream channel is subject to degradation, a cutoff wall is extended down from the invert, as shown in figure (2-B). The wingwalls may be located at the end of the structure to coincide with the cutoff, but they are often located a few meter upstream from the end. This provides a better stilling action at the outlet, and raises the top elevation of the wingwall, which should be located above the tailwater elevation to minimize erosion

(C-3) Protective drains.- Protective drains are sometimes provided under the invert of the baffled apron drop to relieve the uplift pressure following the termination of flow.

1-2 Design Considerations.- (a) Capacity.- The capacity of the baffled apron drop is a function of the allowable discharge, q, per m. of width, as shown in table 1. They have been operated for short periods at about twice the design capacity without excessive erosion.

(b) Inlet.- The inlet should be the same width as the baffled apron, and should provide a velocity of approach slower than the critical velocity, V_c. Where splashing must be minimized , the entrance velocity should not exceed about $\frac{V_c}{2}$, where

$$V_c = \sqrt[3]{qq}$$

in the rectangular inlet section. Other design considerations are as follows:

(b-1) Sill control.- The inlet length should be at least $2d_1$, as shown in figure 1A. The required height of the sill above the inlet floor may be determined from the energy balance between the inlet and the upstream channel.

Thus,

$$E_{s1} = E_{sc} + h_i + h_s$$

or

$$h_s = E_{s1} - E_{sc} - h_i$$

where

h_s is the sill height,

$E_{s1} = d_1 + h_{v1}$ in the upstream channel,

$E_{sc} = d_c + h_{vc}$ in the control section at the sill,

and

$$h_i = 0.5\Delta h_v = 0.5(h_{vc} - h_{v1}) = 0.5\left[\frac{V_c^2}{2g} - \frac{V_1^2}{2g}\right]$$

The curvature of the sill crest should terminate at its point of tangency with the slope of the downstream apron. This point should not be more than 0.30 m in elevation below the crest. This is assured by limiting the radius of curvature to a maximum of 2.7 m. A 1.80 m radius is frequently used. The sill has a 15 cm-wide slot to provide drainage of the upstream pool.

(b-2) Control notch.- A control notch, where used should conform to the design requirements of dwg No. 12/5/2/01. The rectangular inlet section should begin 1.5 m upstream from the control notch, and the length between the notch and the sill should be equal to three times the upstream water depth, as shown in figure 1B, to permit the flow to spread to the full width of the section.

(c) Baffled Apron Dimensions (see fig.2).- The following steps are suggested as a guide to be used in setting the dimensions :

(c-1) Set the longitudinal slope of the chute floor and sidewalls at 2 to 1 (tan ø = 0.5).

(c-2) Approximate width of structure should be set by the relation $B = \frac{Q}{q}$

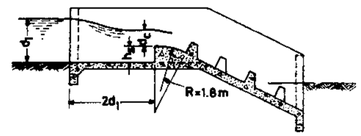

SILL CONTROL
Fig. I-A Not to scale.

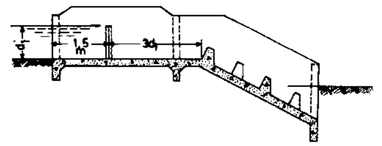

NOTCH CONTROL
Fig. I-B Not to scale.

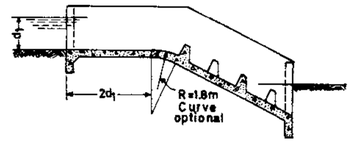

NO UPSTREAM CONTROL
Fig. I-C Not to scale.

FIG 1: Typical inlet types

Table 1.-Recommended discharge

Q capacity, m^3/s	q *Discharge per m of m^3/s
0 to 1.10	0.470 to 0.940
1.11 to 2.80	0.940 to 1.42
2.81 to 5.35	1.42 to 1.89
5.36 to 13.00	1.89 to 2.83

* Discharge per m. of width, q should be interpolated within the range indicated.

++++++++++++++++++++

Where

B = width,
Q = maximum total discharge, and
q = allowable discharge per m of width (see table 1).

REFERENCE DWGS : For design example see dwgs Nº 16/2/2/02 & 16/2/2/03

Scale:	IRRIGATION & DRAINAGE STANDARDS		
Date:	DWG.Nº 16/2/2/01		BAFFLED APRON DROPS
Approved:	Sheet.Nº 1 of 4	Rev. Nº	(DESIGN CONSIDERATIONS PAGE 1)

ISLAMIC REPUBLIC OF IRAN
MINISTRY OF PLAN & BUDGET
TECHNICAL RESEARCH AND STANDARDS BUREAU

@omoorepeyman.ir

For the permissible entrance velocity, see design Consideration part "b".

(c_3) Set the first row of baffles so that the base of the upstream face is at the downstream end of the invert curve and no more than 0.30 m in elevation below the crest.

(c_4) Baffle block height, h_b should be about 0.9 times critical depth, d_c, to nearest cm.

(c_5) Baffle block widths and spaces should be equal, and not less than h_b, but not more than 1-1/2 h_b. Partial blocks, having a width not less than 1/3 h_b and not more than 2/3 h_b should be placed against the sidewalls in rows 1,3,5,7, etc. Alternate rows of baffle blocks should be staggered so that each block is downstream from a space in the adjacent row. The structure width, B, determined above, should be adjusted so convenient baffle block widths can be used.

(c_6) The slope distance, s, between rows of baffle blocks, as shown in fig. 2 , should be at least 2 h_b, but no greater than 1.8m.

A spacing of 1.80m may be used for all blocks equal to or less than 0.90 m in height.

(c_7) A minimum of four rows of baffle blocks should be used. The baffled apron should be extended so that the top of at least one row of baffle blocks will be below the bottom grade of the outlet channel as discussed in subsection (1_2)-(c_3). The apron should be extended beyond the last row of blocks a distance equal to the clear space between block rows.

(c_8) Baffle blocks are constructed with their upstream faces normal to the chute floor. The longitudinal thickness, T, of the baffle blocks at the top should be at least 0.20 m, but not more than 0.25 m. See block detail, figure 2_C.

(c_9) Suggested height of the walls to provide adequate freeboard is three times the baffle block height measured normal to the chute floor. It is generally not feasible to set the freeboard for these structures to contain all of the spray and splash.

(d) Uplift Stability.- The net force causing flotation of the structure should be considered, assuming a sudden cessation of flow in the channel. The net flotation force is equal to the weight of the empty structure minus the hydrostatic force remaining in the soil around the structure. The magnitude of the maximum hydrostatic force, or uplift pressure varies with the theoretical height of the percolation gradient as determined by Lane's weighted-creep method, assuming an upstream gradient at the normal water surface elevation.

(e) Sliding Stability.-

(e_1) Long baffled apron drops.- The slope stability or tendency of long baffled aprons to slide down the 2 to 1 slope should be checked. This is particularly important in channels where erosion may remove the earth material at the downstream toe of the apron.

(e_2) Short baffled apron drops.- Short baffled apron drops also should be checked for sliding. Complete removal by erosion of the earth material downstream from the downstream cutoff walls should be assumed, unless the stability of the downstream channel is assured. A horizontal sliding plane should be assumed rather than the sloping plane assumed for long baffled apron drops.

If the forces tending to induce sliding are greater than the forces resisting sliding (using suitable safety factors), additional cutoff walls should be included.

(f) Miscellaneous Considerations.-

(f_1) Gravel or riprap should be provided on each side of the structure from the top of the slope to the downstream wingwall, extending laterally a distance equal to the wall height. This protection above the maximum downstream water surface is to prevent erosion from splashing. Below this water surface the protection is required to prevent erosion by eddy current. Wingwalls hold the slope protection in place.

(f_2) The channel grade may be controlled by a downstream structure, by geologic formation, or by being on a stable slope for the design capacity. A slope of 0.0018 will usually be stable for storm waterflows, but for normal canal flows the assumed slope should be no steeper than that of a canal in the same material.

The bottom row of blocks should be set below the computed channel invert elevation. When scour has occured, to provide for future storms, the apron and walls should be extended by exposing the reinforcement in the end of the structure and bonding a new extension to the original installation

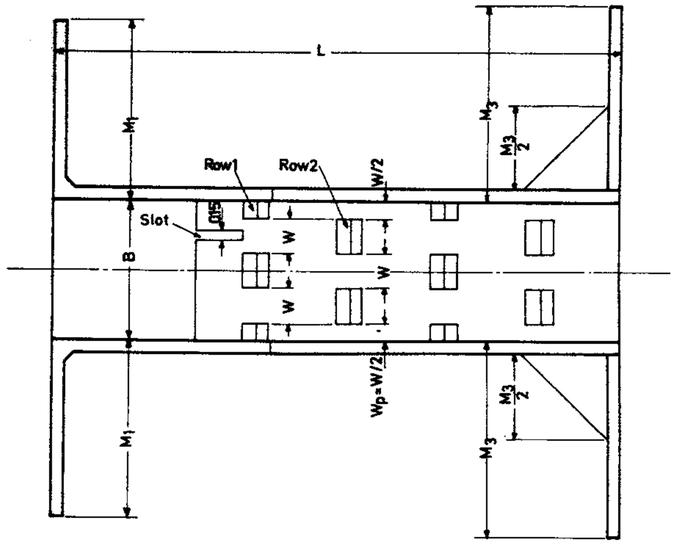

PLAN
Fig. 2_A Scale 1:75

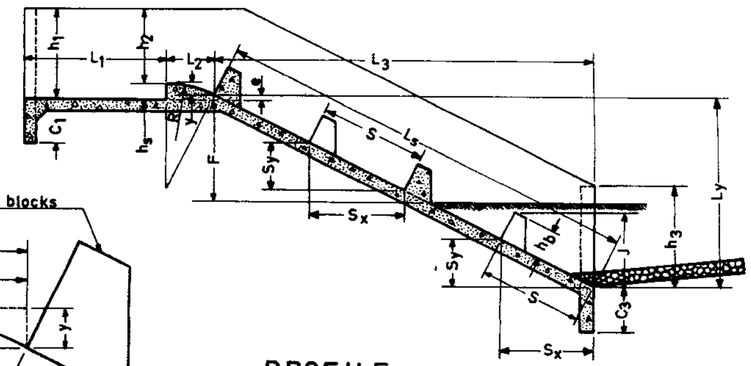

PROFILE
Fig. 2_B Scale 1:75

Fig 3. Sill curve dimensions
Scale 1:20

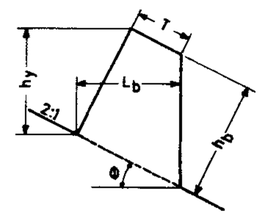

BLOCK DETAIL
Fig. 2_C Scale 1:20

REFERENCE DWGS: For design example see dwgs Nº 16/2/2/02 & 16/2/2/03

Scale: 1:75, 1:20	IRRIGATION & DRAINAGE STANDARDS		ISLAMIC REPUBLIC OF IRAN
Date:	DWG.Nº 16/2/2/02	BAFFLED APRON DROPS	MINISTRY OF PLAN & BUDGET
Approved:	Sheet Nº 2 of 4	Rev. Nº	DESIGN CONSIDERATION (Page2)
			TECHNICAL RESEARCH AND STANDARDS BUREAU

DESIGN EXAMPLE

A wasteway channel descends a slope that requires energy dessipation to prevent excessive erosion. As a dependable tailwater cannot be assured, it is decided that a baffled apron drop would best meet the need.

a) Assumptions.-

(a-1) On the basis of soil type and operating conditions it is decided that little splashing should be permitted, and a sill-type control is preferable (see fig. 1A).

(a-2) Hydraulic properties of the wasteway channel are as follows:

$Q = 3.240\ m^3/s$

$b = 2.40\ m$ | $n = 0.025$

$d_1 = 1.225\ m$ | $s = 0.00035$

$A_1 = 5.192\ m^2$ | ss = 1-1/2:1

$f_b \simeq 0.60\ m$

$v_1 = 0.624\ m/s$

$h_v = 0.02\ m$ | $h_B = 1.225+0.60=1.825 \simeq 1.85m$

(a-3) A drop of 1.80 m in invert elevation is required.

b) Solution (see fig. 2 for dimension nomenclature).-

(b-1) From table 1, find the recommended discharge per m., q, for a total capacity of 3.24 m^3/s, and determine a preliminary chute width.

For

$$Q = 3.24\ m^3/s$$

find by interpolation

$$q = 1.50\ m^3/s \text{ (approximately)}.$$

Then

$$B = \frac{Q}{q} = \frac{3.24}{1.50} = 2.16\ m.$$

(b-2) Determine the limits of baffle block dimensions, based upon critical depth, d_c.

Ref to publication #104

Let $K'_c = \frac{Q}{B^{5/2}} = \frac{3.24}{(2.2)^{5/2}} = .4513$

Read $\frac{y_c}{b}$ Coresponding to the calculated K'_c

Under colum 0

From table B-2,3 of the same publication $\frac{y_c}{b} = .275$

Y_c refers to dc and b refers to B

Then: $dc = 0.275 \times 2.2 = 0.605 \simeq 0.61\ m$

Block height, $h_b = 0.9 \times d_c - 0.549 \simeq 0.55m$

Block width and space, w:

Min. $w = h_b = 0.55\ m$, Max. $w = 1.5\ h_b = 1.5 \times 0.55 = 0.825$

(b-3) Determine exace dimensions of baffle blocks and chute width. As the partial block width

$w_p = \frac{1}{3} h_b$ min= 0.183 min.,

and $\frac{2}{3} h_b$ max.=0.366 max.,

Try $w_p = \frac{1}{2} h_b$. for simplicity.= $0.275 \simeq 0.28m$

Then, use alternate rows as follows:

Rows 1 and 3:

1 full block =1w

2 full spaces=2w

2 half blocks=1w

B=4w

Rows 2 and 4:

2 full blockes =2w

1 full space =1w

2 half spaces =1w

B =4w

Thus, the total width, B, of any row is

B =4w

Using the minimum block width of 0.55m.

B= 4x0.55= 2.20 m

To simplify dimensions, use

w =0.60m $> 0.55 <0.825$.

and

w_p=0.30m $> 0.183 < 0.366$.

Then,

B = 4w = 4x0.60 = 2.40m.

$q = \frac{3.24}{2.40} = 1.35\ m^3/s$.

by use the same method using publication #104

$d_c = 0.571$ m.

$h_b = 0.9 \times 0.571 = 0.514$ m.

Use

$h_b = 0.52m$

Select T= 0.22m(see block detail, fig.(2-c)

inorder $0.20m < T < 0.25m$

(b-4) Determine inlet length, L_1:

$L_1 = 2d_1 = 2 \times 1.225 = 2.45$ m.

(b-5) Determine inlet sill height h_s,

using B=2.40m., g = 1.35 m^3/s,

$d_c = 0.571$,

$h_{v_c} = 0.285$, and $V_c = 2.364$ m/s

Then

$h_s = E_{s1} - E_{s_c} - h_i$ (where h_i=inlet loss)

$$h_s = (d_1 + h_{v_1}) - (d_c + h_{v_c}) - 0.5(h_{v_c} - h_{v_1})$$

$$= (1.225+0.02) - (0.571+0.285) - 0.50(0.285-0.02)$$

$$= 0.255\ m.$$

(b-6) Check inlet velocity to minimize splashing:

Determine depth, d_1, at inlet cutoff:

$$d_1 = h_s + d_c + h_{v_c}$$

$$= h_s + d_c + \frac{d_c}{2}$$

$$= 0.255 + 0.571 + 0.285$$

$$= 1.111$$

The entrance velocity is then,

$$V_1 = \frac{Q}{A_1} = \frac{Q}{d_1 B} = \frac{3.24}{1.111 \times 2.40} = 1.215\ m/s$$

Determine critical velocity, V_c over crest:

$$V_c = \frac{Q}{A} = \frac{3.24}{d_c B} = \frac{3.24}{0.572 \times 2.4} = 2.364\ m/s$$

Thus, the inlet velocity is approximately equal to half the critical velocity, and splashing will be minimized.

(b-7) Determine sill length, L_2, and dimension e, as shown in fig. 3.

Using a radius, R = 1.80m, and an invert slope of 2 to 1,

$\phi = 26^o34'$

$\sin \phi = 0.4472 = y/z$

$\tan \phi = 0.5 = y/x$

$\phi/2 = 13^o17'$

$\tan\phi/2 = 0.2361 = z/R$

Substituting,

$z = 0.2361R = 0.425$ m.

$y = 0.4472z = 0.190$ m.

$x = \frac{y}{0.5} = 0.380$ m.

Then,

$L_2 = x + z = 0.380 + 0.425 = 0.805$ m.

and

$e = h_s - y = 0.225 - 0.190 = 0.065$ m.

(b-8) Determine the slope distance, S, between rows of baffle blocks, as shown in fig.(2-B)

$S = 2\ h_b$ min.

$= 2(0.52) = 1.04$ m.

Use

S = 1.80 m (see subsec. (1-2)-(c-6)

(b-9) Determine minimum depth of cover, j, at outlet to insure that the last row of baffle blocks will be covered bv the backfill, placed in the structure to the elevation of the downstream grade.

$S_y = S \sin \phi = 1.80(0.4472) = 0.805$ m.

$h_y = h_b \cos \phi = 0.52(0.8944) = 0.465$ m.

$j = S_y + h_y = 1.270$ m.

(b-10) Determine apron lengths, L_3 and L_s for a drop, F = 1.80 m.

Minimum distance,

$L_y = e + F + j$

$= 0.065 + 1.80 + 1.270 = 3.135$ m.

Minimum rows of blocks:

$$\text{Rows} = \frac{L_y}{S_y} = \frac{3.135}{0.805} = 3.89$$

Use 4 rows.

Where the ratio, $\frac{L_y}{S_y}$ indicates that fewer rows would be adequate the minimum number of four rows should be used by extending two or more rows below the donwstream grade.

Finally,

$L_s = 4\ S$

$= 4(1.80) = 7.20$ m.

$L_y = 4\ S_y$

$= 4(0.805) = 3.22$ m.

$L_3 = 4\ S_x$

$= 4(1.80 \cos\phi) = 6.440$ m.

(b-11) Determine overall length of structure.

$L = L_1 + L_2 + L_3$

$= 2.45 + 0.805 + 6.440$

$= 9.70$ m.

(b-12) Determine the following wall heights (see fig(2-b)

$h_1 = d_1 + 0.30m = 1.225 + 0.30 = 1.525m$

With a level invert, and with the top of the walls level from h_1 to h_2,

$h_2 = h_1 - h_s$

$= 1.525 - 0.255$

$= 1.270$ m.

REFERENCE DWGS: For design considerations see dwgs. Nº 16/2/2/01 & 16/2/2/02

Scale:	IRRIGATION & DRAINAGE STANDARDS		
Date:	DWG Nº 16/2/2/03	BAFFLED APRON DROPS DESIGN EXAMPLE(Page1)	ISLAMIC REPUBLIC OF IRAN MINISTRY OF PLAN & BUD. TECHNICAL RESEARCH AND STANDARDS BUREAU
Approved:	Sheet Nº 3 of 4 Rev. Nº		

omoorepeyman.ir

The height of the chute walls,

$$h_3 = 3\,h_b = 3(0.52) = 1.56 \text{ m.}$$

(b_13) Determine length, M_1, of the upstream wingwalls, as shown in fig. 4.

$$M_1 = 1.5\,h_1 + C_1,$$

Where the cutoff depth, $C_1 = 0.75$ for a water depth,

$$d_1 = 1.225 \text{ m. (see dwg No.13/6/1/01}$$

Then,

$$M_1 = 1.5(1.525) + 0.75$$
$$= 3.04 \text{ m.}$$

(b_14) Determine length, M_3, of downstream wingwalls, as shown in fig. 5.

$$M_3 = 1.5\,h_3' + C_3,$$

Where the cutoff depth, $C_3 = 0.75$ m. for an assumed channel water depth of 1.22 m.

$$h_3' = \frac{h_3}{\cos \phi} \quad (\text{with } \phi = 26^{\circ}34')$$

$$= \frac{1.56}{0.8944}$$

$$= 1.74 \text{ m.}$$

Then

$$M_3 = 1.5(1.74) + 0.75$$

$$= 3.36$$

(b_15) Check flotation of the structure (due to uplift forces) according to the requirements of subsection 1-2 (d).

(b_16) Check sliding stability of the structure according to the requirements of subsection 1-2 (c).

(b_17) Determine protection requirements. Select type of protection from dwg. No. 13/4/1/01 for inclined drops with a water depth of 1.225 m.

Inlet Protection: Type 1, extending a distance d_1 upstream, and up the sloping sides to an elevation 0.30 m. above the normal water surface.

Slope Protection: Type 1, as described in subsection 1-2(f).

Outlet Protection: Type 3, extending downstream a distance $4d_1$, and up the sloping sides to an elevation 0.3 m. above the assumed water surface, or to top of constructed bank, whichever is greater. Note that the backfill, placed over the last row of blocks, covers the riprap to the elevation of the natural grade (see fig. 2_b)

(b_18) Check percolation, by the requirement and provide cutoff walls if needed.

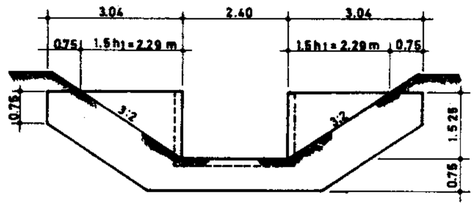

Fig 4. Upstream wingwalls
Scale 1:100

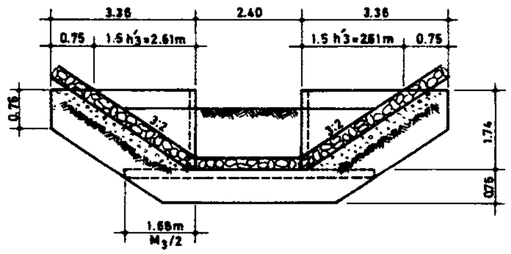

Fig 5. Downstream wingwalls
Scale 1:100

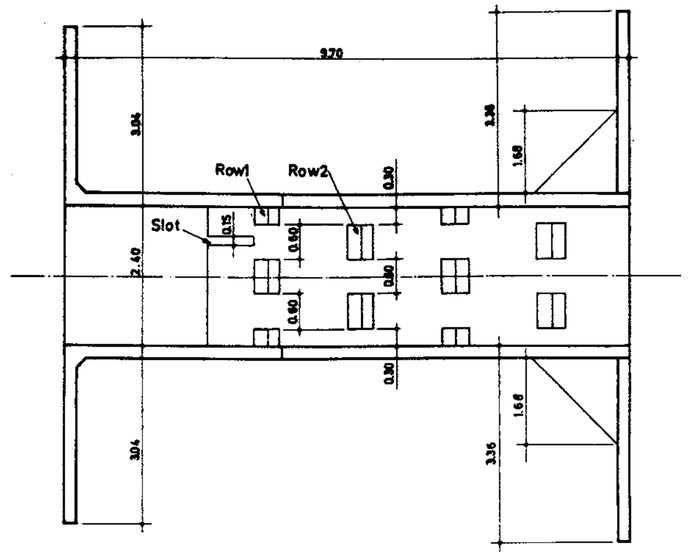

PLAN
Fig. 3_a Scale 1:75

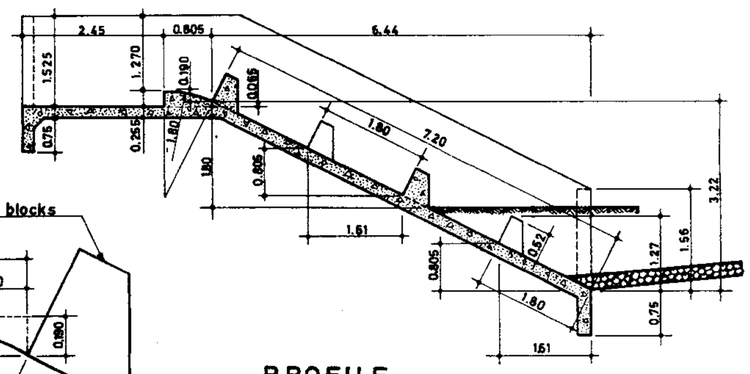

PROFILE
Fig. 3_B Scale 1:75

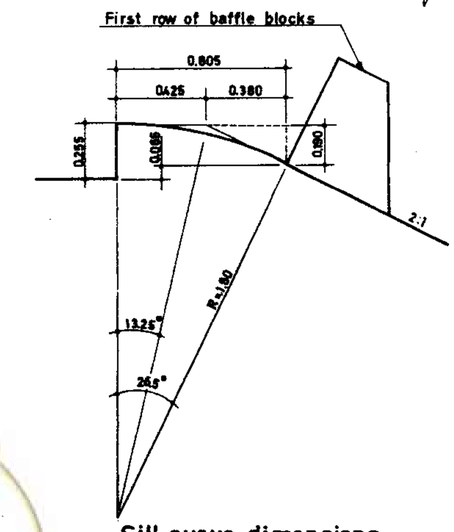

Fig 3. Sill curve dimensions
Scale 1:20

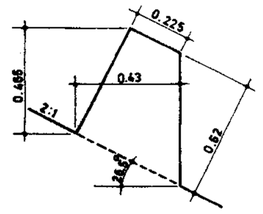

Baffled apron dimensions
Fig. 3_C Scale 1:20

REFERENCE DWGS: For design considerations see dwgs Nº 16/2/2/01 & 16/2/2/02

Scale: 1:100, 1:20, 1:75	IRRIGATION & DRAINAGE STANDARDS		ISLAMIC REPUBLIC OF IRAN
Date	DWG.Nº 16/2/2/04	BAFFLED APRON DROPS	MINISTRY OF PLAN & BUD[illegible]
Approved:	Sheet Nº 4 of 4	Rev. Nº	DESIGN EXAMPLE (Page2)	TECHNICAL RESEARCH AN[illegible] STANDARDS BUREAU

omoorepeyman.ir

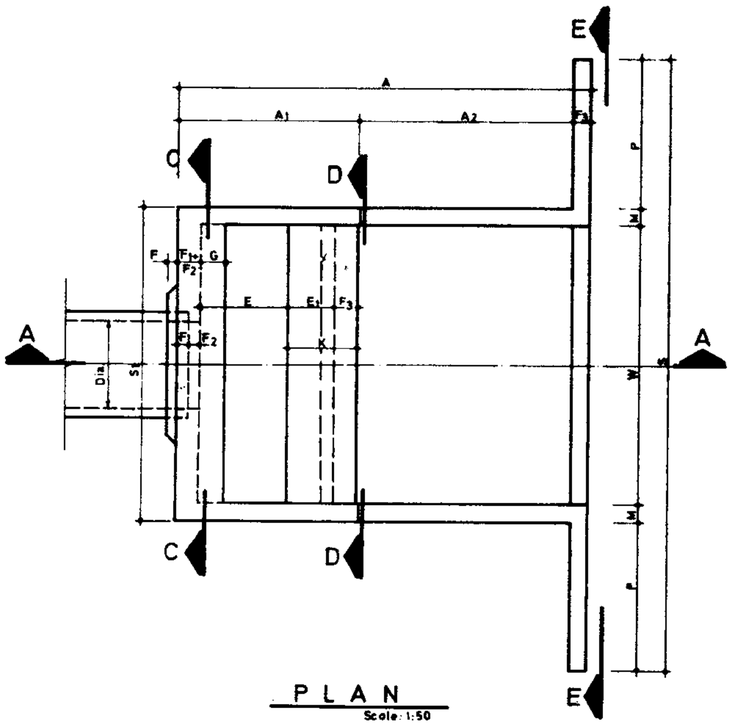

PLAN
Scale: 1:50

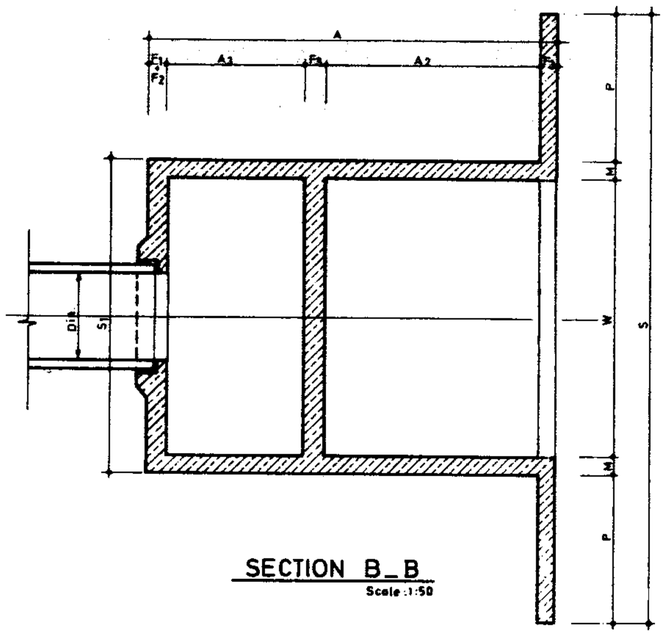

SECTION B_B
Scale :1:50

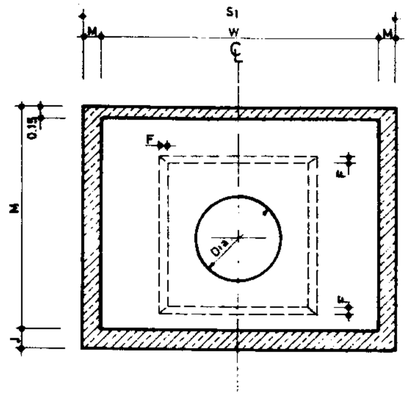

SECTION C_C
Scale: 1:50

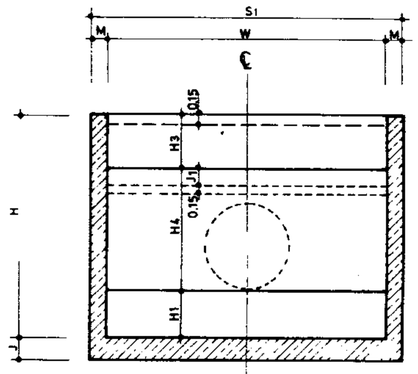

SECTION D_D
Scale:1:50

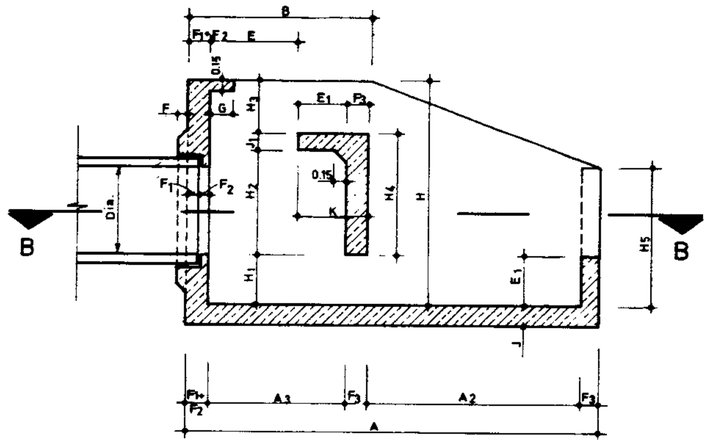

SECTION A_A
Scale: 1:50

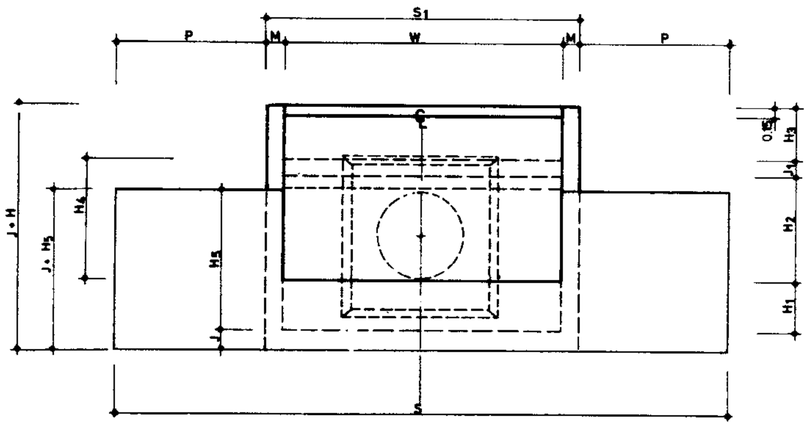

SECTION E_E
Scale:1:50

NOTES:

1. Baffled oulet are used at the end of the pipe drops, pipe chutes, and pipe crass drainage culverts or anywhere that the excess energy of the incoming water jet must be dissipated.
2. A tail water depth is not required for satisfactory hydraulic performance as is the case for a hydraulic jump basin.
3. For the best operation, the tailwater should be about ($H_{4/2}+E_1$) above the invert of the baffled outlet. The height of tailwate above the baffed outlet invert should never exceed (H_4+E_1).
4. If the tailwater depth is uncontrolled, the baffled outlet invert is usually a distance (E_1) below the downstream channal invert.
5. Because the baffled outlet does not require tailwater, this outlet is therefore particulary useful where tailwater depth is uncontrolled or where the rate of discharge increase is sudden and the tailwater buildup is slow
6. If the entrance pipe slopes downward, the outlet end of the pipe should be turned horizontal for a length of at least 3 pipe diameters.
7. Because there is no practical method of making the basin self_cleaning of debris, where debris is a problem, other types of energy dissipators should be used.
8. Protection with a well_graded mixture of rocks most having diameters equal to one_twentieth of the basin width should be placed to a depth equal to the height of the end sill for distance equal to one basin width downstream from the end sill.

REFERENCE DWGS; For dimensions tables see dwg Nº 16/1/2/01
For reinforcement see dwg Nº 16/1/3/01 TO 16/1/3/06
For general notes see dwg Nº 20/2/1/01 TO 20/2/1/03

Scale: 1:50	IRRIGATION & DRAINAGE STANDARDS		ISLAMIC REPUBLIC OF IRAN
Date:	DWG Nº 16/1/1/01	BAFFLED OUTLET	MINISTRY OF PLAN & BUD.
Approved:	Sheet Nº 1 of 12	Rev. Nº	PLAN & SECTIONS
			TECHNICAL RESEARCH AND STANDARD BUREAU

omoorepeyman.ir

STANDARD DIMENSION TABLE, STRUCTURE SELECTING PROCEDURE, REINFORCEMENT DWGS, REFERENCE TABLE AND DESIGN EXAMPLE.

STANDARD DIMENSION TABLE

Struc.	W	A	A_1	A_2	A_3	B	E	E_1	F	F_1	F_2	F_3	G	H	H_1	H_2	H_3	H_4	H_5	J	J_1	K	M	P	S	S_1	R/Bar. Kg.	Conc. m^3	FROM m^2
100	1.00	1.70	0.85	0.70	0.50	0.85	0.35	0.15	0.10	0.10	0.10	0.15	0.25	0.90	0.15	0.40	0.20	0.55	0.50	0.18	0.15	0.30	0.15	0.70	2.70	1.30	133.43	1.18	12.69
120	1.20	1.95	0.95	0.85	0.60	0.95	0.40	0.20	0.10	0.10	0.10	0.15	0.25	1.05	0.20	0.45	0.25	0.60	0.60	0.18	0.15	0.35	0.15	0.85	3.20	1.50	165.35	1.60	16.23
140	1.40	2.25	1.05	1.05	0.70	1.20	0.45	0.25	0.10	0.10	0.10	0.15	0.25	1.20	0.25	0.55	0.25	0.70	0.70	0.18	0.15	0.40	0.15	1.00	3.70	1.70	210.78	2.11	21.64
160	1.60	2.50	1.15	1.20	0.80	1.20	0.55	0.25	0.10	0.10	0.10	0.15	0.25	1.35	0.25	0.60	0.35	0.75	0.80	0.18	0.15	0.40	0.15	1.00	3.90	1.90	246.51	2.59	26.21
180	1.80	2.75	1.25	1.35	0.90	1.40	0.60	0.30	0.10	0.10	0.10	0.15	0.25	1.50	0.30	0.70	0.35	0.85	0.90	0.18	0.15	0.45	0.15	1.25	4.60	2.10	296.67	3.22	33.42
200	2.00	3.05	1.35	1.55	1.00	1.50	0.65	0.35	0.10	0.10	0.10	0.15	0.25	1.65	0.35	0.75	0.40	0.90	1.00	0.18	0.15	0.50	0.15	1.25	4.80	2.30	358.98	3.86	39.51
220	2.20	3.30	1.45	1.70	1.10	1.60	0.75	0.35	0.10	0.10	0.10	0.15	0.25	1.80	0.35	0.85	0.45	1.00	1.10	0.18	0.15	0.50	0.15	1.40	5.30	2.50	422.74	4.58	45.68
240	2.40	3.60	1.60	1.80	1.20	1.60	0.80	0.40	0.10	0.10	0.10	0.20	0.25	1.95	0.40	0.90	0.45	1.10	1.20	0.18	0.20	0.60	0.18	1.40	5.56	2.76	542.12	5.94	53.53
260	2.60	3.90	1.70	2.00	1.30	1.85	0.85	0.45	0.10	0.10	0.10	0.20	0.25	2.10	0.45	1.00	0.45	1.20	1.30	0.22	0.20	0.65	0.20	1.50	6.00	3.00	998.55	7.79	64.06
280	2.80	4.15	1.80	2.15	1.40	1.85	0.95	0.45	0.10	0.10	0.10	0.20	0.25	2.25	0.45	1.05	0.55	1.25	1.40	0.22	0.20	0.65	0.20	1.50	6.20	3.20	1113.09	8.76	70.70
300	3.00	4.40	1.95	2.20	1.50	2.00	1.00	0.50	0.10	0.10	0.10	0.25	0.25	2.40	0.50	1.15	0.55	1.35	1.50	0.22	0.20	0.75	0.20	1.70	6.80	3.40	1323.36	10.40	81.85
320	3.20	4.75	2.10	2.40	1.60	2.15	1.05	0.55	0.10	0.13	0.12	0.25	0.30	2.55	0.55	1.20	0.60	1.40	1.60	0.25	0.20	0.80	0.25	1.70	7.10	3.70	1541.07	13.62	91.96
340	3.40	5.00	2.20	2.55	1.70	2.30	1.15	0.55	0.10	0.13	0.12	0.25	0.30	2.70	0.55	1.30	0.65	1.50	1.70	0.25	0.20	0.80	0.25	1.90	7.70	3.90	1557.78	15.41	106.08
360	3.60	5.35	2.35	2.75	1.80	2.50	1.20	0.60	0.10	0.18	0.12	0.25	0.30	2.85	0.60	1.35	0.70	1.55	1.80	0.30	0.20	0.85	0.30	2.00	8.20	4.20	1995.41	20.11	117.50
380	3.80	5.60	2.45	2.90	1.90	2.60	1.25	0.65	0.10	0.18	0.12	0.25	0.30	3.00	0.65	1.45	0.70	1.65	1.90	0.30	0.20	0.90	0.30	2.00	8.40	4.40	2159.56	22.10	128.18
400	4.00	5.90	2.55	3.10	2.00	2.60	1.35	0.65	0.10	0.18	0.12	0.25	0.30	3.15	0.65	1.50	0.80	1.70	2.00	0.30	0.20	0.90	0.30	2.00	8.60	4.60	2354.85	24.17	138.42

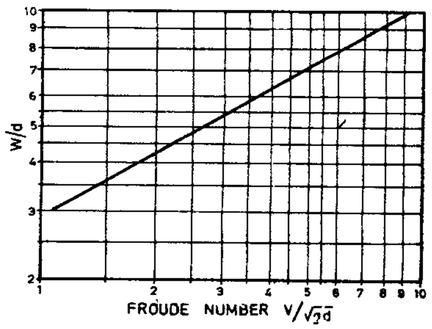

PROCEDURE FOR SELECTING THE STRUCTURE

1 _ Define discharge (Q in m^3/s) & head (h in meter).

2 _ Compute theoretical velocity $V=\sqrt{2gh}$ in m/s if $V > 15$ m/s Baffled out let is not Recommended

3 _ Select pipe Dia. $D=0.6\sqrt{Q}$ assume max.velcocity. 3.5 m/s when pipe flowing full :

4 _ Determine basin dimensions:

4_1 calculate depth of flow entering the basin $d=\sqrt{\frac{Q}{V}}$

4_2 calculate Froude number $F=\frac{V}{\sqrt{gd}}$

4_3 read ratio $\frac{W}{d}$ against the calculated F from the graph:

4_4 $W=d\times(\frac{W}{d})$

5 _ Select the structure which it's W is close enough to calculated W :

SELECTING REINFORCEMENT DWG.

GROUP Nº	STR. Nº	DWG.Nº
1	100 to 220	16/1/3/01
2	240	16/1/3/02
3	260 to 280	16/1/3/03
4	300	16/1/3/04
5	320 to 340	16/1/3/05
6	360 to 400	16/1/3/06

EXAMPLE:

1 $Q=1.2$ m/s. & $h=8.3$ m.

2 _ $V=\sqrt{2\times9.81\times8.3}=12.76$ m/s.

3 _ $D=0.6\sqrt{1.2}=.657$ m.

Selected : D = 700 m.m.

4_1 $d=\sqrt{\frac{1.2}{12.76}}=0.307$ m.

4_2 $F=\frac{12.76}{\sqrt{9.81\times0.307}}=7.35$

4_3 From the graph $\frac{W}{d}=8.9$

4_4 $W=0.307\times809=2.732$ m.

5 _ Structure Nº. 280 which it's W = 2.80 m. is selected.

6 _ Use dwg. Nº. 16/1/3/03 for reinforcement.

REFERENCE DWGS: For plan & sections see dwg. Nº 16/1/1/01

For reinforcement see dwgs. Nº 16/1/3/01 TO 16/1/3/06

Scale:	IRRIGATION & DRAINAGE STANDARDS	
Date:	DWG.Nº. 16/1/2/01	BAFFLED OUTLET DIMENSION TABLE
Approved:	Sheet Nº 2 of 12 Rev.Nº	

ISLAMIC REPUBLIC OF IRAN
MINISTRY OF PLAN & BUD...
TECHNICAL RESEARCH AND STANDARD BUREAU

omoorepeyman.ir

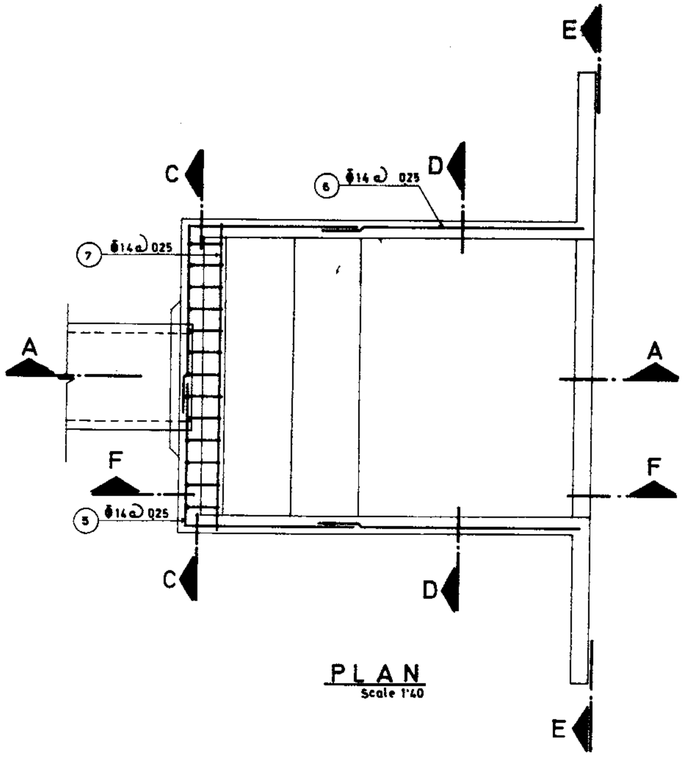

PLAN
Scale 1:40

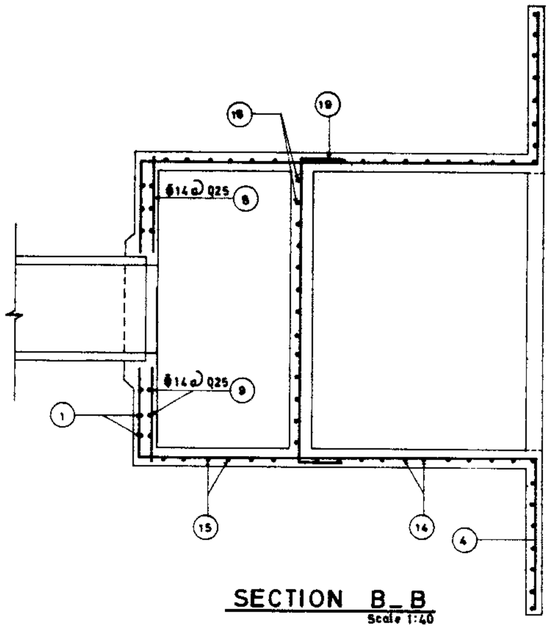

SECTION B_B
Scale 1:40

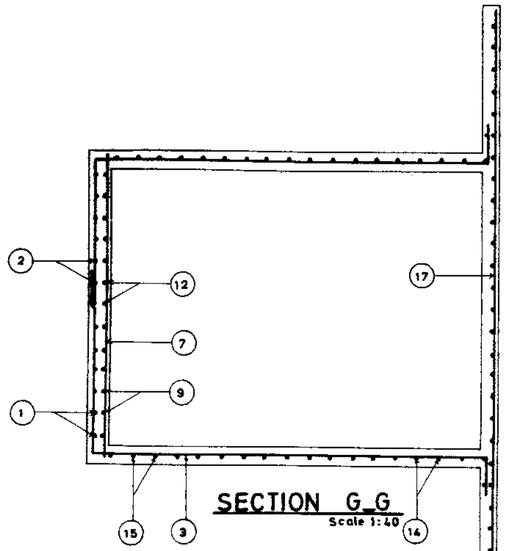

SECTION G_G
Scale 1:40

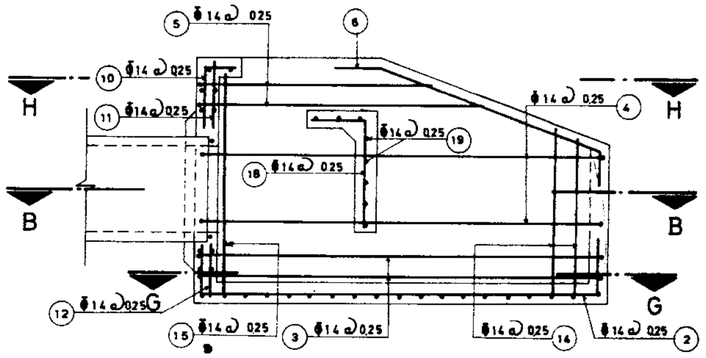

SECTION A_A
Scale 1:40

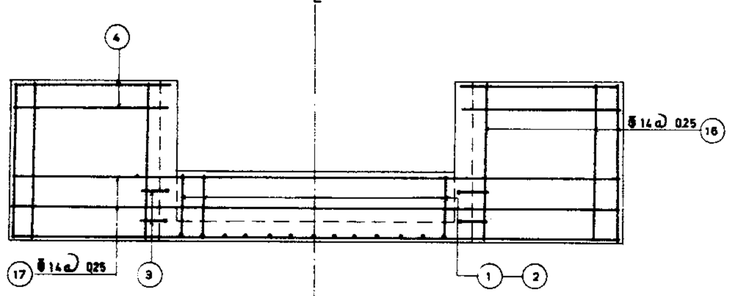

SECTION E_E
Scale 1:40

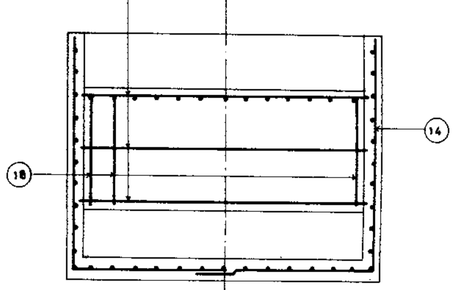

SECTION D_D
Scale 1:40

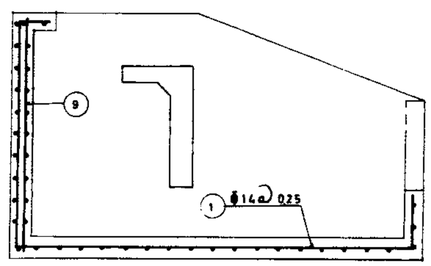

SECTION F_F
Scale 1:40

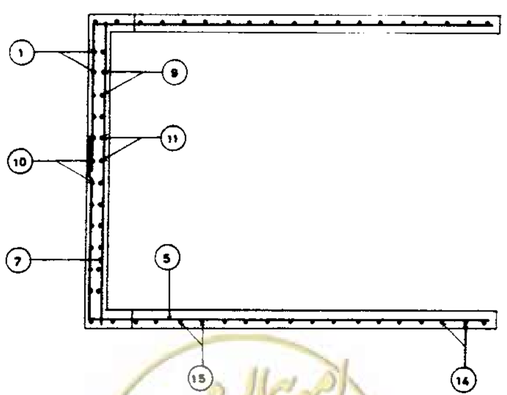

SECTION H_H
Scale 1:40

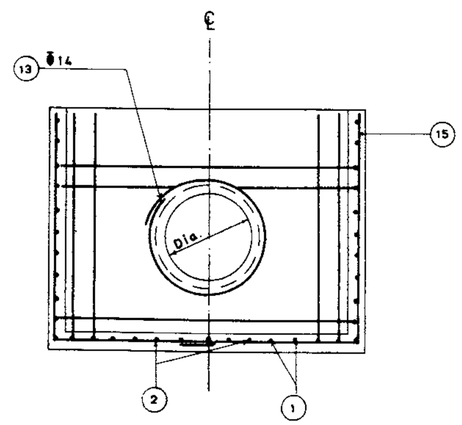

SECTION C_C
scale 1:40

REFERENCE DWGS: For dimensions see dwg 16/1/2/01
For list of reinforcement see dwgs. 16/1/3/07 & 16/1/3/08
For plan & sections see dwg. № 16/1/1/01

Scale: 1:40	IRRIGATION & DRAINAGE STANDARDS		
Date:	DWG №. 16/1/3/01		BAFFLED OUTLET REINFORCEMENT PLAN & SECTIONS GROUP 1
Approved:	Sheet №. 3 of 12	Rev. №.	

ISLAMIC REPUBLIC OF IRAN
MINISTRY OF PLAN & BUDGET
TECHNICAL RESEARCH AND STANDARD BUREAU

omoorepeyman.ir

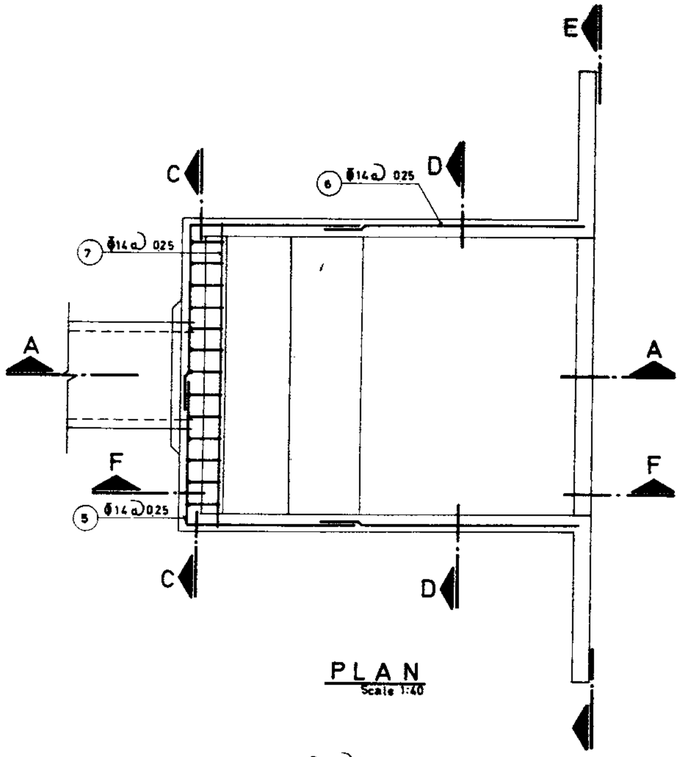

PLAN
Scale 1:40

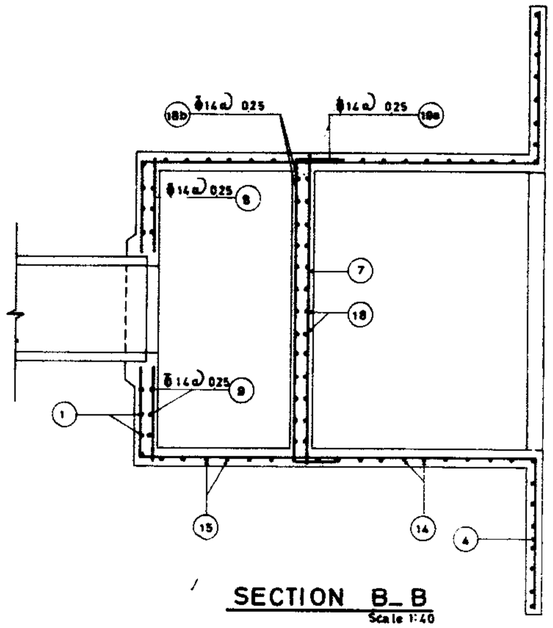

SECTION B_B
Scale 1:40

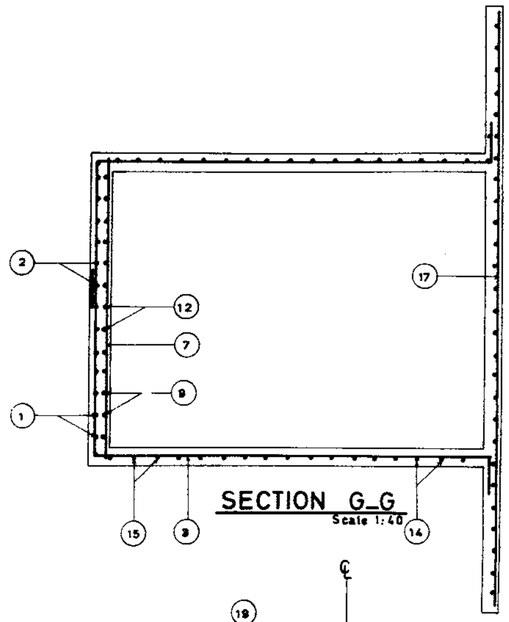

SECTION G_G
Scale 1:40

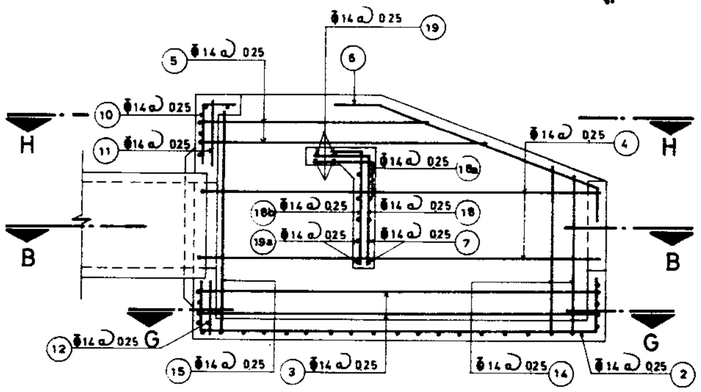

SECTION A_A
Scale 1:40

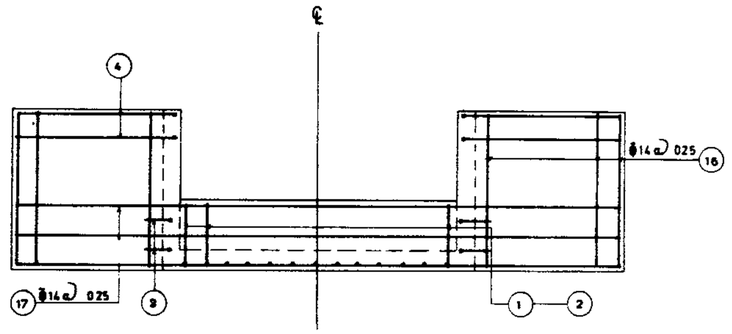

SECTION E_E
Scale 1:40

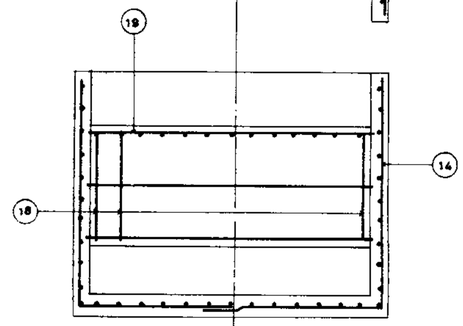

SECTION D_D
Scale 1:40

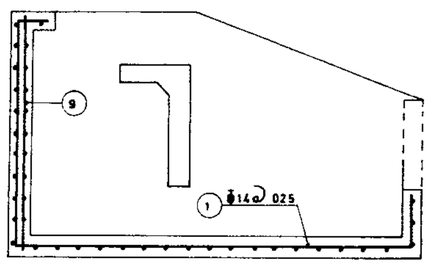

SECTION F_F
Scale 1:40

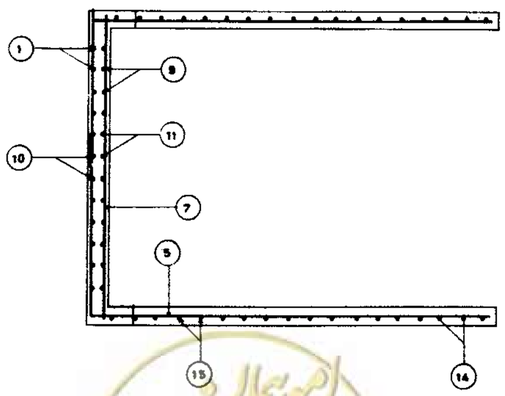

SECTION H_H
Scale 1:40

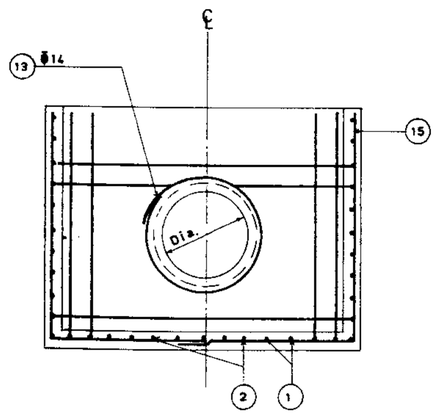

SECTION C_C
Scale 1:40

REFERENCE DWGS: For dimension tables see dwg. 16/1/2/01
For list of reinforcement see dwg. 16/1/3/08
For plan & sections see dwg Nº 16/1/1/01

Scale: 1:40	IRRIGATION & DRAINAGE STANDARDS	
Date:	DWG Nº. 16/1/3/02	BAFFLED OUTLET REINFORCEMENT PLAN & SECTIONS GROUP 2
Approved:	Sheet Nº. 4 of 12 Rev Nº.	

ISLAMIC REPUBLIC OF IRAN
MINISTRY OF PLAN & BUDGET
TECHNICAL RESEARCH AND STANDARD BUREAU

omoorepeyman.ir

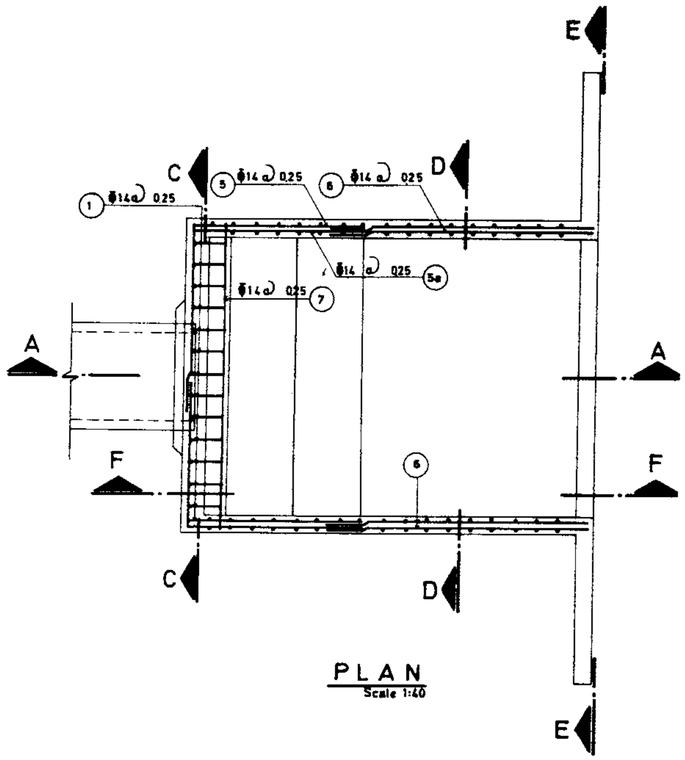

PLAN
Scale 1:40

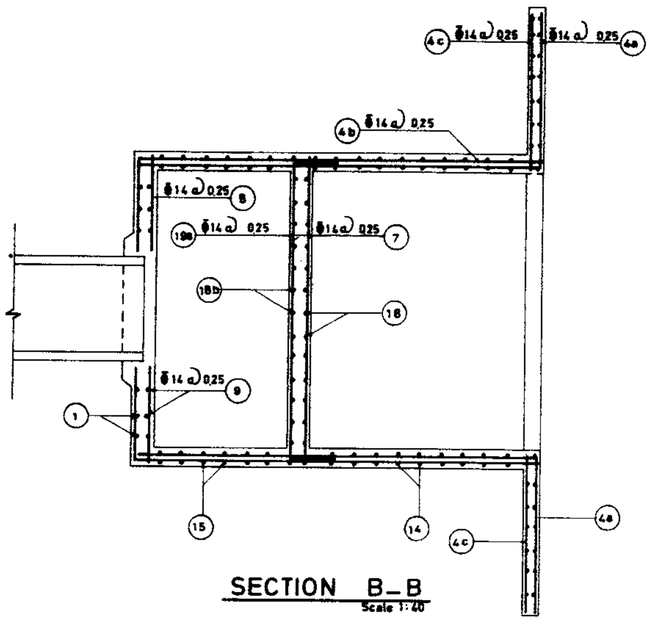

SECTION B–B
Scale 1:40

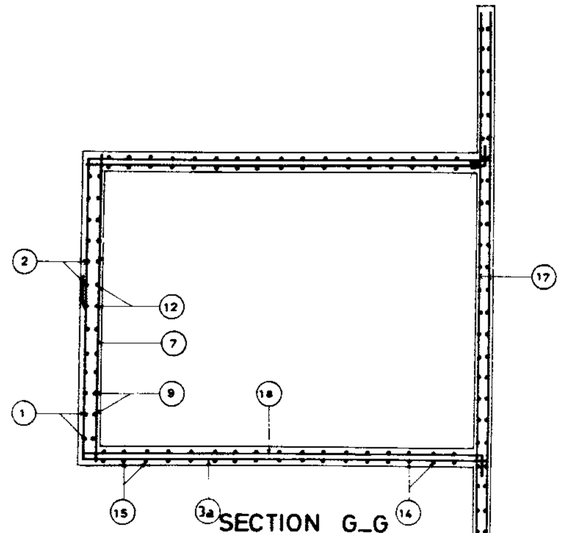

SECTION G–G
Scale 1:40

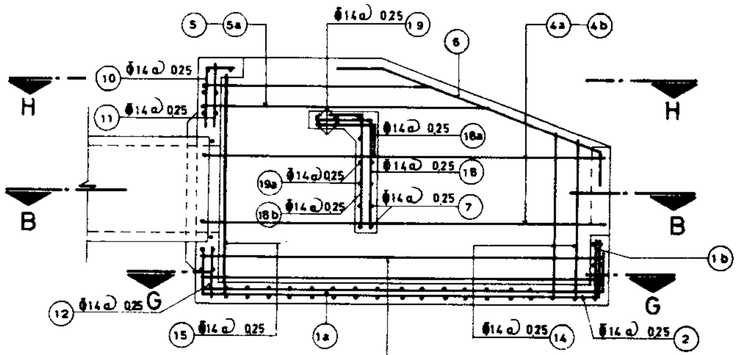

SECTION A–A
Scale 1:40

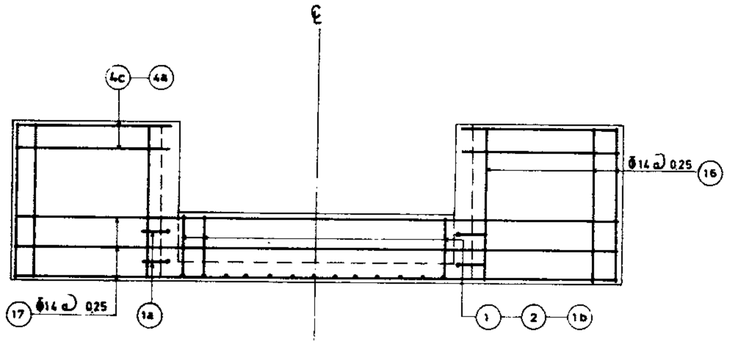

SECTION E–E
Scale 1:40

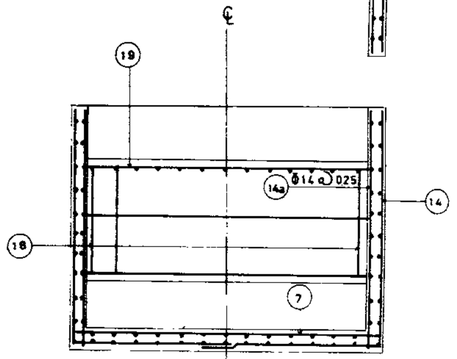

SECTION D–D
Scale 1:40

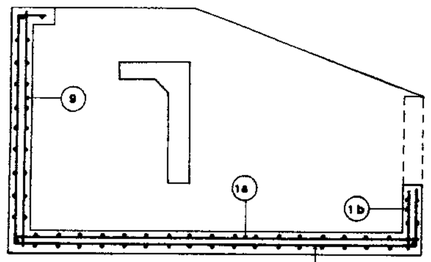

SECTION F–F
Scale 1:40

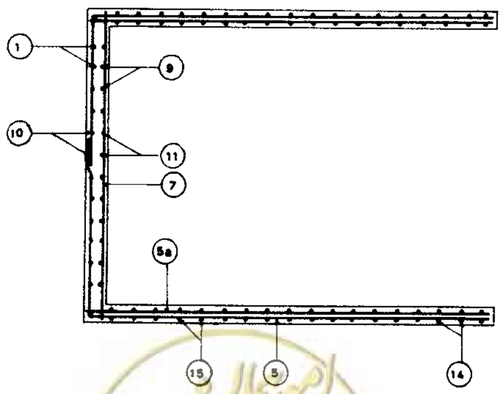

SECTION H–H
Scale 1:40

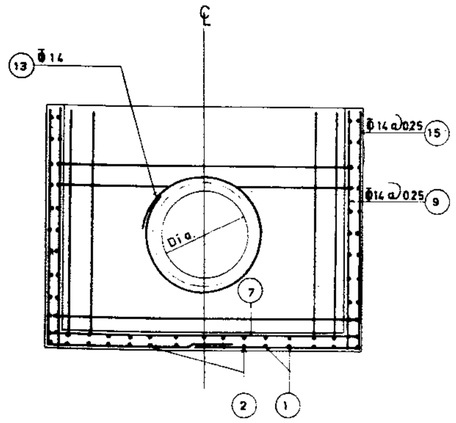

SECTION C–C
Scale 1:40

REFERENCE DWGS: For dimensions tables see dwg 16/1/2/01
For list of reinforcement see dwg 16/1/3/09
For plan & sections see dwg Nº 16/1/1/01

Scale: 1:40	IRRIGATION & DRAINAGE STANDARDS		ISLAMIC REPUBLIC OF IRAN
Date:	DWG Nº. 16/1/3/03	BAFFLED OUTLET REINFORCEMENT PLAN & SECTIONS GROUP 3	MINISTRY OF PLAN & BUDGET
Approved:	Sheet Nº. 5 of 12 Rev. Nº.		TECHNICAL RESEARCH AND STANDARD BUREAU

omoorepeyman.ir

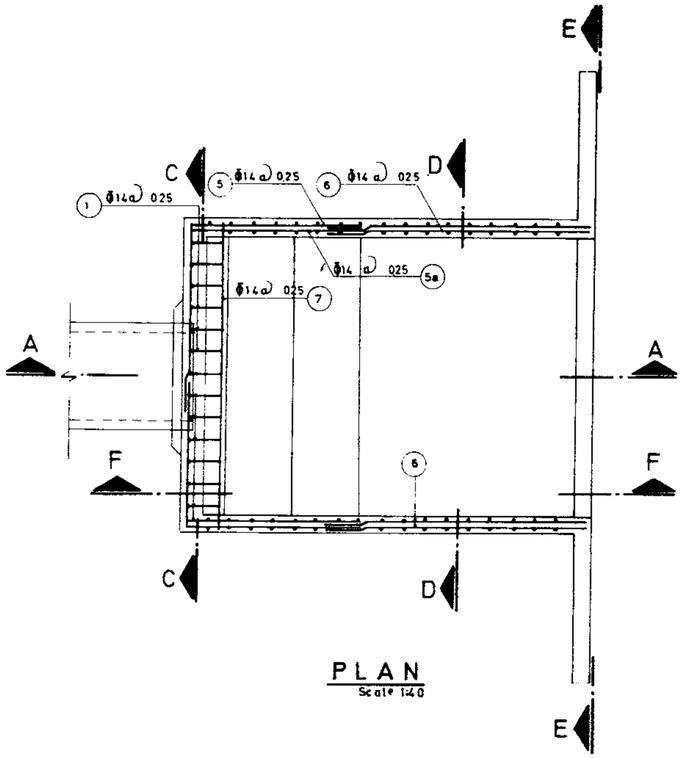

PLAN
Scale 1:40

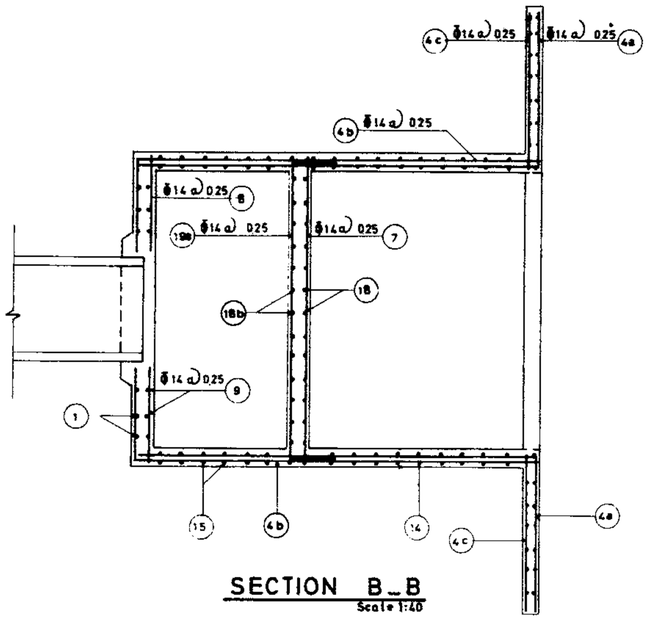

SECTION B_B
Scale 1:40

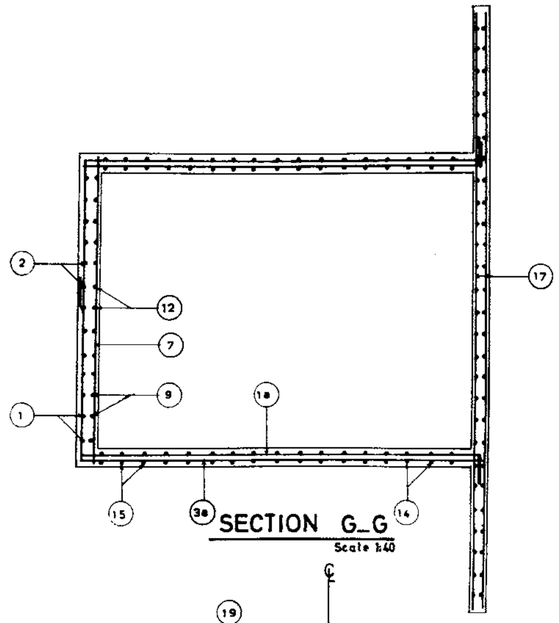

SECTION G_G
Scale 1:40

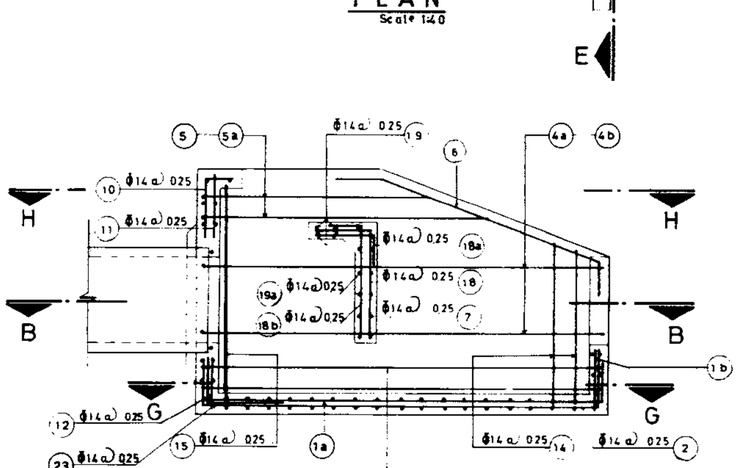

SECTION A_A
Scale 1:40

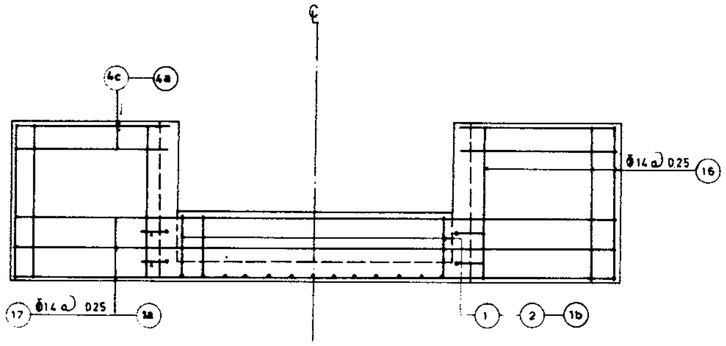

SECTION E_E
Scale 1:40

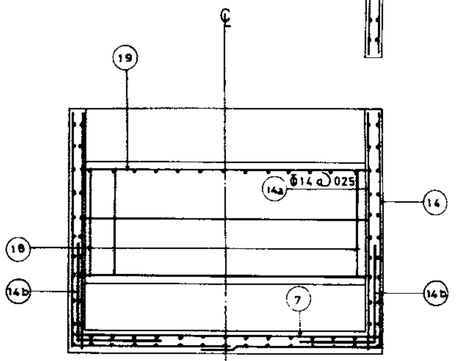

SECTION D_D
Scale 1:40

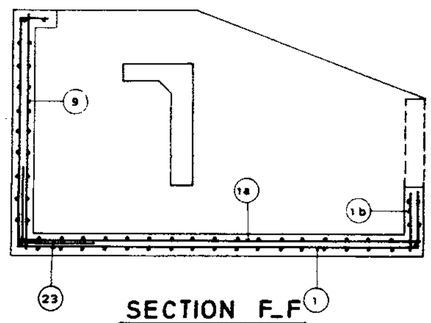

SECTION F_F
Scale 1:40

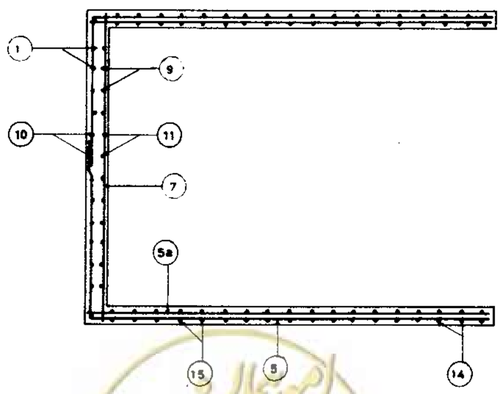

SECTION H_H
Scale 1:40

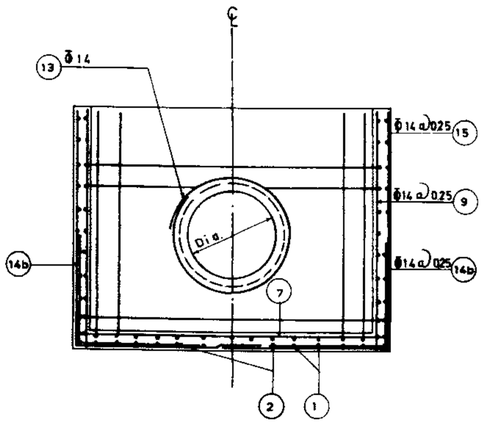

SECTION C_C
Scale 1:40

REFERENCE DWGS: For dimens... tables see dwg. 16/1/2/01
For list of ...nforcement see dwg. 16/1/3/09
For plan & s... ons see dwg. 16/1/1/01

Scale: 1:40	IRRIGATION & DRAINAGE STANDARDS		
Date:	DWG.No. 16/1/3/04		BAFFLED OUTLET REINFORCEMENT PLAN & SECTIONS GROUP 4
Approved:	Sheet No. 6 of 12	Rev. No.	

ISLAMIC REPUBLIC OF IRAN
MINISTRY OF PLAN & B... ET
TECHNICAL RESEARCH AN...
STANDARD BUREAU

omoorepeyman.ir

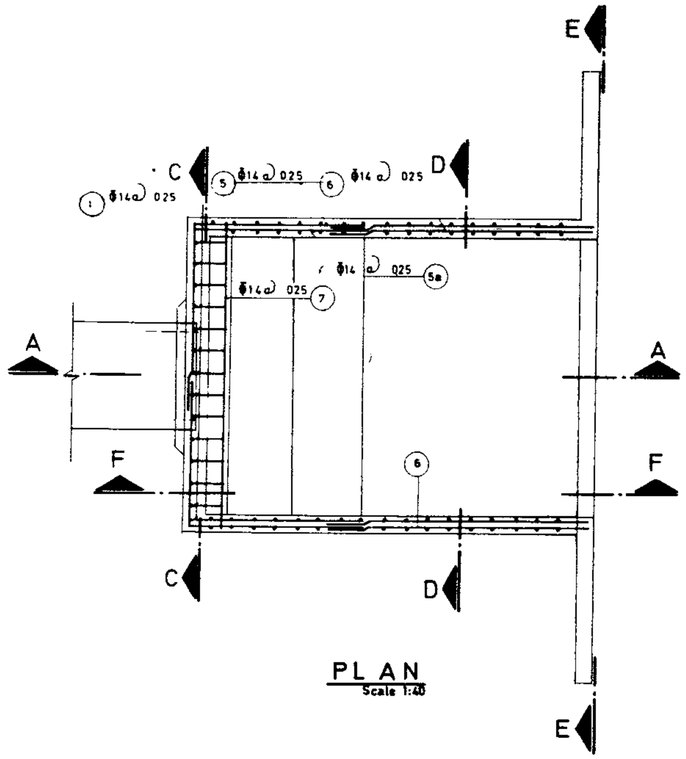

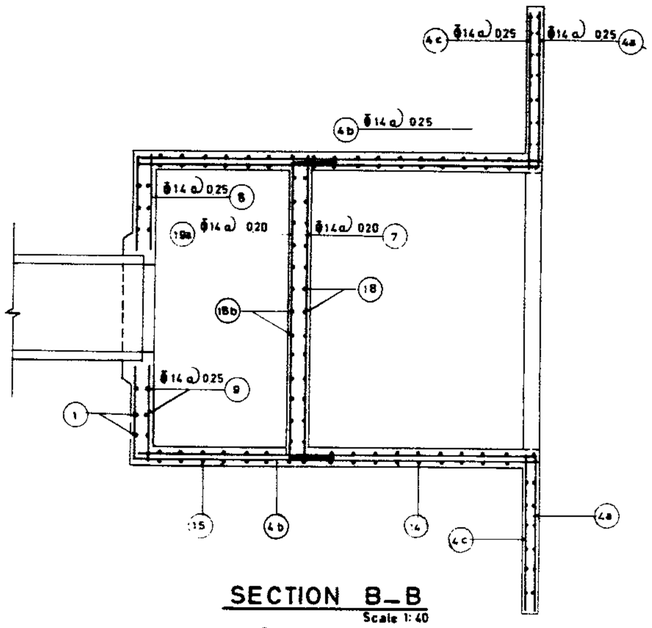

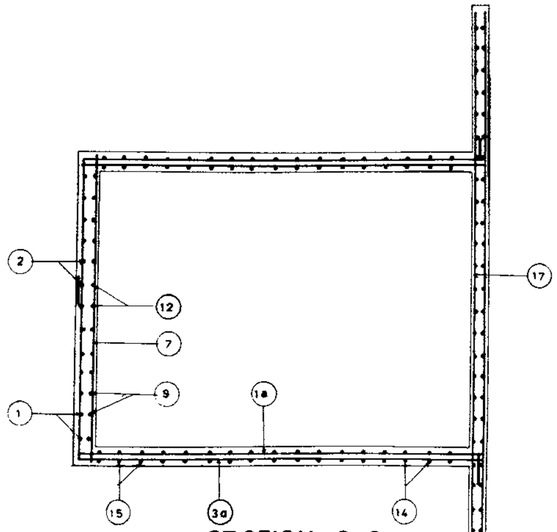

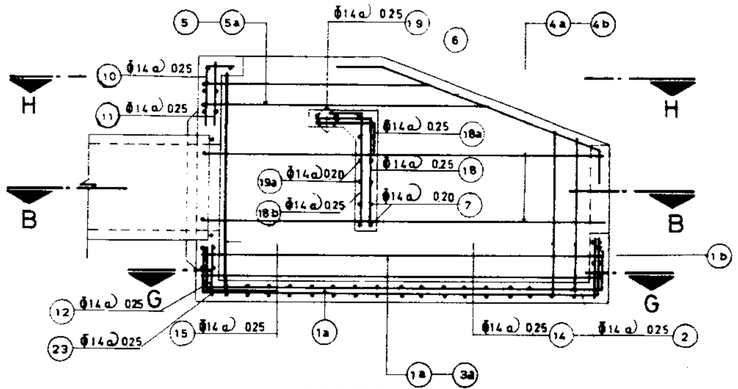

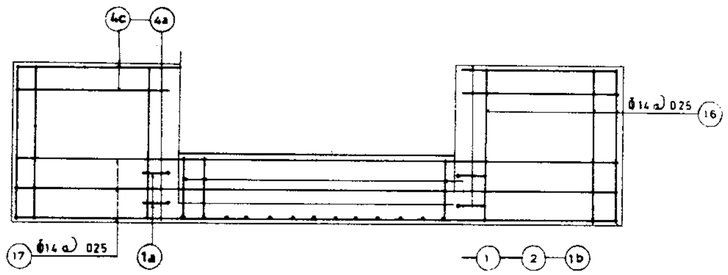

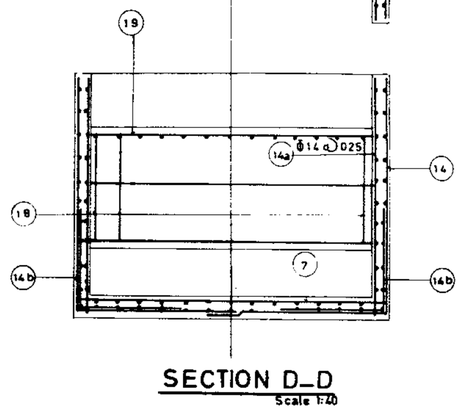

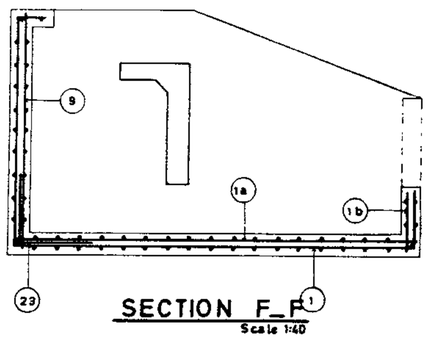

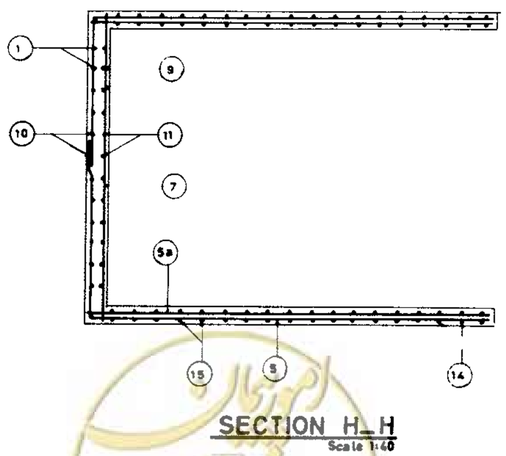

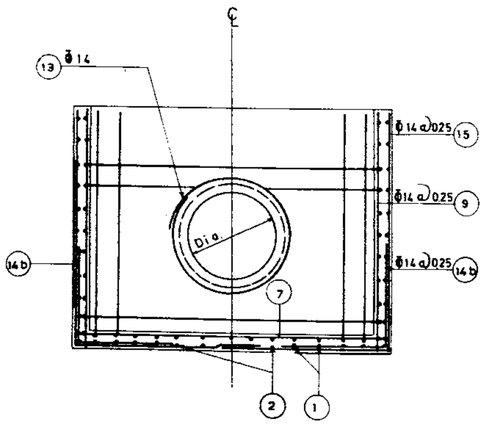

REFERENCE DWGS: For dimension tables see dwg. 16/1/2/01
For list of reinforcement see dwgs. 16/1/3/09 & 16/1/3/10
For plan & sections see dwg. 16/1/1/01

Scale: 1:40	IRRIGATION & DRAINAGE STANDARDS		
Date:	DWG Nº. 16/1/3/05		BAFFLED OUTLET REINFORCEMENT PLAN & SECTIONS GROUP 5
Approved:	Sheet Nº. 7 of 12	Rev Nº.	

ISLAMIC REPUBLIC OF IRAN
MINISTRY OF PLAN & BUDGET
TECHNICAL RESEARCH AND
STANDARD BUREAU

omoorepeyman.ir

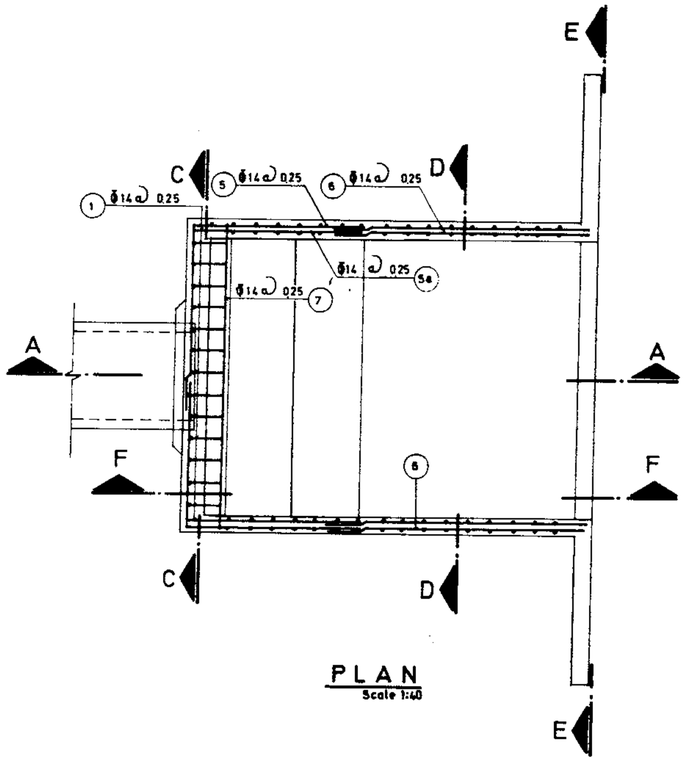

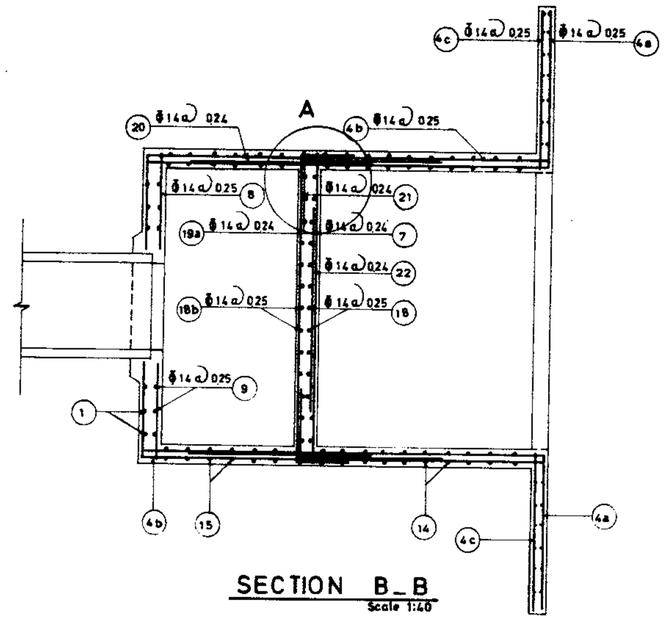

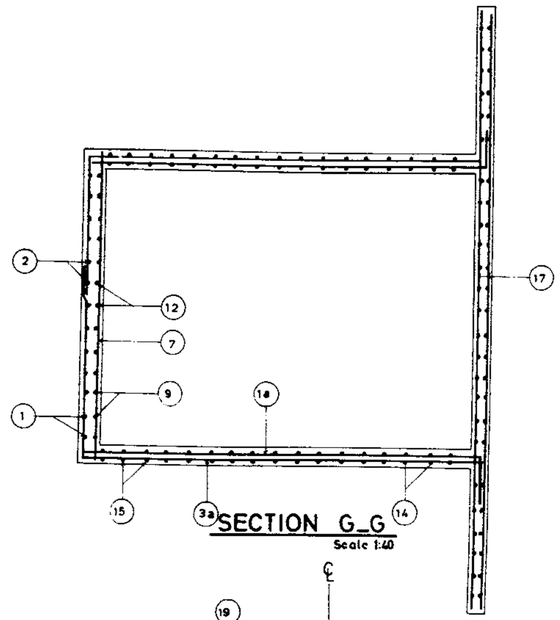

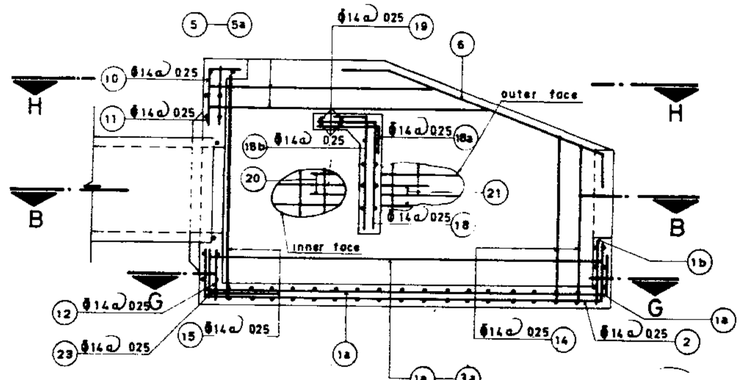

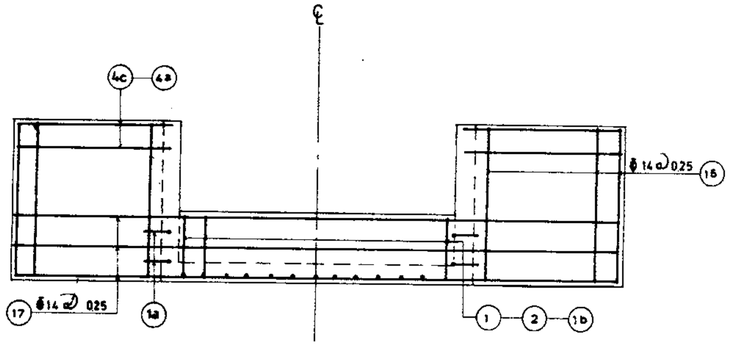

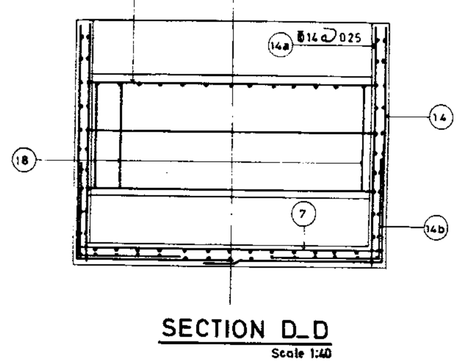

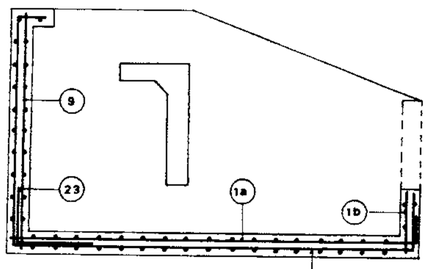

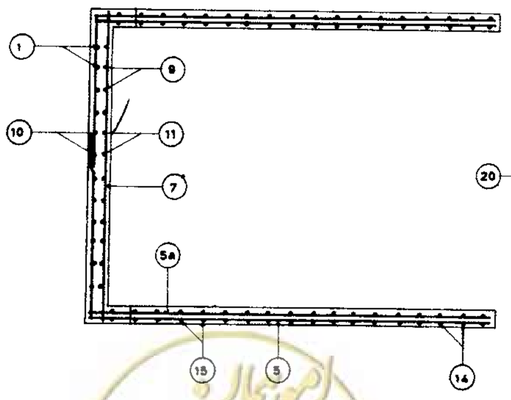

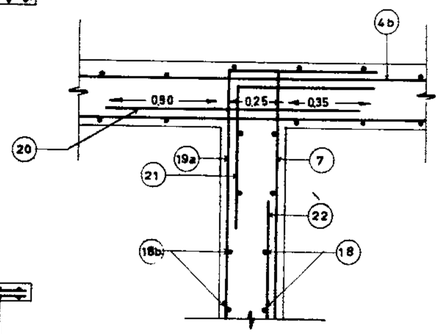

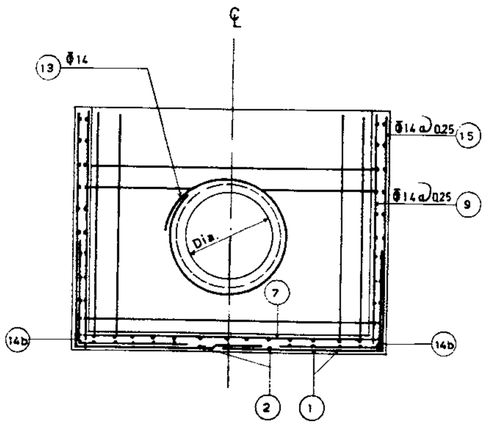

REFERENCE DWGS. For dimension ... see dwg. 16/1/2/01
For list of reinf... ement see dwg 16/1/3/10
For plan & sectio... see dwg. 16/1/1/01

Scale: 1:40	IRRIGATION & DRAINAGE STANDARDS		ISLAMIC REPUBLIC OF IRAN MINISTRY OF PLAN & BUD...
Date:	DWG. No. 16/1/3/06	BAFFLED OUTLET REINFORCEMENT PLAN & SECTIONS GROUP 6	TECHNICAL RESEARCH AND STANDARD BUREAU
Approved:	Sheet No. 8 of 12	Rev. No.	

omoorepeyman.ir

ALL BARS ARE Φ14 (1.21 kg/m)

STR. 100

Pos.	No.	FORM	UNIT LENG.	TOTAL LENG.
1	6	.92 | .35 1.58 .19	3.04	18.24
1a	—		—	—
1b	—		—	—
2	2	.23/.44 | 1.58 .19	2.11	4.22
3	—		—	—
3a	—		—	—
4	4	.25/.58 | 1.58 .73	2.73	10.92
4a	—		—	—
4b	—		—	—
4c	—		—	—
5	2	.78 | .40 .80~1.58 .80~1.58	3.94	7.88
5a	—		—	—
6	2	.40 .90 .30	1.60	3.20
7	3	1.20	1.20	3.60
8	4	.27~.60	0.44	1.76
9	6	.96	0.96	5.76
10	2	.35 | .12~.46	0.64	1.28
11	2	.12~.46	0.29	0.58
12	2	.13~.44	0.29	0.58
13	3	.40 ◯ 2.50	2.50	7.50
14	3	.54/.94 | .78 .40 .78 | .54/.94	3.04	9.12
14a	—		—	—
14b	—		—	—
15	4	.94 | .78 .40 .78 | .94	3.44	13.76
16	8	.54	0.54	4.32
17	2	2.60	2.60	5.20
18	5	.43 .24	0.67	3.35
18a	—		—	—
18b	—		—	—
19	5	.30 | 1.20 | .30	1.80	9.00
19a	—		—	—
20	—		—	—
21	—		—	—
22	—		—	—
23	—		—	—
				110.27

110.27 x 1.21 = 133.43 Kg.

STR. 120

Pos.	No.	FORM	UNIT LENG.	TOTAL LENG.
1	6	1.07 | .35 1.83 .24	3.49	20.94
1a	—		—	—
1b	—		—	—
2	2	.18/.49 | 1.83 .24	2.41	4.82
3	—		—	—
3a	—		—	—
4	4	.35/.68 | 1.83 .88	3.23	12.92
4a	—		—	—
4b	—		—	—
4c	—		—	—
5	3	.88 | .48 .90~1.83 .90~1.83	4.49	13.47
5a	—		—	—
6	2	.40 1.05 .30	1.75	3.50
7	3	1.60	1.60	4.80
8	4	.37~.70	0.54	2.16
9	6	1.11	1.11	6.66
10	2	.35 | .22~.56	0.74	1.48
11	2	.22~.56	0.39	0.78
12	2	.18~.49	0.34	0.68
13	3	.40 ◯ 2.50	2.50	7.50
14	4	.64/1.09 | .88 .40 .88 | .64/1.09	3.49	13.96
14a	—		—	—
14b	—		—	—
15	4	1.09 | .88 .40 .88 | 1.09	3.94	15.76
16	10	0.64	0.64	6.40
17	2	3.10	3.10	6.20
18	6	.48 .29	0.77	4.62
18a	—		—	—
18b	—		—	—
19	5	.30 | 1.40 | .30	2.00	10.00
19a	—		—	—
20	—		—	—
21	—		—	—
22	—		—	—
23	—		—	—
				136.65

136.65 x 1.21 = 165.35 Kg.

STR. 140

Pos.	No.	FORM	UNIT LENG.	TOTAL LENG.
1	8	1.22 | .35 2.13 .29	3.99	31.92
1a	—		—	—
1b	—		—	—
2	2	.23/.54 | 2.13 .29	2.81	5.62
3	—		—	—
3a	—		—	—
4	4	.45/.78 | 2.13 1.03	3.78	15.12
4a	—		—	—
4b	—		—	—
4c	—		—	—
5	3	.98 | .40 1.15~2.13 1.15~2.13	5.24	15.72
5a	—		—	—
6	2	.40 1.12 .30	1.82	3.64
7	4	1.60	1.60	6.40
8	4	.47~.80	0.64	2.56
9	8	1.26	1.26	10.08
10	2	.35 | .32~.66	0.84	1.68
11	2	.32~.66	0.49	0.98
12	2	.23~.54	0.39	0.78
13	3	.40 ◯ 2.50	2.50	7.50
14	4	.74/1.24 | .98 .40 .98 | .74/1.24	3.94	15.76
14a	—		—	—
14b	—		—	—
15	5	1.24 | .98 .40 .98 | 1.24	4.44	22.20
16	10	.74	0.74	7.40
17	2	3.60	3.60	7.20
18	7	.58 .34	0.92	6.44
18a	—		—	—
18b	—		—	—
19	6	.30 | 1.60 | .30	2.20	13.20
19a	—		—	—
20	—		—	—
21	—		—	—
22	—		—	—
23	—		—	—
				174.20

174.20 x 1.21 = 210.78 Kg.

STR. 160

Pos.	No.	FORM	UNIT LENG.	TOTAL LENG.
1	8	1.37 | .35 2.38 .29	4.39	35.12
1a	—		—	—
1b	—		—	—
2	2	.23/.54 | 2.38 .29	3.06	6.12
3	—		—	—
3a	—		—	—
4	4	.55/.88 | 2.38 1.03	4.13	16.52
4a	—		—	—
4b	—		—	—
4c	—		—	—
5	4	1.08 | .40 1.15~2.38 1.15~2.38	5.69	22.76
5a	—		—	—
6	2	.40 1.37 .30	2.07	4.14
7	5	1.80	1.80	9.00
8	4	.50~.90	0.70	2.80
9	8	1.41	1.41	11.28
10	2	.35 | .47~.81	0.99	1.98
11	2	.47~.81	0.64	1.28
12	2	.23~.54	0.39	0.78
13	3	.40 ◯ 2.50	2.50	7.50
14	5	.84/1.39 | 1.08 .40 1.08 | .84/1.39	4.39	21.95
14a	—		—	—
14b	—		—	—
15	5	1.39 | 1.08 .40 1.08 | 1.39	4.94	24.70
16	10	.84	0.84	8.40
17	2	3.80	3.80	7.60
18	8	.63 .34	0.97	7.76
18a	—		—	—
18b	—		—	—
19	6	.30 | 1.80 | .30	2.40	14.40
19a	—		—	—
20	—		—	—
21	—		—	—
22	—		—	—
23	—		—	—
				203.73

203.73 x 1.21 = 246.51 Kg.

REFERENCE DWGS: For reinforcement see dwg. No. 16/1/3/01
For bars with variable unit length see note under the same title at dwg No. 20/2/1/01

Scale	IRRIGATION & DRAINAGE STANDARDS	
Date:	DWG No. 16/1/3/07	BAFFLED OUTLET LIST OF REINFORCEMENT STR 100 TO 160
Approved	Sheet No. 9 of 12 Rev. No.	

ISLAMIC REPUBLIC OF IRAN
MINISTRY OF PLAN & E JET
TECHNICAL RESEARCH A
STANDARD BUREAU

omoorepeyman.ir

ALL BARS ARE ϕ14 (1.21 kg/m)

STR. 180

Pos	Nº	FORM	UNIT LENG	TOTAL LENG.
1	8	1.52 [.35 2.63 .34]	4.84	38.72
1a	—		—	—
1b	—		—	—
2	2	.28/.61 [2.63 .34]	3.42	6.84
3	1	1.18 [.40 2.63 .30] / [2.63 .30]	8.22	8.22
3a	—		—	—
4	4	.62/.98 [2.63 1.28]	4.71	18.84
4a	—		—	—
4b	—		—	—
4c	—		—	—
*5	4	1.18 [.40 1.35~2.63 / 1.35~2.63]	6.34	25.36
5a	—		—	—
6	2	.40 — 1.43 .30	2.13	4.26
7	5	2.0	2.00	10.00
8	4	.64~1.00	0.82	3.28
9	8	1.56	1.56	12.48
10	2	.35 [.52~.88]	1.05	2.10
11	2	.52~.88	0.70	1.40
12	2	.28~.61	0.45	0.90
13	3	.40 (2.66)	2.66	7.98
14	5	.94/1.54 [1.18 .40 1.18] .94/1.54	4.84	24.20
14a	—		—	—
14b	—		—	—
15	6	1.54 [1.18 .40 1.18] 1.54	5.44	32.64
16	12	.89	0.89	10.68
17	2	4.50	4.50	9.00
18	9	.73 [.39]	1.12	10.08
18a	—		—	—
18b	—		—	—
19	7	.30 [2.00] .30	2.60	18.20
19a	—		—	—
20	—		—	—
21	—		—	—
22	—		—	—
23	—		—	—
				245.18

245.18 x 1.21 = 296.67 Kg

STR. 200

Pos	Nº	FORM	UNIT LENG	TOTAL LENG.
1	10	1.67 [.35 2.93 .39]	5.34	53.40
1a	—		—	—
1b	—		—	—
2	2	.31/.73 [2.93 .39]	3.84	7.68
3	1	1.28 [.40 2.93 .30] / [2.93 .30]	9.02	9.02
3a	—		—	—
4	4	.65/1.08 [2.93 1.28]	5.08	20.32
4a	—		—	—
4b	—		—	—
4c	—		—	—
5	4	1.28 [.40 1.45~1.93 / 1.45~1.93]	5.94	23.76
5a	—		—	—
6	2	.40 — 1.63 .30	2.33	4.66
7	5	2.20	2.20	11.00
8	6	.67~1.10	0.89	5.34
9	10	1.71	1.71	17.10
10	2	.35 [.50~.93]	1.07	2.14
11	2	.50~.93	0.72	1.44
12	2	.31~.73	0.52	1.04
13	3	.40 (3.10)	3.10	9.30
14	6	1.04/1.69 [1.28 .40 1.28] 1.04/1.69	5.29	31.74
14a	—		—	—
14b	—		—	—
15	7	1.69 [1.28 .40 1.28] 1.69	5.94	41.58
16	12	1.04	1.04	12.48
17	3	4.70	4.70	14.10
18	9	.78 [.44]	1.22	10.98
18a	—		—	—
18b	—		—	—
19	7	.30 [2.20] .30	2.80	19.60
19a	—		—	—
20	—		—	—
21	—		—	—
22	—		—	—
23	—		—	—
				296.68

296.68 x 1.21 = 358.98 Kg

STR. 220

Pos	Nº	FORM	UNIT LENG	TOTAL LENG
1	10	1.82 [.35 3.18 .39]	5.74	57.40
1a	—		—	—
1b	—		—	—
2	3	.31/.78 [3.18 .39]	4.12	12.36
3	1	1.38 [.40 3.18 .30] / [3.18 .30]	9.72	9.72
3a	—		—	—
4	6	.70/1.18 [3.18 1.43]	5.35	33.30
4a	—		—	—
4b	—		—	—
4c	—		—	—
5	4	1.38 [.40 1.55~3.18 / 1.55~3.18]	7.49	29.96
5a	—		—	—
6	2	.40 — 1.79 .30	2.49	4.98
7	5	2.40	2.40	12.00
8	6	.72~1.20	0.96	5.76
9	10	1.86	1.86	18.60
10	3	.35 [.55~1.03]	1.14	3.42
11	3	.55~1.03	0.79	2.37
12	3	.31~.78	0.55	1.65
13	3	.40 (3.41)	3.41	10.23
14	7	1.14/1.84 [1.38 .40 1.38] 1.14/1.84	5.74	40.18
14a	—		—	—
14b	—		—	—
15	7	1.84 [1.38 .40 1.38] 1.84	5.44	38.08
16	14	1.14	1.14	15.96
17	3	5.20	5.20	15.60
18	10	.90 [.40]	1.30	13.00
18a	—		—	—
18b	—		—	—
19	8	.30 [2.40] .30	3.10	24.80
19a	—		—	—
20	—		—	—
21	—		—	—
22	—		—	—
23	—		—	—
				349.37

349.37 x 1.21 = 422.74 Kg

STR. 240

Pos	Nº	FORM	UNIT LENG	TOTAL LENG.
1	10	1.97 [.35 3.43 .44]	6.19	61.90
1a	—		—	—
1b	—		—	—
2	3	.36/.83 [3.43 .44]	4.47	13.41
3	1	1.49 [.40 3.43 .30] / [3.43 .30]	10.44	10.44
3a	—		—	—
4	6	.81/1.29 [3.48 1.44]	5.97	35.82
4a	—		—	—
4b	—		—	—
4c	—		—	—
5	4	1.49 [.40 1.55~3.43 / 1.55~3.43]	7.96	31.84
5a	—		—	—
6	2	.40 — 2.09 .30	2.79	5.58
7	12	2.66	2.66	31.92
8	6	.85~1.33	1.09	6.54
9	10	2.01	2.01	20.10
10	3	35 [.65~1.13]	1.24	3.72
11	3	.65~1.13	0.89	2.67
12	3	.36~.83	0.60	1.80
13	3	.40 (3.41)	3.41	10.23
14	8	1.24/1.99 [1.49 .40 1.49] 1.24/1.99	6.21	49.68
14a	—		—	—
14b	—		—	—
15	7	1.99 [1.49 .40 1.49] 1.99	6.96	48.72
16	14	1.24	1.24	17.36
17	3	5.46	5.46	16.38
18	11	1.00 [.50]	1.50	16.50
18a	11	.50 [.30]	0.80	8.80
18b	11	1.00 [.30]	1.30	14.30
19	6	.30 [2.66] .30	3.26	19.56
19a	6	.40 [2.66] .40	3.46	20.76
20	—		—	—
21	—		—	—
22	—		—	—
23	—		—	—
				448.03

448.03 x 1.21 = 542.12 Kg

REFERENCE DWGS:

For reinforcement see dwgs. Nº 16/1/3/01 & 16/1/3/02

For bars with variable unit length see note under the same title at dwg.Nº.20/2/1/01

Scale:	IRRIGATION & DRAINAGE STANDARDS	
Date:	DWG Nº. 16/1/3/08	BAFFLED OUTLET LIST OF REINFORCEMENT STR. 180 TO 240
Approved:	Sheet Nº. 10 of 12 Rev Nº.	

ISLAMIC REPUBLIC OF IRAN
MINISTRY OF PLAN & BUDGET
TECHNICAL RESEARCH AFFAIRS
STANDARD BUREAU

omoorepeyman.ir

ALL BARS ARE Φ14(1.21 kg/m)

STR. 260

Pos.	No.	FORM	UNIT LENG.	TOTAL LENG.
1	10	2.19 .35 3.80 .57	6.91	69.10
1a	16	3.80 .30	4.10	65.60
1b	12	.57	0.57	6.84
2	3	.67/.95 3.80 .57	5.18	15.54
3	—		—	—
3a	2	1.65 .40 3.80 3.80	10.90	21.80
4	—		—	—
4a	6	3.80 1.60	5.40	32.40
4b	6	.90~1.45 3.80	4.98	29.88
4c	10	1.60	1.60	16.00
5	4	1.65 .40 1.80~3.80 1.80~3.80	8.90	35.60
5a	8	1.80~3.80	5.60	44.80
6	4	.40 2.15 .30	2.85	11.40
7	27	2.90	2.90	78.30
8	6	.90~1.45	1.18	7.08
9	22	2.20	2.20	48.40
10	3	.35 .63~1.18	1.26	3.78
11	3	.63~1.18	0.91	2.73
12	3	.47~.95	0.71	2.13
13	3	.40 3.85	3.85	11.55
14	8	1.42~2.22 1.65 .40 1.65 1.42~2.22	6.94	55.52
14a	16	1.42~2.22	1.82	29.12
14b	—		—	—
15	8	2.22 1.65 .40 1.65 2.22	7.74	61.92
16	28	1.42	1.42	39.76
17	6	5.90	5.90	35.40
18	12	1.10 .55	1.65	19.80
18a	12	.55 .30	0.85	10.20
18b	12	1.10 .30	1.40	16.80
19	8	.30 2.90 .30	3.50	28.00
19a	6	.70 2.90 .70	4.30	25.80
20	—		—	—
21	—		—	—
22	—		—	—
23	—		—	—
			825.25	

825.25 × 1.21 = 998.55 Kg.

STR. 280

Pos.	No.	FORM	UNIT LENG.	TOTAL LENG.
1	12	2.34 .35 4.05 .57	7.31	87.72
1a	17	4.05 .30	4.35	73.95
1b	13	.57	0.57	7.41
2	4	.67/1.00 4.05 .57	5.46	21.84
3	—		—	—
3a	2	1.75 .40 4.05 4.05	11.60	23.20
4	—		—	—
4a	6	4.05 1.60	5.65	33.90
4b	8	.95/1.55 4.05	5.30	42.40
4c	10	1.60	1.60	16.00
5	5	1.75 .40 1.80~4.05 1.80~4.05	9.35	46.75
5a	10	1.80	1.80	18.00
6	4	.30 2.41 .30	3.11	12.44
7	29	3.10	3.10	89.90
8	8	.95~1.55	1.25	10.00
9	24	2.35	2.35	56.40
10	4	.35 .68~1.28	1.33	5.32
11	4	.68~1.28	0.98	3.92
12	4	.47~1.00	0.74	2.96
13	3	.40 4.17	4.17	12.51
14	9	1.52/2.37 1.75 .40 1.75 1.52/2.37	7.39	66.51
14a	18	1.52~2.37	1.95	35.10
14b	—		—	—
15	8	2.37 1.75 .40 1.75 2.37	8.24	65.92
16	28	1.52	1.52	42.56
17	6	6.10	6.10	36.60
18	13	1.15 .55	1.70	22.10
18a	13	.55 .30	0.85	11.05
18b	13	1.15 .30	1.45	18.85
19	8	.30 3.10 .30	3.70	29.60
19a	6	.70 3.10 .70	4.50	27.00
20	—		—	—
21	—		—	—
22	—		—	—
23	—		—	—
			919.91	

919.91 × 1.21 = 1113.09 Kg.

STR. 300

Pos.	No.	FORM	UNIT LENG.	TOTAL LENG.
1	12	2.49 .35 4.30 .62	7.76	93.12
1a	18	4.30 .30	4.60	82.80
1b	13	.62	0.62	8.06
2	4	.72/1.10 4.30 .62	5.83	23.32
3	—		—	—
3a	2	1.85 .40 4.30 4.30	12.30	24.60
4	—		—	—
4a	6	4.30 1.80	6.10	36.60
4b	8	1.00/1.65 4.30	5.63	45.04
4c	10	1.80	1.80	18.00
5	5	1.85 .40 1.95~4.30 1.95~4.30	9.95	49.75
5a	10	1.95 ~ 4.30	3.13	31.30
6	4	.40 2.52 .30	3.22	12.88
7	31	3.30	3.30	102.30
8	8	1.00~1.65	1.33	10.64
9	26	2.50	2.50	65.00
10	4	.35 .68~1.33	1.36	5.44
11	4	.68~1.33	1.01	4.04
12	4	.52~1.10	0.81	3.24
13	3	.40 4.48	4.48	13.44
14	9	1.62~1.52 1.85 .40 1.85 1.62~1.52	6.84	61.56
14a	18	1.62~2.52	2.07	37.26
14b	34	.75 .75	1.50	51.00
15	9	2.52 1.85 .40 1.85 2.52	8.74	78.66
16	32	1.62	1.62	51.84
17	6	6.70	6.70	40.20
18	13	1.25 .65	1.90	24.70
18a	13	.65 .30	0.95	12.35
18b	13	1.25 .30	1.55	20.15
19	8	.30 3.30 .30	3.90	31.20
19a	7	.90 3.30 .90	5.10	35.70
20	—		—	—
21	—		—	—
22	—		—	—
23	13	.75 .75	1.50	19.50
			1093.69	

1093.69 × 1.21 = 1323.36 Kg.

STR. 320

Pos.	No.	FORM	UNIT LENG.	TOTAL LENG.
1	12	2.67 .45 4.65 .70	8.47	101.64
1a	19	4.65 .30	4.95	94.05
1b	15	.70	0.70	10.50
2	5	.87/1.27 4.65 .70	6.42	32.10
3	—		—	—
3a	2	2.00 .40 4.65 4.65	13.30	26.60
4	—		—	—
4a	8	4.65 1.85	6.50	52.00
4b	10	1.03/1.80 4.65	6.07	60.70
4c	12	1.85	1.85	22.20
5	4	2.00 .40 2.10 ~4.65 2.10 ~4.65	10.75	43.00
5a	8	210~4.65	3.38	27.04
6	4	.40 2.72 .30	3.42	13.68
7	33	3.60	3.60	118.80
8	10	1.23~1.80	1.52	15.20
9	26	2.68	2.68	69.68
10	5	.45 .56~1.33	1.40	7.00
11	5	.56~1.33	0.95	4.75
12	5	.58~1.27	0.93	4.65
13	3	.40 5.24	5.24	15.72
14	10	1.75/2.70 2.00 .40 2.00 1.75/2.70	8.45	84.50
14a	20	1.75~2.70	2.23	44.60
14b	36	.90 .90	1.80	64.80
15	9	2.70 2.00 .40 2.00 2.70	9.40	84.60
16	32	1.75	1.75	56.00
17	8	7.00	7.00	56.00
18	14	1.30 .70	2.00	28.00
18a	14	.70 .30	1.00	14.00
18b	14	1.30 .30	1.60	22.40
19	8	.30 3.60 .30	4.20	33.60
19a	8	1.00 3.60 1.00	5.60	44.80
20	—		—	—
21	—		—	—
22	—		—	—
23	14	.75 .75	1.50	21.00
			1273.61	

1273.61 × 1.21 = 1541.07 Kg.

REFERENCE DWGS: For reinforcement see dwgs. No. 16/1/3/03 TO 16/1/3/05
For bars with variable unit length see note under the same title at dwg. No. 20/2/1/01

Scale:	IRRIGATION & DRAINAGE STANDARDS		
Date:	DWG No. 16/1/3/09	BAFFLED OUTLET LIST OF REINFORCEMENT STR. 260 TO 320	
Approved	Sheet No. 11 of 12	Rev. No.	

ISLAMIC REPUBLIC OF IRAN
MINISTRY OF PLAN & [illegible]JET
TECHNICAL RESEARCH AND STANDARD BUREAU

omoorepeyman.ir

ALL BARS ARE Φ14 (1.21 kg/m)

STR. 340

Pos.	No.	FORM	UNIT LENG.	TOTAL LENG.
1	12	2.82 .45 4.90 .70	8.87	106.44
1a	20	4.90	5.20	104.00
1b	15	.70	0.70	10.50
2	5	.87/1.27 4.90 .70	6.67	33.35
3	—		—	—
3a	2	2.10 .40 4.90 .490	14.00	28.00
4	—		—	—
4a	8	4.90 .205	6.95	55.60
4b	10	.113/1.90 4.90	6.42	64.20
4c	12	.205	2.05	24.60
5	5	2.30 .40 2.25 ~ 4.90 2.25 ~ 4.90	11.35	56.75
5a	10	2.25 ~ 4.90	3.58	35.80
6	4	.40 2.83 .30	3.53	14.12
7	35	3.80	3.80	133.00
8	10	.113 ~ 1.90	1.52	15.20
9	28	2.83	2.83	79.24
10	5	.45 .71 ~ 1.48	1.55	7.75
11	5	.71 ~ 1.48	1.10	5.50
12	5	.58 ~ 1.27	0.93	4.65
13	3	.40 5.24	5.24	15.72
14	10	1.85/2.85 2.10 .40 2.10 1.85/2.85	8.90	89.00
14a	20	1.85 ~ 2.85	2.35	47.00
14b	38	.90 .90	1.80	68.40
15	10	2.85 2.10 .40 2.10 2.85	9.90	99.00
16	36	1.85	1.85	66.60
17	8	7.60	7.60	60.80
18	15	1.40 .70	2.10	31.50
18a	15	.70 .30	1.00	15.00
18b	15	1.40 .30	1.70	25.50
19	8	.30 3.80 .30	4.40	35.20
19a	9	1.00 3.80 1.00	5.80	52.20
20	—		—	—
21	—		—	—
22	—		—	—
23	15	.75 .75	1.50	22.50
				1287.42

1287.42 × 1.21 = 1557.78 Kg.

STR. 360

Pos.	No.	FORM	UNIT LENG.	TOTAL LENG.
1	14	3.02 .80 5.20 .80	9.52	133.28
1a	22	5.20 .30	5.50	121.00
1b	15	.80	0.80	12.00
2	5	.92/1.32 5.20 .80	7.12	35.60
3	—		—	—
3a	2	2.25 .40 5.20 5.20	14.90	29.80
4	—		—	—
4a	8	5.25 2.20	7.45	59.60
4b	12	1.29/2.05 5.25	6.92	83.04
4c	12	2.20	2.20	26.40
5	5	2.25 .40 2.45 ~ 5.20	12.15	60.75
5a	10	2.45 ~ 5.20	3.83	38.30
6	4	.40 3.00 .30	3.70	14.80
7	36	4.10	4.10	147.60
8	10	1.28 ~ 2.05	1.67	16.70
9	30	3.03	3.03	90.90
10	5	.50 .81 ~ 1.58	1.70	8.50
11	5	.81 ~ 1.58	1.20	6.00
12	5	.68 ~ 1.32	1.00	5.00
13	3	.40 5.24	5.24	15.72
14	11	2.00/3.05 2.25 .40 2.25 2.00/3.05	9.55	105.05
14a	22	2.00 ~ 3.05	2.53	55.66
14b	42	1.20 .90	2.10	88.20
15	10	3.05 2.25 .40 2.25 3.05	10.60	106.00
16	36	2.00	2.00	72.00
17	8	8.10	8.10	64.80
18	15	1.45 .75	2.20	33.00
18a	15	.75 .30	1.05	15.75
18b	15	1.45 .30	1.75	26.25
19	8	.30 4.10 .30	4.70	37.60
19a	8	.60 4.10 .60	5.30	42.40
20	7	.90 .25 .35	1.50	10.50
21	14	1.20 1.40	2.60	36.40
22	7	2.50	2.50	17.50
23	15	.90 1.30	2.20	33.00
				1649.10

1649.10 × 1.21 = 1995.41 Kg.

STR. 380

Pos.	No.	FORM	UNIT LENG.	TOTAL LENG.
1	14	3.17 .80 5.50 .85	10.02	140.28
1a	23	5.50 .30	5.80	133.40
1b	17	.85	0.85	14.45
2	6	.97/1.47 5.50 .85	7.57	45.42
3	—		—	—
3a	3	2.35 .40 5.50 5.50	15.70	47.10
4	—		—	—
4a	8	5.50 2.20	7.70	61.60
4b	12	1.28/2.15 5.50	7.22	86.64
4c	12	2.20	2.20	26.40
5	5	2.35 .40 2.55 ~ 5.50 2.55 ~ 5.50	12.75	63.75
5a	10	2.55 ~ 5.50	4.03	40.30
6	4	.40 3.15 .30	3.85	15.40
7	37	4.30	4.30	159.10
8	12	1.28 ~ 2.15	1.72	20.64
9	30	3.18	3.18	95.40
10	6	.50 .71 ~ 1.58	1.65	9.90
11	6	.71 ~ 1.58	1.15	6.90
12	6	.73 ~ 1.47	1.10	6.60
13	3	40 5.86	5.86	17.58
14	24	2.10/3.20 2.35 .40 2.35 2.10/3.20	10.00	120.00
14a	24	2.10 ~ 3.20	2.65	63.60
14b	42	1.20 .90	2.10	88.20
15	11	3.20 2.35 .40 2.35 3.20	11.10	122.10
16	36	2.10	2.10	75.60
17	8	8.30	8.30	66.40
18	16	1.55 .80	2.35	37.60
18a	16	.80 .30	1.10	17.60
18b	16	1.55 .30	1.85	29.60
19	8	.30 4.30 .30	4.90	39.20
19a	8	.60 4.30 .60	5.50	44.00
20	7	.90 .25 .35	1.50	10.50
21	14	1.20 1.40	2.60	36.40
22	7	2.50	2.50	17.50
23	16	.90 1.30	2.20	35.20
				1784.76

1784.76 × 1.21 = 2159.56 Kg.

STR. 400

Pos.	No.	FORM	UNIT LENG.	TOTAL LENG.
1	14	3.32 .50 5.75 .85	10.42	145.88
1a	24	5.75 .30	6.05	145.20
1b	18	.85	0.85	15.30
2	6	.97/1.47 5.75 .85	7.82	46.72
3	—		—	—
3a	3	2.45 .40 5.75 5.75	16.40	49.20
4	—		—	—
4a	8	5.80 2.20	8.00	64.00
4b	12	1.38/2.25 5.80	7.62	91.44
4c	14	2.20	2.20	30.80
5	5	2.45 .40 2.55 ~ 5.75 2.55 ~ 5.75	13.20	66.00
5a	10	2.55 ~ 5.75	8.30	83.00
6	4	.40 3.45 .30	4.15	16.60
7	39	4.50	4.50	175.50
8	12	1.38 ~ 2.15	1.82	21.84
9	32	3.33	3.33	106.56
10	6	.50 .86 ~ 1.73	1.80	10.80
11	6	.86 ~ 1.73	1.30	7.80
12	6	.73 ~ 1.47	1.10	6.60
13	3	.40 5.86	5.86	17.58
14	13	2.20/3.35 2.45 .40 2.45 2.20/3.35	10.45	135.85
14a	26	2.20 ~ 3.35	2.78	72.28
14b	44	1.20 .90	2.10	92.40
15	11	3.35 2.45 .40 2.45 3.35	11.60	127.60
16	36	2.20	2.20	79.20
17	8	8.50	8.50	68.00
18	17	1.60 .80	2.40	40.80
18a	17	.80 .30	1.10	18.70
18b	17	1.60 .30	1.90	32.30
19	8	.30 4.50 .30	5.10	40.80
19a	8	.60 4.50 .60	5.70	45.60
20	7	.90 .25 .35	1.50	10.50
21	14	1.20 1.40	2.60	36.40
22	7	2.50	2.50	17.50
23	17	.90 1.30	2.20	37.40
				1946.16

1946.16 × 1.21 = 2354.85 Kg.

REFERENCE DWGS For reinforcement see dwgs. No. 16/1/3/05 & 16/1/3/06
For bars with variable unit length see note under the same title at dwg.No. 20/2/1/09

Scale:

Date:

Approved:

IRRIGATION & DRAINAGE STANDARDS

DWG. No. 16/1/3/10

Sheet No. 12 of 12 Rev. No.

BAFFLED OUTLET
LIST OF REINFORCEMENT
STR. 340 TO 400

ISLAMIC REPUBLIC OF IRAN
MINISTRY OF PLAN & BUDGET
TECHNICAL RESEARCH & STANDARD BUREAU

omoorepeyman.ir

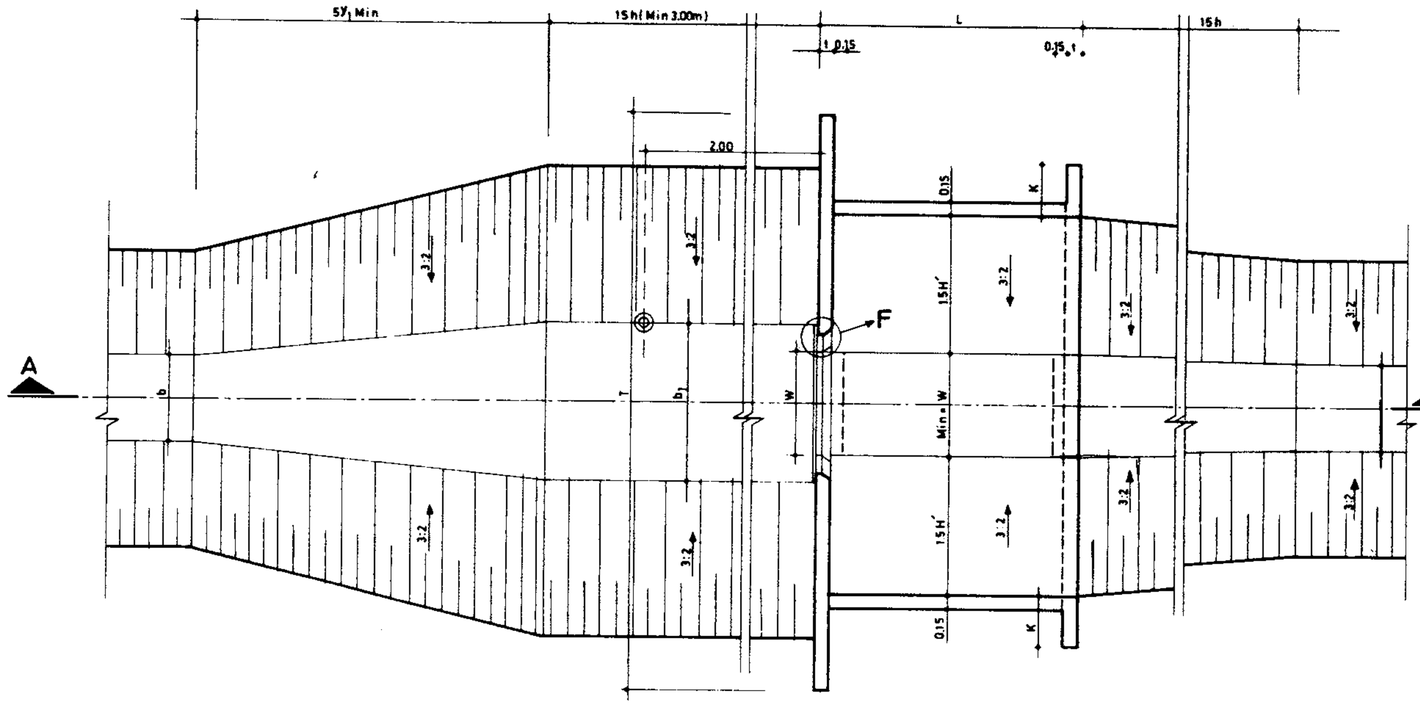

PLAN
Scale 1:50

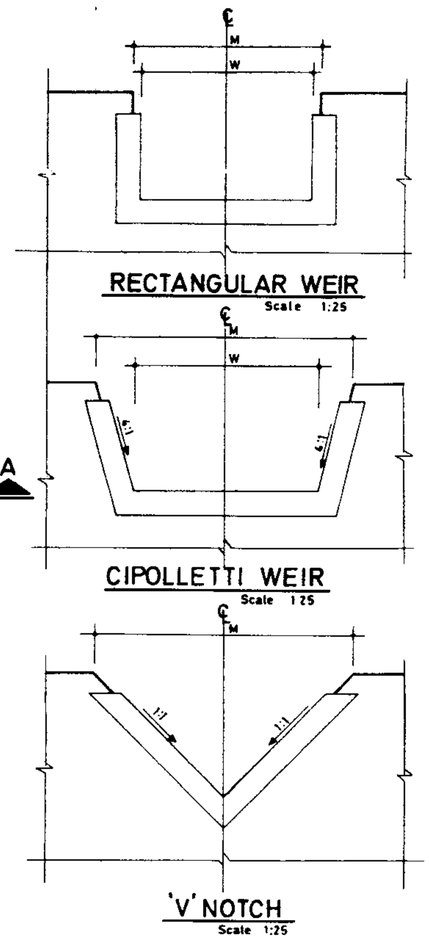

RECTANGULAR WEIR
Scale 1:25

CIPOLLETTI WEIR
Scale 1:25

'V' NOTCH
Scale 1:25

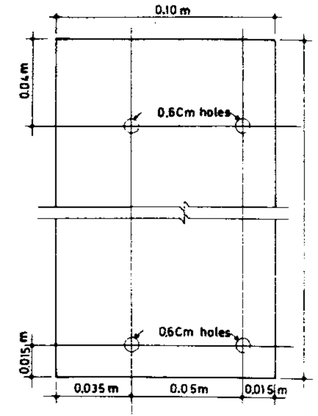

BAR DETAIL
Not to scale

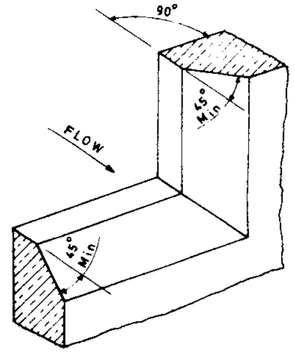

DETAIL F
Not to scale

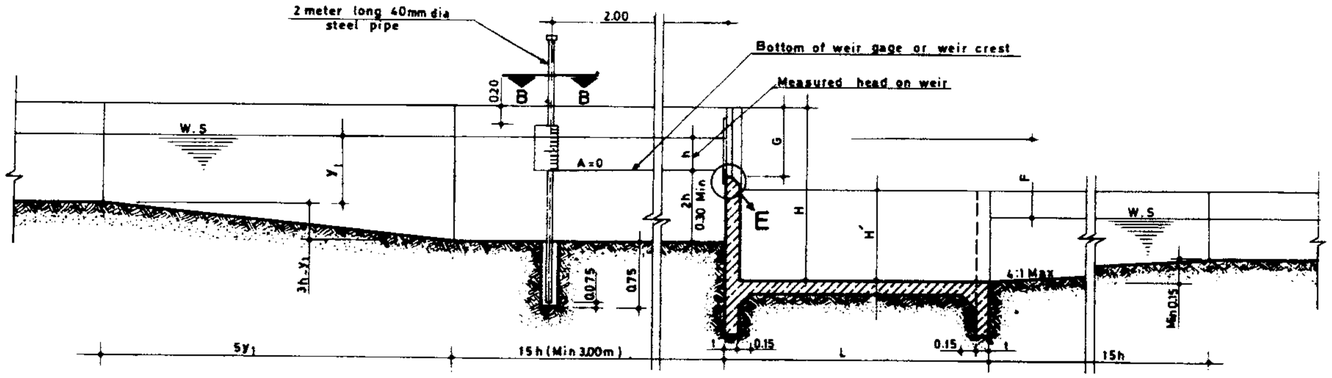

SECTION A_A
Scale 1:50

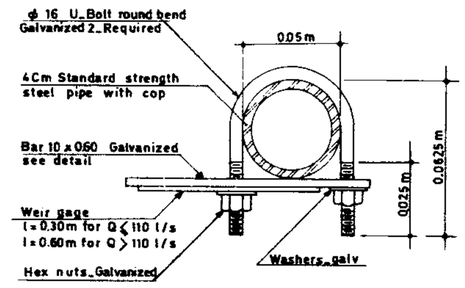

SECTION B_B
Not to scale

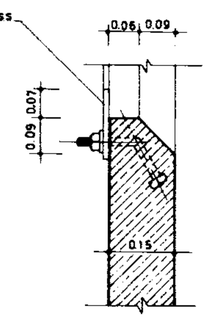

DETAIL E
scale 1:10

REFERENCE DWGS : _For construction detail of weir see dwg Nº 15/2/1/01

Scale: 1:50	IRRIGATION & DRAINAGE STANDARDS		
Date :	DWG. Nº 15/3/1/01		WEIR GAGE INSTALLATION PLAN & SECTIONS
Approved :	Sheet Nº 1 of 1	Rev Nº	

ISLAMIC REPUBLIC OF IRAN
MINISTRY OF PLAN & BUDGET
TECHNICAL OF RESEARCH AND STANDARD BUREAU

omoorepeyman.ir

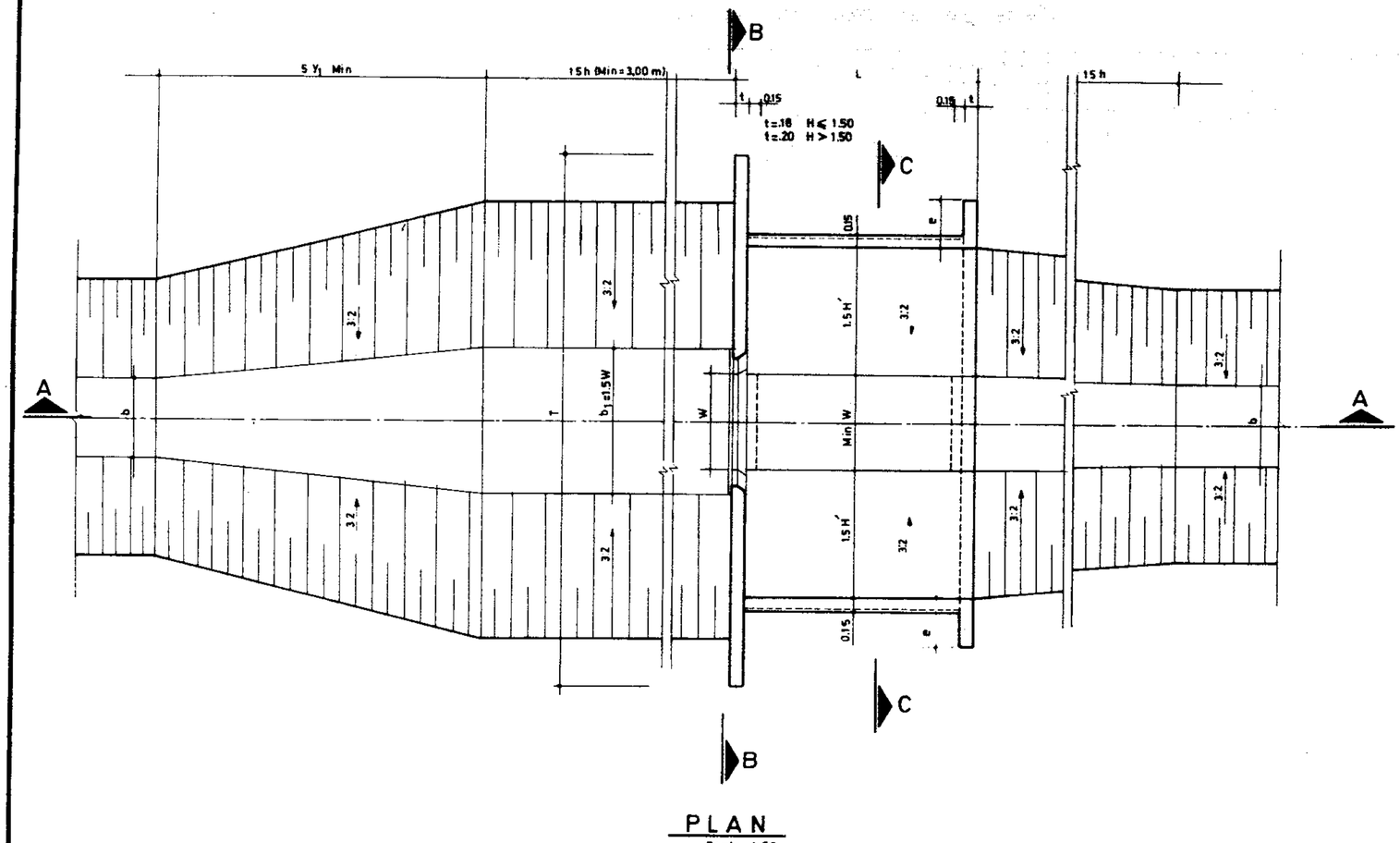

PLAN
Scale 1:50

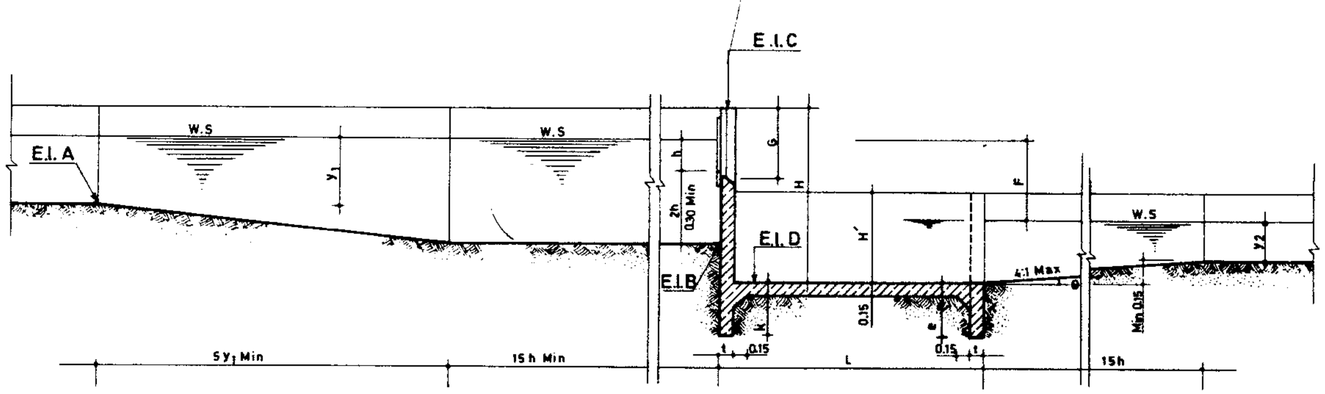

SECTION A_A
Scale 1:50

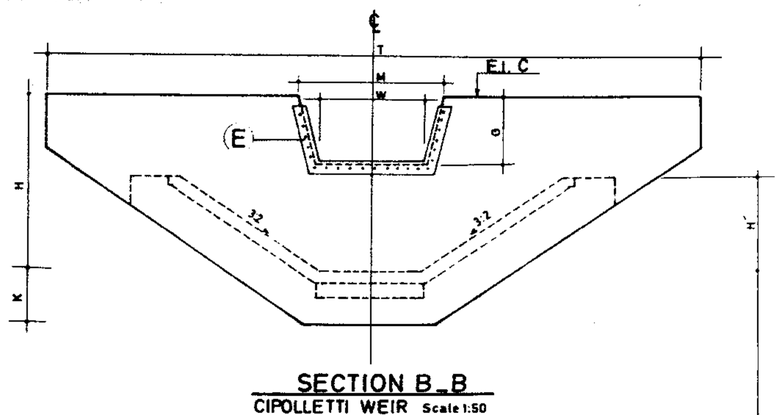

SECTION B_B
CIPOLLETTI WEIR Scale 1:50

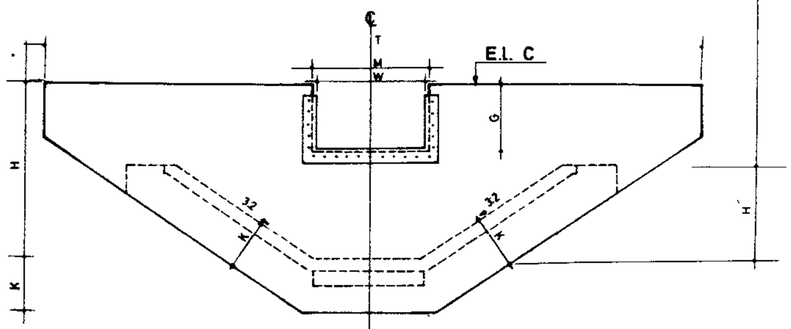

SECTION B_B
RECTANGULAR WEIR Scale 1:50

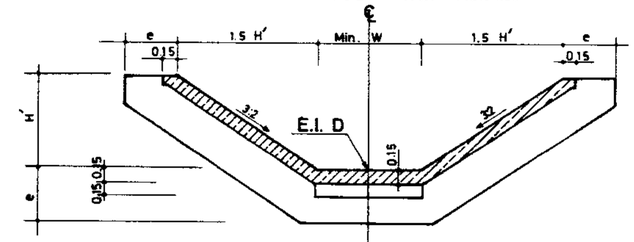

SECTION C_C
Scale 1:50

REFERENCE DWGS :
- For reinforcement see dwg №. 15/2/3/01
- For dimension tables see dwg №. 15/2/2/01
- For general notes see dwgs №. 20/2/1/01 To 20/2/1/03

Scale : 1:50	IRRIGATION & DRAINAGE STANDARDS	
Date :	DWG. №. 15/2/1/01	CONTRACTED CIPOLLETTI AND RECTANGULAR WEIR PLAN & SECTIONS
Approved :	Sheet №. 1 of 6 / Rev. №.	

ISLAMIC REPUBLIC OF IRAN
MINISTRY OF PLAN & BUDGET
TECHNICAL OF RESEARCH AND STANDARD BUREAU

omoorepeyman.ir

SELECTING RECTANGULAR WEIR STRUCTURE & CALCULATING REQUIRED DIMENSIONS AND WEIR SETTING.

STEP 1: Collect the following data:

- Q in m^3/s
- Canal wide (b)
- Normal water depth at upstream Y_1
- Normal water depth at downstream Y_2
- Available drop between upstream & downstream of water surfaces ΔH
- Upstream canal invert elevation EL.A
- Downstream canal invert elevation EL.E

STEP 2: If $Q \leq 0.52$ then select the structure having the least weir lenght for Qmax which can be adopted to available drop from standard Dimension table, then read dimensions W, L, H, H' b_1, k, e & T; GOTO step3 otherwise: From general data table select the structure having the least weir lenght for Qmax which can be adopted to availabue drop, then read W

STEP 3: From Rectangular weir table at appendix A of publication No. 106 read the value of head (h) corresponding to the given Q

From the Anchor Bold & weir blade Data, read the value of G

STEP 4: $b_1 = 1.5\,W$

EL.B = EL.A + Y_1 − 2h − h

EL.C = EL.B + 2h + G − .05

Not: if $2h < 0.30$m Then use $2h = 0.30$m

IF $Q < 0.52$ m/s then goto Step 7. otherwise:

EL.D = EL.A + Y_1 − (ΔH) − Y_2 + 0.15

H = EL.C − EL.D

H' = 0.15 + Y_2 + Structure freeboard

L = 3h + 2F

STEP 5: From the following table select the cutoff depth and then calculate Kmin.

3h (m)	cut off depth (m)	cut off thickness (m)
0 – 0.90	0.60	0.15
90–1.80	0.75	0.20
> 1.80	0.90	0.20

K = Cut off depth − (EL.B − EL.D)

STEP 6: Calculate weighted creep lenght (W.C.L) by lane method.

W.C.L = (EL.B − EL.D) + K + 2(K − 0.15) + (K − Protection thickness)

Calculate (ΔWS) for upstream water ponded to weir crest and downstream water at canal invert $\Delta WS = (EL.B + 2h) - (EL.D + .15)$ percolation factor = W.C.L / Δ WS

IF calculated percolation > recommended percolation factor GOTO Step 8. otherwise increase K and goto Step 6

STEP 7: EL.D = EL.C − H

t = 0.15 m

STEP 8: $T = b_1 + 3(2h + G - 0.05) + 2K$

STEP 9: Use Anchor Bolt and weir blade Data from the corresponding tables.

STANDARD DIMENSIONS for $Q \leq 0.52$ m^3/s

STR Nº	W (m)	Qmax (m^3/s)	hmax (m)	ΔH for Qmax min	ΔH for Qmax max	L (m)	H (m)	H' (m)	bi (m)	k (m)	e (m)	T (m)
R 30	.30	.0163	.10	.10		1.20	.75	.60	.45	.45	.45	3.10
R 30A	.30	.0163	.10		.90	2.10	1.50	.60	.45	.45	.45	3.10
R 40	.40	.0322	.13	.13		1.20	.85	.65	.60	.45	.45	3.60
R 40 A	.40	.0322	.13		.90	2.20	1.60	.65	.60	.45	.45	3.60
R 50	.50	.0551	.16	.16		1.20	.90	.70	.75	.45	.45	4.10
R 50A	.50	.0551	.16		.90	2.30	1.65	.70	.75	.45	.45	4.10
R 60	.60	.0921	.20	.20		1.20	1.00	.75	.90	.45	.45	4.60
R 60A	.60	.0921	.20		.90	2.40	1.70	.75	.90	.45	.60	4.60
R 70	.70	.1326	.23	.23		1.30	1.10	.80	1.05	.45	.60	5.00
R 70 A	.70	.1326	.23		.90	2.50	1.75	.80	1.05	.45	.60	5.00
R 80	.80	.1823	.26	.26		1.45	1.15	.85	1.20	.45	.60	5.50
R 80 A	.80	.1823	.26		.90	2.60	1.80	.85	1.20	.45	.60	5.50
R 90	.90	.2537	.30	.30		1.60	1.25	.90	1.35	.45	.60	6.00
R 90 A	.90	.2537	.30		.90	2.70	1.85	.90	1.35	.45	.60	6.00
R 100	1.00	.3254	.33	.33		1.75	1.35	.95	1.50	.60	.60	6.60
R 100A	1.00	.3254	.33		.90	2.80	1.90	.95	1.50	.60	.60	6.60
R 120	1.20	.5208	.40	.40		2.00	1.50	1.05	1.80	.60	.60	7.50
R 120 A	1.20	.5208	.40		.90	3.00	2.00	1.05	1.80	.60	.60	7.50

GENERAL DATA for $Q > 0.52$ m^3/s

STR Nº	W (m)	Qmax (m^3/s)	hmax (m)	ΔH for Qmax min	ΔH for Qmax max
R 140	1.40	0.7500	.46	.46	
R 140 A	1.40	0.7500	.46		0.90
R 160	1.60	1.0595	.53	.53	
R 160A	1.60	1.0595	.53		0.90
R 180	1.80	1.4351	.60	.60	
R 180A	1.80	1.4351	.60		0.90
R 200	2.00	1.6059	.60	.60	
R 200A	2.00	1.6059	.60		0.90
R 220	2.20	1.7768	.60	.60	
R 220 A	2.20	1.7768	.60		0.90
R 240	2.40	1.9476	.60	.60	
R 240 A	2.40	1.9476	.60		0.90
R 260	2.60	2.1185	.60	.60	
R 260A	2.60	2.1185	.60		0.90
R 280	2.80	2.2893	.60	.60	
R 280 A	2.80	2.2893	.60		0.90
R 300	3.00	2.4602	.60	.60	
R 300 A	3.00	2.4602	.60		0.90

ANCHOR BOLT AND WEIR BLADE DATA for $Q \leq 0.52$ m^3/s

STR Nº	W (m)	M (m)	G (m)	A (m)	B (m)	C (m)	D Nº @ (m)	E (m)	F (m)	Total Nº of hole
R 30 & R 30A	.30	.40	.45	.60	.20	.25	——	.10	——	7
R 40 & R 40A	.40	.50	.50	.70	.25	.30	——	.15	——	7
R50 & R50A	.50	.60	.55	.80	.25	.35	——	.15	——	7
R60 & R60A	.60	.70	.60	.90	.30	.20	2@.20	.20	——	9
R 70 & R70 A	.70	.80	.60	1.00	.35	.25	2@.20	.25	——	9
R80 & R80 A	.80	.90	.65	1.10	.35	.25	2@.25	.25	——	9
R 90 & R90A	.90	1.00	.70	1.20	.40	.30	2@.25	.30	——	9
R 100 & R100A	1.00	1.10	.70	1.30	.45	.30	2@.30	.35	——	9
R120 & R120A	1.20	1.30	.80	1.50	.50	.20	4@.25	.20	.20	13

ANCHOR BOLT AND WEIR BLADE DATA for $Q > 0.52$ m^3/s

STR Nº	W (m)	M (m)	G (m)	A (m)	B (m)	C (m)	D Nº @ (m)	E (m)	F (m)	Total Nº of holes
R140 & R140 A	1.40	1.50	.85	1.70	.55	.30	4 @ .25	.20	.25	13
R160 & R160 A	1.60	1.70	.90	1.90	.65	.30	4 @ .30	.25	.30	13
R180 & R180 A	1.80	1.90	1.00	2.10	.70	.40	4 @ .30	.30	.30	13
R200 & R200 A	2.00	2.10	1.00	2.30	.70	.35	6 @ .25	.30	.30	15
R220 & R220 A	2.20	2.30	1.00	2.50	.70	.30	6 @ .30	.30	.30	15
R240 & R240 A	2.40	2.50	1.00	2.70	.70	.40	6 @ .30	.30	.30	15
R260 & R260A	2.60	2.70	1.00	2.90	.70	.20	8 @ .30	.30	.30	17
R280 & R280A	2.80	2.90	1.00	3.10	.70	.30	8 @ .30	.30	.30	17
R300 & R300A	3.00	3.10	1.00	3.30	.70	.40	8 @ .30	.30	.30	17

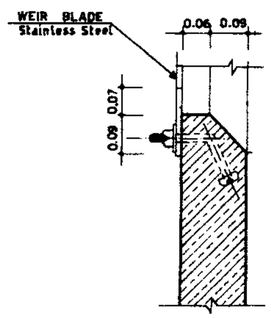

SECTION D–D
Scale 1:10

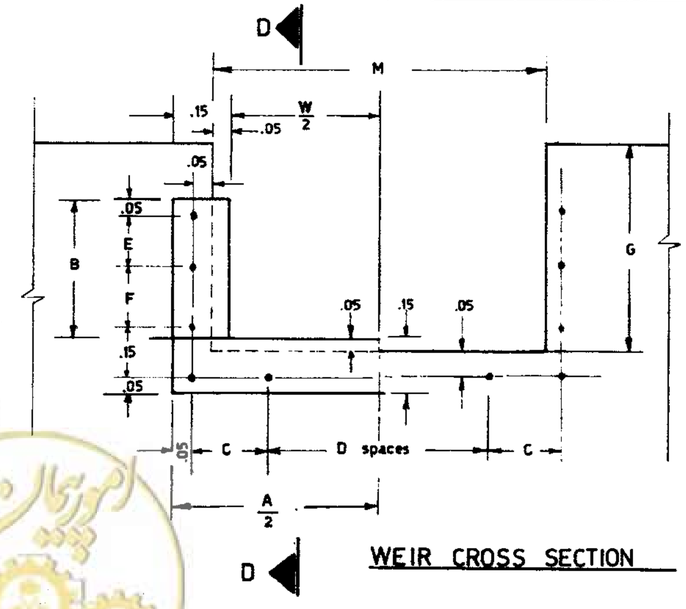

WEIR CROSS SECTION

NOTES:

1–Maximum allowable drop in water surface (ΔH) is 0.90 meter.

2–Minimum drop in water surface (ΔH) is equal to head (h), on the weir for designed discharge.

3–Dimension H has provided 0.30 meter freeboard over the hmax for Q max.

4–Dimension H' provides min 0.30 meter freeboard for the following assumed y_2 values.

STR Nº	y_2 (m)
R 30 & R 30 A	0.15
R 40 & R 40 A	0.20
R 50 & R50A	0.25
R60 & R 60A	0.30
R70 & R70A	0.35
R80 & R 80 A	0.40
R90 & R 90 A	0.45
R100 & R100 A	0.50
R120 & R120A	0.60

Quantities: $Q \leq 0.52$ m^3/s

	STR No.	30	30A	40	40A	50	50A	60	60A	70	70A	80	80A	90	90A	100	100A	120	120A
RECTAN-GULAR WEIR	R/Bar kg	99.72	179.16	136.28	313.79	120.21	322.85	150.42	413.34	158.20	427.64	177.94	469.03	212.48	484.88	222.41	449.76	278.32	607.35
	Conc.	0.97	1.68	1.15	2.23	1.26	2.32	1.51	3.04	1.93	3.29	1.96	3.71	2.28	4.08	2.75	4.52	3.46	5.31
	Form	8.70	13.44	10.12	15.86	11.02	16.90	12.98	22.32	17.54	23.92	17.50	25.60	19.78	27.24	21.34	29.30	25.90	28.86

REFERENCE DWGS:

Scale:	IRRIGATION & DRAINAGE STANDARDS	
Data:	DWG Nº 15/2/2/01	CONTRACTED RECTANGULAR WEIR (DIMENSION TABLES)
Approved:	Sheet Nº 2 of 6 Rev. Nº	

ISLAMIC REPUBLIC OF IRAN
MINISTRY OF PLAN : BUDJET
TECHNICAL RESEAR AND
STANDARD B RAU

omoorepeyman.ir

SELECTING CIPOLLETTI WEIR STRUCTURE & CALCULATING REQUIRED DIMENSIONS AND WEIR SETTING.

STEP 1: Collect the following data.

- Q in m^3/s
- Canal wide (b)
- Normal water depth at upstream Y_1
- Normal water depth at downstream Y_2
- Available drop between upstream & downstream of water surfaces ΔH
- Upstream canal invert elevation EL.A
- Downstream canal invert elevation EL.E

STEP 2: If $Q \leq 0.52$ then select the structure having the least weir lenght for Qmax which can be adapted to available drop from standard Dimension table, then read dimensions W, L, H, H' b_1, k, e & T: GOTO step3 otherwise: From general data table select the structure having the least weir lenght for Qmax which can be adapted to available drop then read W

STEP 3: From Rectangular weir table at apperdix A of publication No. 106 read the value of head (h) corresponding to the given Q

From the Anchor bolt & weir blade Data, read the value of G

STEP 4: $b_1 = 1.5\,W$

EL.B = EL.A + y_1 − 2h − h

EL.C = EL.B + 2h + G − .05

Not: if $2h < 0.30$m Then use $2h = 0.30$m

IF $Q \leq 0.52$ m/s then goto Step 7 otherwise

EL.D = EL.A + y_1 − (ΔH) − y_2 + 0.15

H = EL.C − EL.D

H' = 0.15 + y_2 + Structure freeboard

L = 3h + 2F

STEP 5: From the following table select the cutoff depth and then calculate Kmin

3h (m)	cut off depth (m)	cut off thickness (m)
0 – 0.90	0.60	0.15
90–1.80	0.75	0.20
> 1.80	0.90	0.20

K = Cut off depth − (EL.B − EL.D)

STEP 6: Calculate weighted creep lenght (W.C.L) by lane method

W.C.L = (EL.B − EL.D) + K + 2(K − 0.15) + (K − Protection thickness)

Calculate (ΔWS) for upstream water ponded to weir crest and downstream water at canal invert $\Delta WS = (EL.B + 2h) - (EL.D + .15)$ percolation factor = W.C.L / Δ WS

IF calculated percolation > recommended percolation factor GOTO Step 8, otherwise increase K and goto Step 6

STEP 7: EL.D = EL.C − H

t = 0.15 m

STEP 8: $T = b_1 + 3(2h + G - 0.05) + 2K$

STEP 9: Use Anchor Bolt and weir blade Data from the corresponding tables.

STANDARD DIMENSIONS for $Q \leq 0.56\ m^3/s$

STR Nº	W (m)	Qmax (m^3/s)	hmax (m)	ΔH for Qmax min	ΔH for Qmax max	L (m)	H (m)	H' (m)	b_1 (m)	k (m)	e (m)	T (m)
R 30	30	.0176	10	10		1.20	.75	60	.45	.45	.45	3.10
R 30A	30	.0176	10		90	2.10	1.50	60	.45	.45	.45	3.10
R 40	40	.0349	13	13		1.20	.85	65	.60	.45	.45	3.60
R 40 A	40	.0349	13		90	2.20	1.60	65	.60	.45	.45	3.60
R 50	50	.0595	.16	16		1.20	.90	70	.75	.45	.45	4.10
R 50A	50	.0595	16		90	2.30	1.65	70	.75	.45	.45	4.10
R 60	60	.0998	20	20		1.20	1.00	.75	.90	.45	.45	4.60
R 60A	60	.0998	20		90	2.40	1.70	.75	.90	.45	.60	4.60
R 70	70	.1435	23	.23		1.30	1.10	.80	1.05	.45	.60	5.00
R 70 A	70	.1435	23		.90	2.50	1.75	.80	1.05	.45	.60	5.00
R 80	80	.1972	.26	.26		1.45	1.15	.85	1.20	.45	.60	5.50
R 80 A	80	.1972	26		90	2.60	1.80	.85	1.20	.45	.60	5.50
R 90	90	.2749	30	30		1.60	1.25	90	1.35	.45	.60	6.00
R 90 A	90	.2749	30		90	2.70	1.85	90	1.35	.45	.60	6.00
R 100	1.00	.3524	33	.33		1.75	1.35	.95	1.50	.60	.60	6.60
R 100A	1.00	.3524	33		90	2.80	1.90	.95	1.50	.60	.60	6.60
R 120	1.20	.5644	40	40		2.00	1.50	1.05	1.80	.60	.60	7.50
R 120 A	1.20	.5644	40		90	3.00	2.00	1.05	1.80	.60	.60	7.50

GENERAL DATA for $Q > 0.56\ m^3/s$

STR Nº	W (m)	Qmax (m^3/s)	hmax (m)	ΔH for Qmax min	ΔH for Qmax max
R 140	1.40	.8120	46	46	
R 140 A	1.40	.8120	46		0.90
R 160	1.60	1.1477	53	53	
R 160 A	1.60	1.1477	53		0.90
R 180	1.80	1.5552	60	60	
R 180 A	1.80	1.5552	60		0.90
R 200	2.00	1.7280	60	60	
R 200A	2.00	1.7280	60		0.90
R 220	2.20	1.9008	60	60	
R 220 A	2.20	1.9008	60		0.90
R 240	2.40	2.0736	60	60	
R 240 A	2.40	2.0736	60		0.90
R 260	2.60	2.2464	60	60	
R 260A	2.60	2.2464	60		0.90
R 280	2.80	2.4192	60	60	
R 280 A	2.80	2.4192	60		0.90
R 300	3.00	2.5920	60	60	
R 300 A	3.00	2.5920	60		0.90

ANCHOR BOLT AND WEIR BLADE DATA for $Q \leq 0.56\ m^3/s$

STR Nº	W (m)	M (m)	G (m)	A (m)	B (m)	C (m)	D Nº @ (m)	E (m)	F (m)	Total Nº of hole
R 30 & R 30 A	30	.605	.45	.534	.20	.20	——	10	——	7
R 40 & R 40A	40	.730	50	.634	25	.25	——	15	——	7
R50 & R50A	50	.855	55	.734	25	.30	——	15	——	7
R60 & R60A	60	.980	60	.834	30	.20	1@.30	20	——	8
R70 & R70 A	70	1.080	60	.934	35	25	1@.30	.25	——	8
R80 & R80 A	80	1.205	65	1.034	35	25	2@.20	.25	——	9
R90 & R90A	90	1.330	70	1.134	40	.25	2@.25	.30	——	9
R100 & R100A	1.00	1.430	.70	1.234	.45	.30	2@.25	.35	——	9
R120 & R120A	1.20	1.840	.80	1.434	.50	.25	4@.20	.20	.20	13

ANCHOR BOLT AND WEIR BLADE DATA for $Q > 0.56\ m^3/s$

STR Nº	W (m)	M (m)	G (m)	A (m)	B (m)	C (m)	D Nº ② (m)	E (m)	F (m)	Total Nº of holes
R140 & R140 A	140	1.905	85	1.634	55	.35	4 ② .20	20	25	13
R160 & R160 A	1.60	2.130	90	1.834	65	.35	4 ② .25	25	30	13
R180 & R180 A	1.80	2.380	1.00	2.034	70	.35	4 ② .30	30	30	13
R200 & R200 A	2.00	2.580	1.00	2.234	70	.30	6 ② .25	30	30	15
R220 & R220 A	2.20	2.780	1.00	2.434	70	.25	6 ② .30	30	30	15
R240 & R240 A	2.40	2.980	1.00	2.634	70	.35	6 ② .30	30	30	15
R260 & R260A	2.60	3.180	1.00	2.934	70	.35	8 ② .25	30	30	17
R280 & R280A	2.80	3.380	1.00	3.034	70	.25	8 ② 30	30	30	17
R300 & R300A	3.00	3.580	1.00	3.234	70	.35	8 ② 30	30	30	17

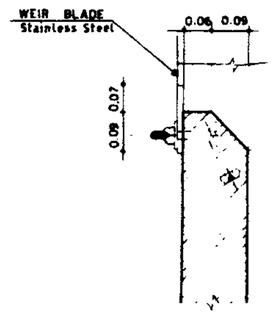

SECTION D–D
Scale 1:10

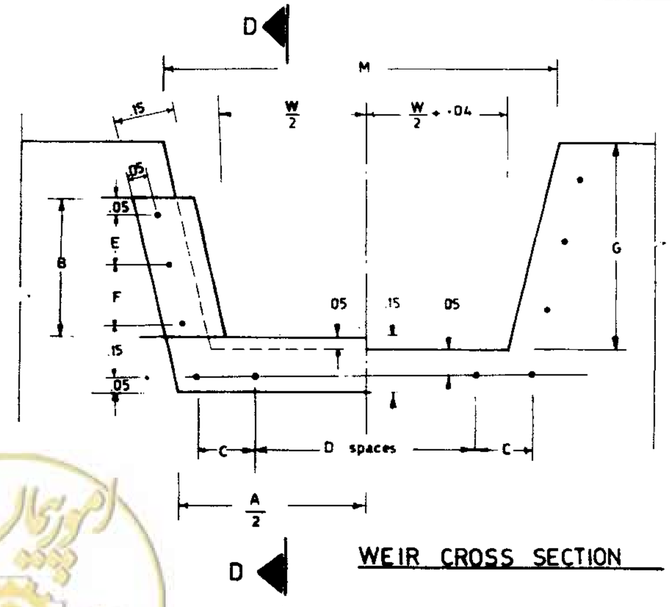

WEIR CROSS SECTION

NOTES:

1–Maximum allowable drop in water surface (ΔH) is 0.90 meter.

2–Minimum drop in water surface (ΔH) is equal to head (h), on the weir for designed discharge.

3–Dimension H has provided 0.30 meter freeboard over the hmax for Q max.

4–Dimension H' provides min 0.30 meter freeboard for the following assumed y_2 values

STR Nº	y_2 (m)
R 30 & R 30 A	0.15
R 40 & R 40 A	0.20
R 50 & R50A	0.25
R 60 & R 60A	0.30
R 70 & R 70A	0.35
R80 & R 80 A	0.40
R90 & R 90 A	0.45
R100 & R100A	0.50
R120 & R120A	0.60

Quantities: $Q \leq 0.56\ m^3/s$

	STR No.	30	30A	40	40A	50	50A	60	60A	70	70A	80	80A	90	90A	100	100A	120	120A
CIPOLLETTI WEIR	R/Bar kg	99.72	179.16	136.28	313.79	120.21	322.85	150.42	413.34	158.20	427.64	177.94	469.03	212.48	484.88	222.41	449.76	278.32	607.35
	Conc.	0.96	1.67	1.14	2.21	1.24	2.29	1.48	3.00	1.89	3.22	1.88	3.60	2.16	3.94	2.61	4.35	3.31	5.14
	Form	8.65	13.34	10.01	15.68	10.82	16.64	12.70	21.97	17.09	23.20	16.60	24.50	18.46	25.84	19.84	27.60	24.20	27.59

REFERENCE DWGS:

Scale:	IRRIGATION & DRAINAGE STANDARDS		
Data:	DWG Nº 15/2/2/02		CONTRACTED CIPOLLETTI WEIR (DIMENSION TABLES)
Approved:	Sheet Nº 3 of 6	Rev. Nº	

ISLAMIC REPUBLIC OF IRAN
MINISTRY OF PLAN & BUDJET
TECHNICAL RESEARCH AND STANDARD BUREAU

omoorepeyman.ir

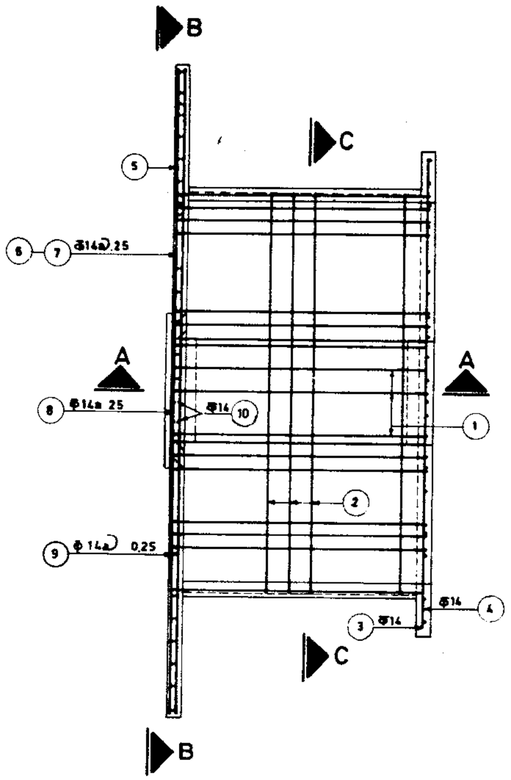

PLAN
Scale 1:50

H > 1.50

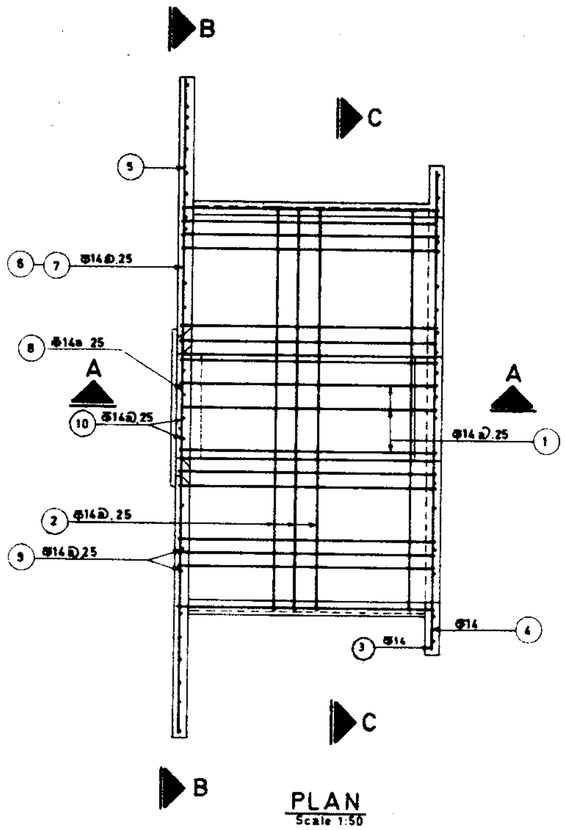

PLAN
Scale 1:50

H ≤ 1.50

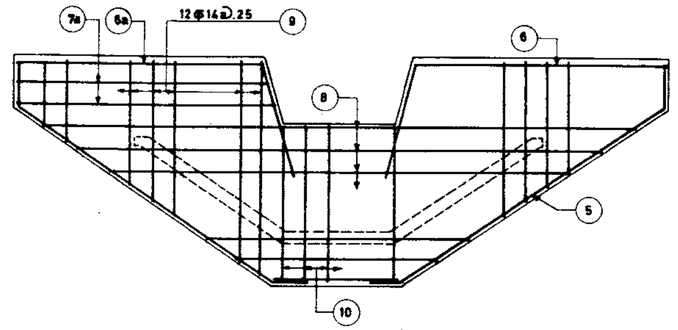

SECTION B_B
CIPOLLETTI WEIR Scale 1:50

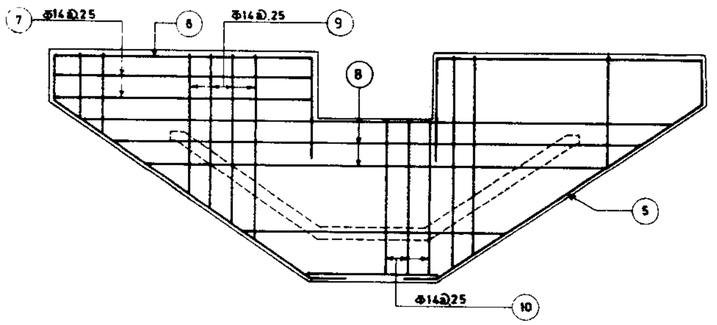

SECTION B_B
RECTANGULAR WEIR Scale 1:50

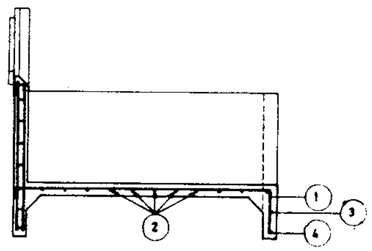

SECTION A_A
Scale 1:50

H > 1.50

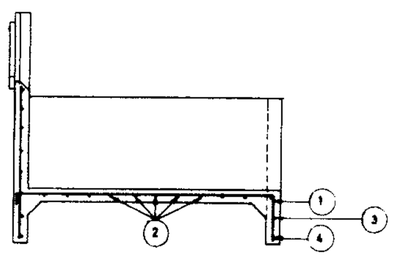

SECTION A_A
Scale 1:50

H ≤ 1.50

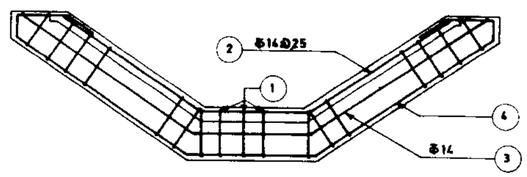

SECTION C_C
Scale 1:50

REFERENCE DWGS: For plan and section see dwg Nº 15/2/1/01
For list of reinforcement see dwg Nº 15/2/3/02 & 15/2/3/03

Scale 1:50	IRRIGATION & DRAINAGE STANDARDS		ISLAMIC REPUBLIC OF IRAN MINISTRY OF PLAN & BUDGET
Date:	DWG. Nº. 15/2/3/01	CONTRACTED CIPOLLETTI AND RECTANGULAR WEIR REINFORCEMENT PLAN & SECTION	TECHNICAL RESTARCH AND STANDARDS BUREAU
Approved:	Sheet Nº. 4 of 6 Rev. Nº		

omoorepeyman.ir

STR. 30

Pos.	Nº	FORM	UNIT LENG	TOTAL LENG
1	11	0.25 / 1.12 / 0.30	1.67	18.37
2	6	1.08 / 0.35 / 1.08	2.51	15.06
3	1	1.49 / 0.41 / 1.49	3.39	3.39
4	1	0.12 / 0.35 / 0.40 / 0.40 / 0.35 / 0.12 / 1.31 / 0.63 / 1.31	4.89	4.89
5	2	0.40 / 1.45	1.85	3.70
6	2	0.95 / 1.28	2.23	4.46
6a	2	0.95 / 1.15	2.10	4.20
7	4	0.98 ~ 1.28	1.13	4.52
7a	4	1.10 ~ 1.35	1.23	4.92
8	4	0.60 ~ 2.55	1.58	6.32
9	12	0.25 ~ 1.10	0.68	8.16
10	1	0.65	0.65	0.65
				69.52

69.52 x 1.21 = 84.12 kg

STR. 30A

Pos.	Nº	FORM	UNIT LENG	TOTAL LENG
1	11	0.25 / 2.02 / 0.30	2.57	28.27
2	10	1.08 / 0.35 / 1.08	2.51	25.10
3	1	1.49 / 0.41 / 1.49	3.39	3.39
4	1	0.12 / 0.35 / 0.40 / 0.40 / 0.35 / 0.12 / 1.31 / 0.53 / 1.31	4.89	4.89
5	2	0.40 / 1.45	1.85	3.70
6	2	0.95 / 1.28	2.23	4.46
6a	2	0.95 / 1.15	2.10	4.20
7	4	1.28	1.28	5.12
7a	4	1.35 ~ 1.40	1.38	5.52
8	7	0.60 ~ 3.00	1.80	12.60
9	12	1.00 ~ 1.85	1.43	17.16
10	1	1.40	1.40	1.40
				106.09

106.09 x 1.21 = 128.37 kg

STR. 40

Pos.	Nº	FORM	UNIT LENG	TOTAL LENG
1	13	0.25 / 1.12 / 0.30	1.67	21.71
2	6	1.18 / 0.45 / 1.18	2.81	16.86
3	1	1.56 / 0.51 / 1.56	3.63	3.63
4	1	0.12 / 0.35 / 0.40 / 0.40 / 0.35 / 0.12 / 1.40 / 0.63 / 1.40	5.17	5.17
5	2	0.40 / 1.70	2.10	4.20
6	2	0.95 / 1.48	2.43	4.86
6a	2	0.95 / 1.35	2.30	4.60
7	4	1.10 ~ 1.48	1.29	5.16
7a	4	1.22 ~ 1.55	1.39	5.55
8	4	0.70 ~ 2.80	1.75	7.00
9	14	0.22 ~ 1.20	0.71	9.94
10	1	0.70	0.70	0.70
				79.23

79.23 x 1.21 = 95.87 kg

STR. 40A

Pos.	Nº	FORM	UNIT LENG	TOTAL LENG
1	13	0.25 / 2.12 / 0.30	2.67	34.71
2	10	1.18 / 0.45 / 1.18	2.81	28.10
3	1	1.56 / 0.51 / 1.56	3.63	3.63
4	1	0.12 / 0.35 / 0.40 / 0.40 / 0.35 / 0.12 / 1.40 / 0.63 / 1.40	5.17	5.17
5	4	0.40 / 1.70	2.10	8.40
6	4	1.00 / 1.48	2.48	9.92
6a	4	0.95 / 1.35	2.30	4.60
7	8	1.48	1.48	11.84
7a	8	1.55 ~ 1.60	1.58	12.64
8	2x7	0.70 ~ 3.50	2.10	29.40
9	28	0.95 ~ 1.95	1.45	40.60
10	1	1.45	1.45	1.45
				173.22

173.22 x 1.21 = 209.60 kg

STR. 50

Pos.	Nº	FORM	UNIT LENG	TOTAL LENG
1	13	0.25 / 1.12 / 0.30	1.67	21.71
2	6	1.26 / 0.55 / 1.26	3.07	18.42
3	1	1.67 / 0.61 / 1.67	3.95	3.95
4	1	0.12 / 0.35 / 0.40 / 0.40 / 0.35 / 0.12 / 1.48 / 0.73 / 1.48	5.45	5.45
5	2	0.40 / 1.93	2.33	4.66
6	2	1.05 / 1.68	2.73	5.46
6a	2	0.95 / 1.55	2.50	5.00
7	6	0.75	1.22	7.32
7a	6	0.93 ~ 1.58	1.26	7.56
8	4	0.80 ~ 2.90	1.85	7.40
9	16	0.13 ~ 1.25	0.69	11.04
10	2	0.70	0.70	1.40
				86.81

86.81 x 1.21 = 105.04 kg

STR. 50 A

Pos.	Nº	FORM	UNIT LENG	TOTAL LENG
1	13	0.25 / 2.22 / 0.30	2.77	36.01
2	11	1.26 / 0.55 / 1.26	3.07	33.77
3	1	1.67 / 0.61 / 1.67	3.95	3.95
4	1	0.12 / 0.35 / 0.40 / 0.40 / 0.35 / 0.12 / 1.48 / 0.73 / 1.49	5.45	5.45
5	4	0.40 / 1.93	2.33	9.32
6	4	1.05 / 1.68	2.73	10.92
6a	4	0.95 / 1.55	2.50	10.00
7	12	1.68	1.68	20.16
7a	12	1.75 ~ 1.85	1.81	21.72
8	2x7	0.80 ~ 4.00	2.40	33.60
9	32	0.90 ~ 2.00	1.45	46.40
10	1	1.46	1.45	1.45
				201.03

201.03 x 1.21 = 243.25 kg

STR. 60

Pos.	Nº	FORM	UNIT LENG	TOTAL LENG
1	15	0.25 / 1.12 / 0.30	1.42	21.30
2	6	1.35 / 0.65 / 1.35	3.35	20.10
3	1	1.89 / 0.75 / 1.89	4.53	4.53
4	1	0.20 / 0.35 / 0.40 / 0.40 / 0.35 / 0.20 / 1.71 / 0.83 / 1.71	6.15	6.15
5	2	0.40 / 2.20	2.60	5.20
6	2	1.10 / 1.88	2.98	5.96
6a	2	0.95 / 1.70	2.65	5.30
7	6	0.90 ~ 1.88	1.39	8.34
7a	6	1.08 ~ 1.95	1.52	9.12
8	4	0.90 ~ 3.15	2.03	8.12
9	18	0.10 ~ 1.36	0.83	14.94
10	2	0.75	0.75	1.50
				96.14

96.14 x 1.21 = 116.33 kg

STR. 60A

Pos.	Nº	FORM	UNIT LENG	TOTAL LENG
1	15	0.25 / 2.32 / 0.45	3.02	45.30
2	11	1.35 / 0.65 / 1.35	3.35	36.85
3	1	1.89 / 0.75 / 1.89	4.53	4.53
4	1	0.20 / 0.50 / 0.40 / 0.40 / 0.50 / 0.20 / 1.71 / 0.90 / 1.71	6.52	6.52
5	4	0.40 / 2.20	2.60	10.40
6	4	1.10 / 1.88	2.98	11.92
6a	4	0.95 / 1.70	2.65	10.60
7	12	1.88	1.88	22.56
7a	12	1.95 ~ 2.06	2.01	24.12
8	2x7	0.90 ~ 4.50	2.70	37.80
9	36	0.80 ~ 2.05	1.43	51.48
10	1	1.45	1.45	1.45
				228.81

228.81 x 1.21 = 276.86 kg

STR. 70

Pos.	Nº	FORM	UNIT LENG	TOTAL LENG
1	16	0.25 / 1.22 / 0.45	1.92	30.72
2	6	1.44 / 0.75 / 1.44	3.63	21.78
3	1	1.98 / 0.85 / 1.98	4.81	4.81
4	1	0.20 / 0.50 / 0.40 / 0.40 / 0.50 / 0.20 / 1.80 / 1.0 / 1.80	6.80	6.80
5	2	0.40 / 2.37	2.77	5.54
6	2	1.15 / 2.00	3.15	6.30
6a	2	0.95 / 1.85	2.80	5.60
7	6	1.00 ~ 2.00	1.50	9.00
7a	6	1.18 ~ 2.07	1.63	9.78
8	4	1.00 ~ 3.55	2.28	9.12
9	18	0.10 ~ 1.45	0.78	14.04
10	3	0.85	0.85	2.55
				110.66

110.66 x 1.21 = 133.90 kg

NOTE:

1- Bar bending lists for both rectangular and cipolletti weirs are identical

2- Total weight only for position Nº 6,7 has been considered, if position 6a,7a is to be used required adjustment should be made accordingly

ALL BARS ARE Φ 14 (1.21 Kg/m)

REFERENCE DWGS: For reinforcement see dwg. Nº. 15/2/3/01

For bars with variable unit length see note under the same title at dwg. Nº 20/2/1/01

Scale.	IRRIGATION & DRAINAGE STANDARDS	
Date.	DWG Nº 15/2/3/02	CONTRACTED WEIRS LIST OF REINFORCEMENT STR 30 TO STR 70
Approved:	Sheet Nº 5 of 6 Rev. Nº	

ISLAMIC REPUBLIC OF IRAN
MINISTRY OF PLAN & BUDGET
TECHNICAL RESEARCH AND STANDARD BUREAU

omoorepeyman.ir

STR. 70 A

Pos.	Nº	FORM	UNIT LENG	TOTAL LENG
1	16	0.25 \ 2.42 / 0.45	3.12	49.92
2	11	1.44 \ 0.75 / 1.44	3.63	39.93
3	1	1.98 \ 0.85 / 1.98	4.81	4.81
4	1	0.20 0.50 0.40 0.40 0.50 0.20 / 1.80 1.00 1.80	6.80	6.80
5	4	0.40 — 2.37	2.77	11.08
6	4	1.15 \ 2.00	3.15	12.60
6a	4	0.95 \ 1.85	2.80	11.20
7	12	2.00	2.00	24.00
7a	12	2.07 ~ 2.18	2.13	25.56
8	2x7	1.00 ~ 4.90	2.95	41.30
9	40	0.75 ~ 2.10	1.43	57.20
10	2	1.50	1.50	3.00
				250.64

250.64 × 1.21 = 303.27 kg

STR. 80

Pos.	Nº	FORM	UNIT LENG	TOTAL LENG
1	16	0.25 \ 1.37 / 0.45	2.07	33.12
2	7	1.53 \ 0.85 / 1.53	3.91	27.37
3	1	2.10 \ 0.95 / 2.10	5.15	5.15
4	1	0.20 0.50 0.40 0.40 0.50 0.20 / 1.80 1.10 1.80	7.10	7.10
5	2	0.40 — 2.80	3.00	6.00
6	2	1.15 \ 2.28	3.43	6.86
6a	2	0.95 \ 2.05	3.00	6.00
7	6	1.15 ~ 2.28	1.72	10.29
7a	6	1.33 ~ 1.98	1.66	9.96
8	5	1.10 ~ 3.65	2.38	11.90
9	20	0.00 ~ 1.50	0.75	15.00
10	3	0.85	0.85	2.55
				125.34

125.34 × 1.21 = 151.66 kg

STR. 80A

Pos.	Nº	FORM	UNIT LENG	TOTAL LENG
1	16	0.25 \ 2.52 / 0.45	3.22	51.52
2	12	1.53 \ 0.85 / 1.53	3.91	46.92
3	1	2.10 \ 0.95 / 2.10	5.15	5.15
4	1	0.20 0.50 0.40 0.40 0.50 0.20 / 1.90 1.10 1.90	7.10	7.10
5	4	0.40 — 2.50	3.00	12.00
6	4	1.15 \ 2.28	3.43	13.72
6a	4	0.95 \ 2.05	3.00	12.00
7	12	2.28	2.28	27.36
7a	12	2.35 ~ 2.45	2.41	28.92
8	2x7	1.10 ~ 5.40	3.25	45.50
9	44	0.67 ~ 2.15	1.41	62.04
10	2	1.50	1.50	3.00
				274.31

274.31 × 1.21 = 331.92 kg

STR. 90

Pos.	Nº	FORM	UNIT LENG	TOTAL LENG
1	18	0.25 \ 1.52 / 0.45	2.22	39.96
2	7	1.62 \ 0.95 / 1.62	4.19	29.33
3	1	2.16 \ 1.05 / 2.16	5.37	5.37
4	1	0.20 0.50 0.40 0.40 0.50 0.20 / 1.98 1.20 1.98	7.36	7.36
5	2	0.40 — 2.85	3.25	6.50
6	2	1.20 \ 2.42	3.62	7.24
6a	2	0.95 \ 2.25	3.20	6.40
7	6	1.30 ~ 2.42	1.86	11.16
7a	6	1.48 ~ 2.12	1.80	10.80
8	5	1.20 ~ 3.90	2.55	12.75
9	22	0.00 ~ 1.60	0.80	17.60
10	4	0.90	0.90	3.60
				140.87

140.87 × 1.21 = 170.45 kg

STR. 90A

Pos.	Nº	FORM	UNIT LENG	TOTAL LENG
1	18	0.25 \ 2.62 / 0.45	3.32	59.76
2	12	1.62 \ 0.95 / 1.62	4.19	50.28
3	1	2.16 \ 1.05 / 2.16	5.37	5.37
4	1	0.20 0.50 0.40 0.40 0.50 0.20 / 1.98 1.20 1.98	7.36	7.36
5	4	0.40 — 2.85	3.25	13.00
6	4	1.20 \ 2.42	3.62	14.48
6a	4	0.95 \ 2.25	3.20	6.40
7	12	2.42	2.42	29.04
7a	12	2.50 ~ 2.60	2.55	30.60
8	2x7	1.20 ~ 5.70	3.45	48.30
9	44	0.60 ~ 2.20	1.40	61.60
10	3	1.50	1.50	4.50
				293.69

293.69 × 1.21 = 355.36 kg

STR. 100

Pos.	Nº	FORM	UNIT LENG	TOTAL LENG
1	19	0.25 \ 1.67 / 0.45	2.37	45.03
2	8	1.05	4.47	35.76
3	1	2.25 \ 1.15 / 2.25	5.65	5.65
4	1	0.20 0.50 0.40 0.40 0.50 0.20 / 2.07 1.30 2.07	7.64	7.64
5	2	0.40 — 3.08	3.48	6.96
6	2	1.20 \ 2.68	3.88	7.76
6a	2	0.95 \ 2.50	3.45	6.90
7	6	1.70 ~ 2.68	2.19	13.14
7a	6	1.88 ~ 2.53	2.21	13.26
8	6	1.40 ~ 4.85	3.13	18.78
9	24	0.10 ~ 1.85	0.98	23.52
10	4	1.15	1.15	4.60
				168.84

168.84 × 1.21 = 204.30 kg

STR. 100A

Pos.	Nº	FORM	UNIT LENG	TOTAL LENG
1	19	0.25 \ 2.72 / 0.45	3.42	64.98
2	13	1.71 \ 1.05 / 1.71	4.47	58.11
3	1	2.25 \ 1.15 / 2.25	5.65	5.65
4	4	0.20 0.50 0.40 0.40 0.50 0.20 / 2.07 1.30 2.07	7.64	30.56
5	4	0.40 — 3.08	3.48	13.92
6	4	1.20 \ 2.68	3.88	15.52
6a	4	0.95 \ 2.50	3.45	13.80
7	12	2.68	2.68	32.16
7a	12	2.75 ~ 2.86	2.81	33.72
8	2x8	1.40 ~ 6.50	3.95	63.20
9	46	0.85 ~ 2.40	1.53	73.44
10	3	1.70	1.70	5.10
				362.64

362.64 × 1.21 = 438.79 kg

STR. 120

Pos.	Nº	FORM	UNIT LENG	TOTAL LENG
1	21	0.25 \ 1.82 / 0.45	2.62	55.02
2	9	1.89 \ 1.25 / 1.89	5.03	45.27
3	1	2.43 \ 1.35 / 2.43	6.21	6.21
4	1	0.20 0.50 0.40 0.40 0.50 0.20 / 2.25 1.50 2.25	8.20	8.20
5	2	0.40 — 3.50	3.90	7.80
6	2	1.25 \ 3.08	4.33	8.66
6a	2	0.95 \ 2.75	3.70	7.40
7	6	2.00 ~ 3.08	2.54	15.24
7a	6	2.18 ~ 2.78	2.48	14.88
8	6	1.60 ~ 5.20	3.40	20.40
9	26	0.00 ~ 2.00	1.00	26.00
10	5	1.20	1.20	6.00
				198.80

198.80 × 1.21 = 240.55 kg

STR. 120A

Pos.	Nº	FORM	UNIT LENG	TOTAL LENG
1	21	0.25 \ 2.92 / 0.45	3.62	76.02
2	13	1.89 \ 1.25 / 1.89	5.03	65.39
3	1	2.43 \ 1.35 / 2.43	6.21	6.21
4	1	0.20 0.50 0.40 0.40 0.50 0.20 / 2.25 1.50 2.25	8.20	8.20
5	4	0.40 — 3.50	3.90	15.60
6	4	1.25 \ 3.08	4.33	17.32
6a	4	0.95 \ 2.75	3.70	14.80
7	12	3.08	3.08	36.96
7a	12	3.15 ~ 3.26	3.21	38.52
8	2x8	1.60 ~ 6.70	4.15	66.40
9	56	0.50 ~ 2.50	1.50	84.00
10	4	1.70	1.70	6.80
				382.90

382.90 × 1.21 = 463.31 kg

NOTE:

1- Bar bending lists for both rectangular and cipolletti weirs are identical

2- Total weight only for position No.6,7 has been considered, if position 6a,7a is to be used required adjustment should be made accordingly

ALL BARS ARE Ø 14 (1.21 Kg/m)

REFERENCE DWGS. For reinforcement see dwg. Nº. 15/2/3/01

For bars with variable unit length see note under the same title at dwg. Nº 20/2/1/01

Scale.	IRRIGATION & DRAINAGE STANDARDS	
Date.	DWG. Nº 15/2/3/03	CONTRACTED WEIRS LIST OF REINFORCEMENT STR 70A TO STR. 120A
Approved.	Sheet Nº 6 of 6 Rev. Nº	

ISLAMIC REPUBLIC OF IRAN
MINISTRY OF PLAN & BUDJET
TECHNICAL RESEARCH AND STANDARD BUREAU

@omoorepeymani

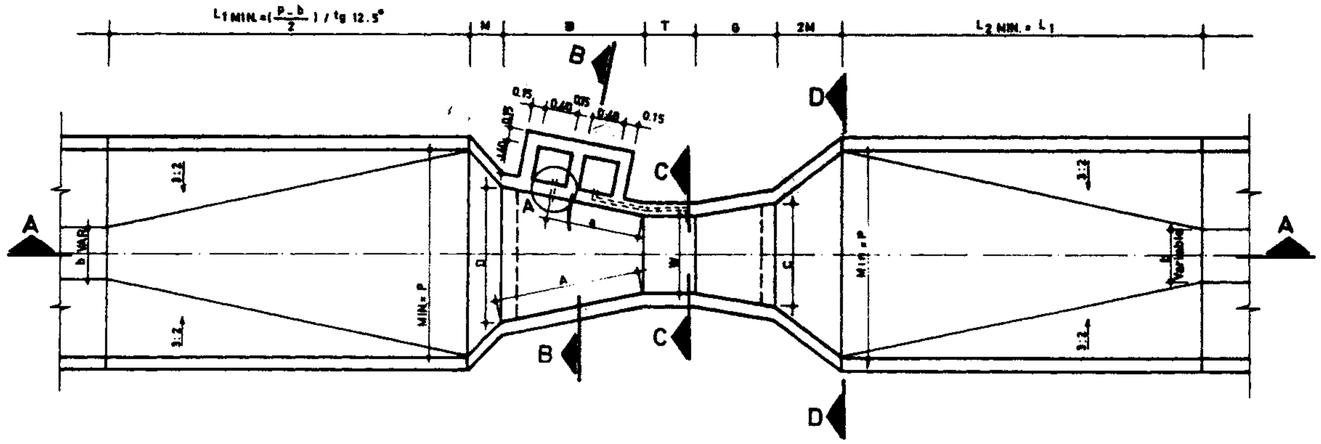

PLAN
Scale 1:50

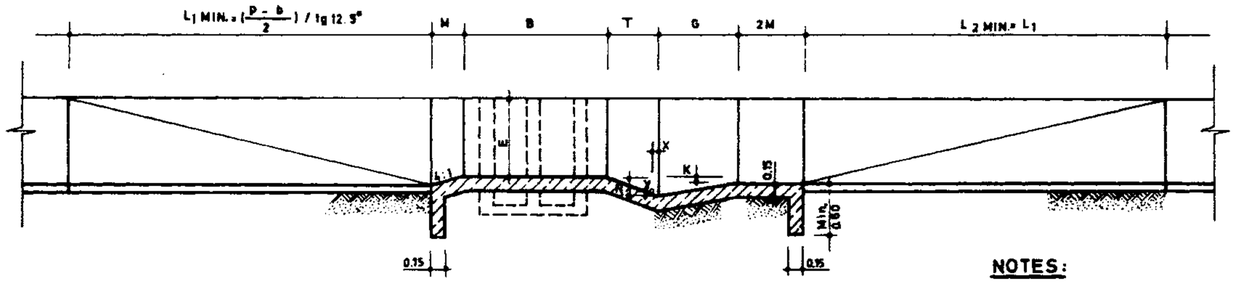

SECTION A-A
Scale 1:50

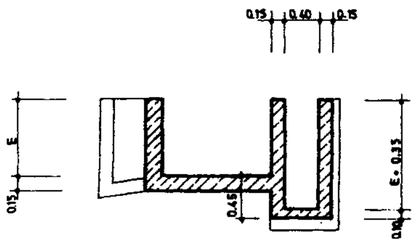

SECTION B-B
Scale 1:50

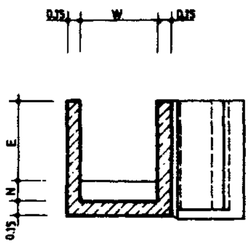

SECTION C-C
Scale 1:50

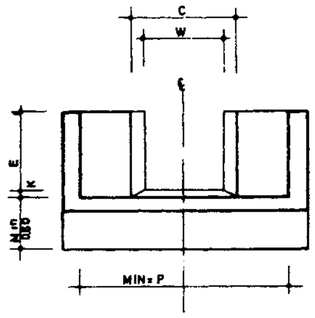

SECTION D-D
Scale 1:50

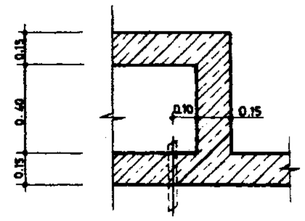

DETAIL „A"
Scale 1:20

NOTES:

1. For selecting a proper parshall flumes refer to PBO publication № 106 .
2. For hydralic properties and design example refer to PBO publication № 106 .
3. Parshall flums with a throat width less than one foot must be constructed with iron or other types of suitable metals.

STANDARD DIMENSION

W	A	a	B	C	D	E	T	G	K	M	N	P	X	Y	Z	H	R/Bar. kg.	Conc. m^3	Form m^2
1"= 25.4	363	242	356	93	167	229	76	203	19	—	29	—	8	13	3	206	—	—	—
2" 50.8	414	276	406	135	214	254	114	254	22	—	43	—	16	25	6	257	—	—	—
3"= 76.2	467	311	457	178	259	457	152	305	25	—	57	—	25	38	13	309	—	—	—
6"= 152.4	621	414	610	394	397	610	305	610	76	305	114	902	51	76	—	—	—	—	—
9"= 228.6	879	587	864	381	575	762	305	457	76	305	114	1080	51	76	—	—	—	—	—
1'= 304.8	1372	914	1343	610	845	914	610	914	76	381	229	1492	51	76	—	—	260.89	2.54	—
1.5'= 457.2	1448	965	1419	762	1026	914	610	914	76	381	229	1676	51	76	—	—	279.16	2.71	26.29
2'= 609.6	1524	1016	1495	914	1206	914	610	914	76	381	229	1854	51	76	—	—	287.47	2.84	28.10
3'= 914.4	1676	1118	1645	1219	1572	914	610	914	76	381	229	2222	51	76	—	—	321.15	3.19	29.23
4'= 1219.2	1829	1219	1794	1524	1937	914	610	914	76	457	229	2711	51	76	—	—	366.34	3.69	31.79
5'= 1524.0	1981	1321	1943	1829	2302	914	610	914	76	457	229	3080	51	76	—	—	359.14	4.15	33.73
6'= 1828.8	2134	1422	2092	2134	2667	914	610	914	76	457	229	3442	51	76	—	—	428.59	4.53	34.73
7'= 2133.6	2286	1524	2242	2438	3032	914	610	914	76	457	229	3810	51	76	—	—	467.77	4.93	36.17
8'=2438.4	2438	1626	2391	2743	3397	914	610	914	76	457	229	4172	51	76	—	—	500.23	5.3[illegible]	37.71

ALL DIMENSIONS ARE IN mm

REFFRENCE DWGS : For reinforcement see dwg. N°. 15/1/3/01
For general notes see dwgs. № 20/2/1/01 TO 20/2/1/03

Scale: 1:50	IRRIGATION & DRAINAGE STANDARDS	
Date:	DWG. N°. 15/1/1/01	PARSHALL FLUMES PLAN & SECTIONS
Approved:	Sheet N°. 1 of 3 Rev. N°.	

ISLAMIC REPUBLIC OF IRAN
MINISTRY OF PLAN & BUDJET
TECNICAL RESEARCH AND STANDARD BUREAU

@omoorepeyman.ir

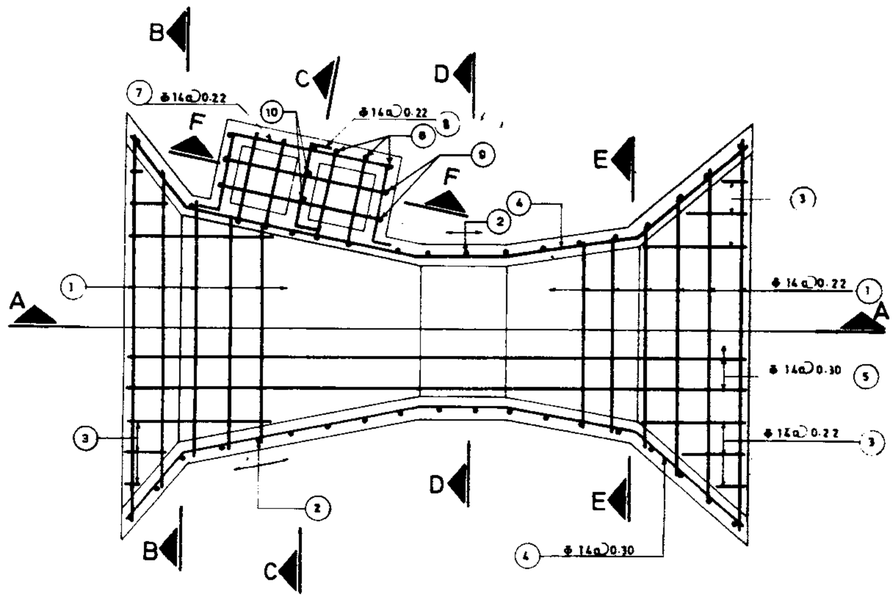

PLAN

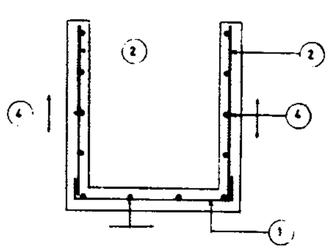

SECTION D_D

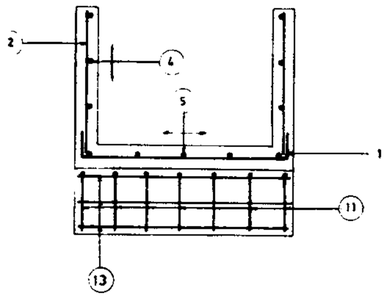

SECTION E_E

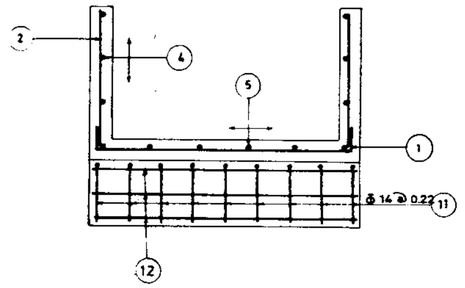

SECTION B_B

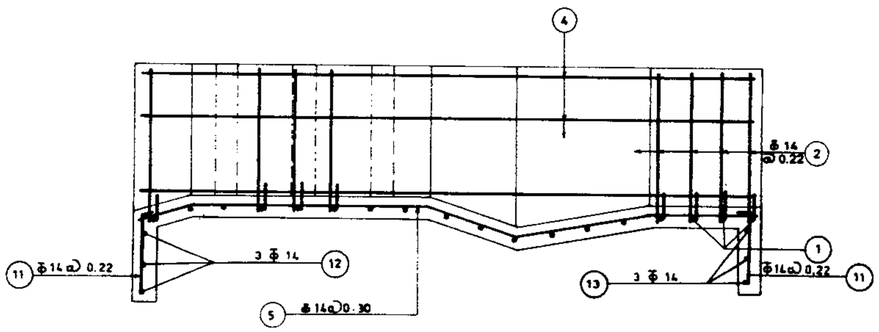

SECTION A_A

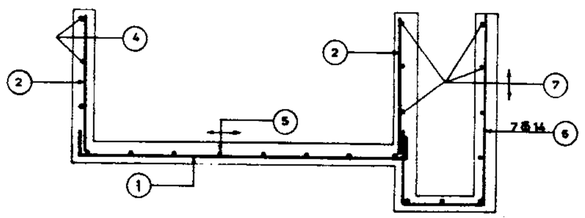

SECTION C_C

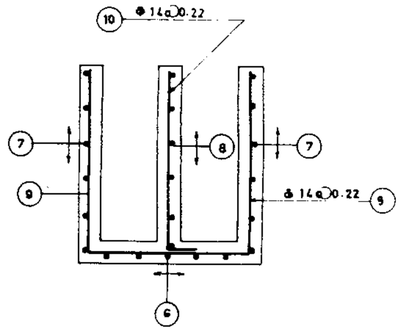

SECTION F_F

REFERENCE DWGS: For reinforcement tables see dwg. Nº. 15/1/3/02

Scale: 1:30	IRRIGATION & DRAINAGE STANDARDS		ISLAMIC REPUBLIC OF IRAN MINISTRY OF PLAN & BUDJET TECHNICAL RESEARCH AND STANDARD BUREAU
Date:	DWG. Nº 15/1/3/01	PARSHALL FLUMES_REINFORCEMENT	
Approved:	Sheet Nº. 2 of 3	Rev. Nº	

omoorepeyman.ir

W=1´

Pos.	Nº	FORM	UNIT LENG.	TOTAL LENG.
1	19	0.50 — 0.53 ~ 1.71 — 0.50	2.12	40.28
2	2x19	0.98 ~ 1.21	1.10	41.80
3	12	0.20 ~ 1.21	0.71	8.52
4	10	0.47 — 1.37 — 0.84 — 0.61 — 0.88	4.17	41.70
5	4	0.34 — 1.34 — 0.65 — 0.76 — 0.84	3.93	15.72
6	7	0.55 — 0.55 — 1.27	2.37	16.59
7	7	0.20 — 0.55 — 1.10 — 0.55 — 0.20	2.60	18.20
8	7	0.20 — 0.55 — 0.20	0.95	6.65
9	2	1.27 — 1.10 — 1.27	3.64	7.28
10	2	1.27 — 0.20	1.47	2.94
11	8	0.49 — 0.20	0.69	5.52
12	3	1.00	1.00	3.00
13	3	0.76	0.76	2.28
				210.48

210.48 x 1.21 = 254.68 Kg

W=1.5´

Pos.	Nº	FORM	UNIT LENG.	TOTAL LENG.
1	20	0.50 — 0.68 ~ 1.90 — 0.50	2.29	45.80
2	2x20	0.98 ~ 1.21	1.10	44.00
3	12	0.20 ~ 1.21	0.71	8.52
4	10	0.45 — 1.45 — 0.84 — 0.61 — 0.88	4.24	42.40
5	5	0.34 — 1.42 — 0.65 — 0.76 — 0.84	4.01	20.05
6	7	0.55 — 0.55 — 1.27	2.37	16.59
7	7	0.20 — 0.55 — 1.10 — 0.55 — 0.20	2.60	18.20
8	7	0.20 — 0.55 — 0.20	0.95	6.65
9	2	1.27 — 1.10 — 1.27	3.64	7.28
10	2	1.27 — 0.20	1.47	2.94
11	9	0.49 — 0.20	0.69	6.21
12	3	1.18	1.18	3.54
13	3	0.91	0.91	2.73
				224.91

224.91 x 1.21 = 272.14 Kg

W=2´

Pos.	Nº	FORM	UNIT LENG.	TOTAL LENG.
1	20	0.50 — 0.83 ~ 2.07 — 0.50	2.45	49.00
2	2x20	0.98 ~ 1.21	1.10	44.00
3	12	0.20 ~ 1.21	0.71	8.52
4	10	0.45 — 1.52 — 0.84 — 0.61 — 0.88	4.31	43.10
5	5	0.34 — 1.50 — 0.65 — 0.76 — 0.84	4.09	20.45
6	7	0.55 — 0.55 — 1.27	2.37	16.59
7	7	0.20 — 0.55 — 1.10 — 0.55 — 0.20	2.60	18.20
8	7	0.20 — 0.55 — 0.20	0.95	6.65
9	2	1.27 — 1.10 — 1.27	3.64	7.28
10	2	1.27 — 0.20	1.47	2.94
11	11	0.49 — 0.20	0.69	7.59
12	3	1.36	1.36	4.08
13	3	1.06	1.06	3.18
				231.58

231.58 x 1.21 = 280.21 Kg

W=3´

Pos.	Nº	FORM	UNIT LENG.	TOTAL LENG.
1	21	0.50 — 1.14 ~ 2.44 — 0.50	2.79	58.59
2	2x21	0.98 ~ 1.21	1.10	46.20
3	12	0.20 ~ 1.21	0.71	8.52
4	10	0.45 — 1.68 — 0.84 — 0.61 — 0.97	4.49	44.90
5	7	0.34 — 1.85 — 0.65 — 0.76 — 0.84	4.24	29.68
6	7	0.55 — 0.55 — 1.27	2.37	16.59
7	7	0.20 — 0.55 — 1.10 — 0.55 — 0.20	2.60	18.20
8	7	0.20 — 0.55 — 0.20	0.95	6.65
9	2	1.27 — 1.10 — 1.27	3.64	7.28
10	2	1.27 — 0.20	1.47	2.94
11	14	0.49 — 0.20	0.69	9.66
12	3	1.72	1.72	5.16
13	3	1.37	1.37	4.11
				258.48

258.48 x 1.21 = 312.76 Kg

W=4´

Pos.	Nº	FORM	UNIT LENG.	TOTAL LENG.
1	23	0.50 — 1.45 ~ 2.93 — 0.50	3.19	73.37
2	2x23	0.98 ~ 1.21	1.10	50.60
3	12	0.20 ~ 1.37	0.79	9.48
4	10	0.56 — 1.83 — 0.84 — 0.61 — 1.10	4.94	49.40
5	8	0.42 — 1.79 — 0.65 — 0.92 — 0.84	4.62	36.96
6	7	0.55 — 0.55 — 1.27	2.37	16.59
7	7	0.20 — 0.55 — 1.10 — 0.55 — 0.20	2.60	18.20
8	7	0.20 — 0.55 — 0.20	0.95	6.65
9	2	1.27 — 1.10 — 1.27	3.64	7.28
10	2	1.27 — 0.20	1.47	2.94
11	17	0.49 — 0.20	0.69	11.73
12	3	2.09	2.09	6.27
13	3	1.67	1.67	5.01
				294.48

294.48 x 1.21 = 356.32 Kg

W=5´

Pos.	Nº	FORM	UNIT LENG.	TOTAL LENG.
1	23	0.50 — 1.74 ~ 3.30 — 0.50	3.52	80.96
2	2x23	0.98 ~ 1.21	1.10	50.60
3	12	0.20 ~ 1.37	0.79	9.48
4	10	0.56 — 1.98 — 0.84 — 1.10 — 0.61	5.10	51.00
5	10	0.42 — 1.94 — 0.65 — 0.92 — 0.84	4.77	47.70
6	7	0.55 — 0.55 — 1.27	2.37	16.59
7	7	0.20 — 0.55 — 1.10 — 0.55 — 0.20	2.60	18.20
8	7	0.20 — 0.55 — 0.20	0.95	6.65
9	2	1.27 — 1.10 — 1.27	3.64	7.28
10	2	1.27 — 0.20	1.47	2.94
11	20	0.49 — 0.20	0.69	13.80
12	3	2.45	2.45	7.35
13	3	1.98	1.98	5.94
				317.59

317.59 x 1.21 = 384.28Kg

W=6´

Pos.	Nº	FORM	UNIT LENG.	TOTAL LENG.
1	24	0.50 — 2.04 ~ 3.68 — 0.50	3.85	92.40
2	2x24	0.98 ~ 1.21	1.10	52.80
3	12	0.20 ~ 1.37	0.79	9.48
4	10	0.56 — 2.13 — 0.84 — 0.61 — 1.13	5.27	52.70
5	11	0.42 — 2.09 — 0.65 — 0.92 — 0.84	4.88	53.68
6	7	0.55 — 0.55 — 1.27	2.37	16.59
7	7	0.20 — 0.55 — 1.10 — 0.55 — 0.20	2.60	18.20
8	7	0.20 — 0.55 — 0.20	0.95	6.65
9	2	1.27 — 1.10 — 1.27	3.64	7.28
10	2	1.27 — 0.20	1.47	2.94
11	23	0.49 — 0.20	0.69	15.87
12	3	2.82	2.82	8.46
13	3	2.28	2.28	6.84
				343.89

343.89 x 1.21 = 416.11Kg

W=7´

Pos.	Nº	FORM	UNIT LENG.	TOTAL LENG.
1	25	0.50 — 2.35 ~ 4.03 — 0.50	4.19	104.75
2	2x25	0.98 ~ 1.21	1.10	55.00
3	16	0.20 ~ 1.37	0.79	12.64
4	10	0.56 — 2.29 — 0.91 — 0.61 — 1.15	5.52	55.20
5	12	0.42 — 2.24 — 0.65 — 0.92 — 0.84	5.07	60.84
6	7	0.55 — 0.55 — 1.27	2.37	16.59
7	7	0.20 — 0.55 — 1.10 — 0.55 — 0.20	2.60	18.20
8	7	0.20 — 0.55 — 0.20	0.95	6.65
9	2	1.27 — 1.10 — 1.27	3.64	7.28
10	2	1.27 — 0.20	1.47	2.94
11	26	0.49 — 0.20	0.69	17.94
12	3	3.18	3.18	9.54
13	3	2.59	2.59	7.77
				375.34

375.34 x 1.21 = 454.16 Kg

W=8´

Pos.	Nº	FORM	UNIT LENG.	TOTAL LENG.
1	25	0.50 — 2.67 ~ 4.39 — 0.50	4.53	113.25
2	2x25	0.98 ~ 1.21	1.10	55.00
3	16	0.20 ~ 1.37	0.79	12.64
4	10	0.56 — 2.44 ~ 0.84 — 0.61 — 1.17	5.62	56.20
5	14	0.42 — 2.39 — 0.65 — 0.92 — 0.84	5.22	73.08
6	7	0.55 — 0.55 — 1.27	2.37	16.59
7	7	0.20 — 0.55 — 1.10 — 0.55 — 0.20	2.60	18.20
8	7	0.20 — 0.55 — 0.20	0.95	6.65
9	2	1.27 — 1.10 — 1.27	3.64	7.28
10	2	1.27 — 0.20	1.47	2.94
11	29	0.49 — 0.20	0.69	20.01
12	3	3.55	3.55	10.65
13	3	2.89	2.89	8.67
				401.16

401.16 x 1.21 = 485.40Kg

ALL BARS ARE Φ 14 (1.21 Kg/m)

REFERENCE DWGS: For reinforcement see dwg. Nº 15/1/3/01
For bars with various unit length see note under the same title at dwg. Nº 20/2/1/01

Scale:	IRRIGATION & DRAINAGE STANDARDS		
Date	DWG. Nº 15/1/3/02		PARSHALL FLUMES_REINFORCEMENT
Approved:	Sheet Nº 3 of 3	Rev. Nº	TABLES STR.1 TO 9

ISLAMIC REPUBLIC OF IRAN
MINISTRY OF PLAN & BUDJET
TECHNICAL RESEARCH AND STANDARD BUREAU

omoorepeyman.ir

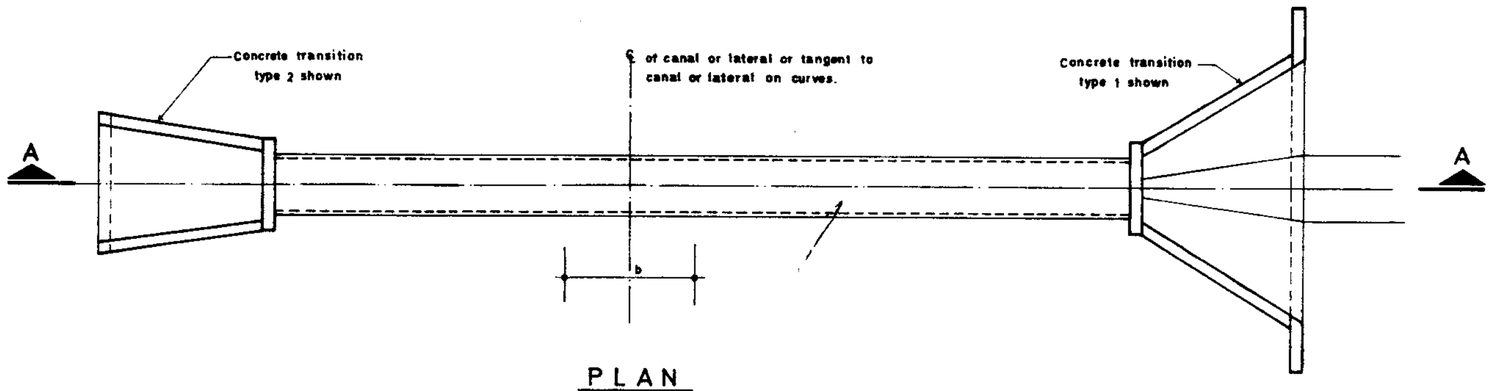

PLAN

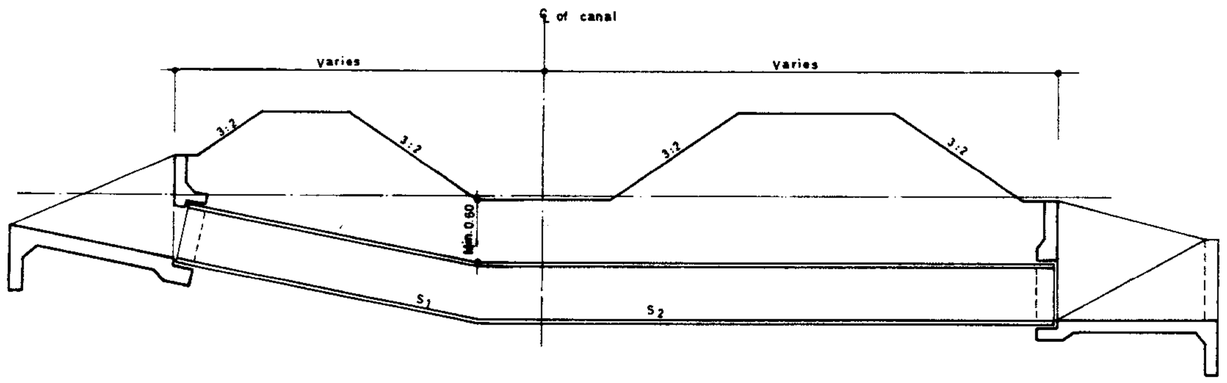

SECTION A-A

NOTES

(1) Culvert, as discussed in this publication, carries storm runoff or drainage water, under the canal.

(2) Precast concrete pipe is the usual choice for culverts under canals.

(3) Where the conduit is on a uniform grade it has been found satisfactory to use a minimum slope of 0.005 and a maximum slope, slightly steeper than the critical slope.

(4) Where a uniform slope would greatly exceed the critical slope, requring an energy dissipator, it is usually preferable to include a vertical bend and two invert slopes, S_1 and S_2 the upstream slope, S_1, should be much steeper than critical and the downstream slope S_2 is usually set on the flat slope of 0.005 to facilitate dissipation of excess energy by a hydraulic jump in the pipe.

(5) Type 1, 2, 3 and 4 of transitions (Dwgs. Nº. 13/6/1/01, 13/7/1/01, 13/8/1/01, 13/9/1/01) are used as culvert inlets. The best choice for any particular situations is dependent upon the hydraulics the topographic character of the site, and the relative elevations of the canal and drainage.

(6) The culvert outlet performs the basic function of releasing water to outlet channel without excessive erosion. Excess energy may be dissipate by a concrete transition, baffled outlet (Dwg Nº. 16/1/1/01) baffled apron drop (Dwg Nº. 16/2/2/01). The type 1 and 2 of concrete outlet transitions are used at culvert outlets.

(7) Generally, culverts are sized on the basis of storm runoff for a 25 year flood frequency.

(8) The culvert should be designed for a maximum full pipe velocity of:

- 3 m^3/sec if a concrete transition is used at the outlet.
- 3.5 m^3/sec if an energy dissipator is used.

(9) For pipe flowing full the pipe diameter is determined from the equation $Q = A.V.$ or $D = 1.13\sqrt{\frac{Q}{V}}$

(10) The minimum diameter usually permitted for pipe culvert is 60 cm.

(11) The upstream water surface will be controlled by the head:

a- Inlet control: That is when the upstream water surface is not influenced by flow conditions downstream from the inlet.

b- Outlet control: That is when upstream water surface is influenced by downstream conditions.

(12) The need for energy dissipation structures at culvert outlets should be avoided if possible, but if the exit velocity in the pipe exceeds 6.0 m/s, some kind of energy dissipator such as baffled outlet, drops, chuts, etc. should be provided.

(13) Standard outlet protection is used if the pipe velocity at the outlet is equal to or less than 5 m/sec and the next higher class of protection is required if the pipe velocity at the outlet is greater than 5 m/sec.

REFERENCE DWGS: For pipe connection to structure see dwg Nº 17/1/1/01 TO 17/1/1/03
For general notes see dwg Nº 20/2/1/01 TO 20/2/1/03

Scale: N.T.S	IRRIGATION & DRAINAGE STANDARDS	
Date:	DWG.Nº. 14/2/1/01	CULVERT PLAN & SECTION
Approved:	Sheet Nº 1 of 1 | Rev. Nº.	

ISLAMIC REPUBLIC OF IRAN
PLAN & BUDJET ORGANIZATION
TECNICAL RESEARCH AND STANDARD BUREAU

omoorepeyman.ir

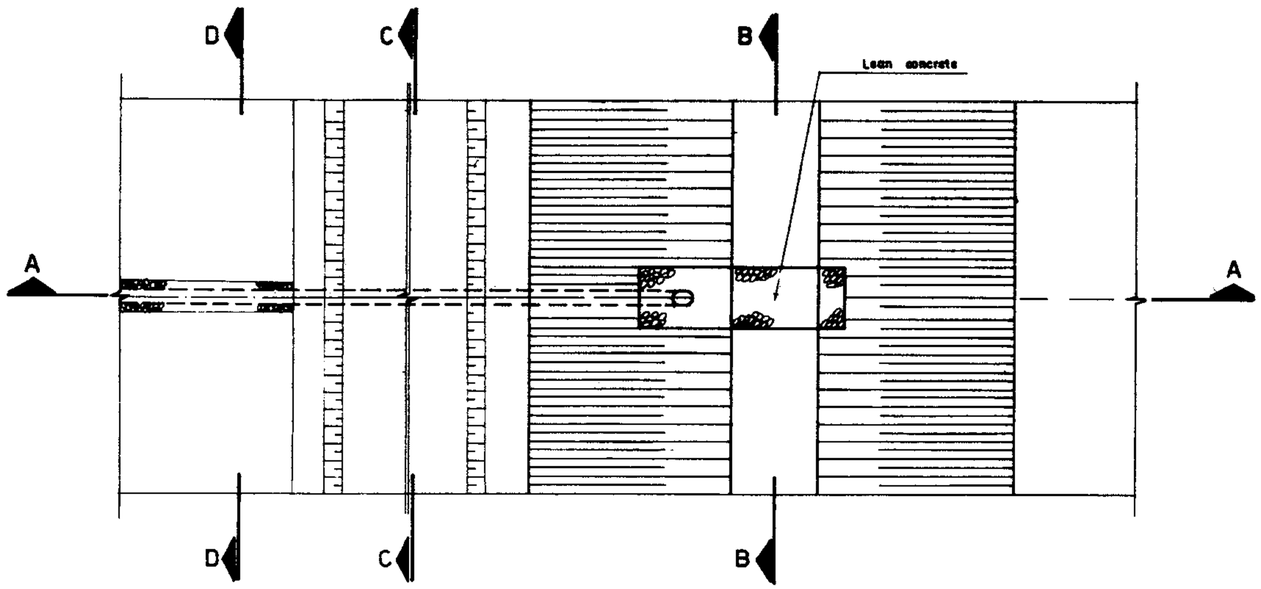

PLAN

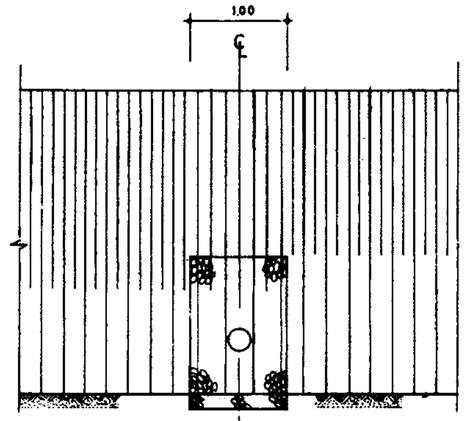

SECTION B-B

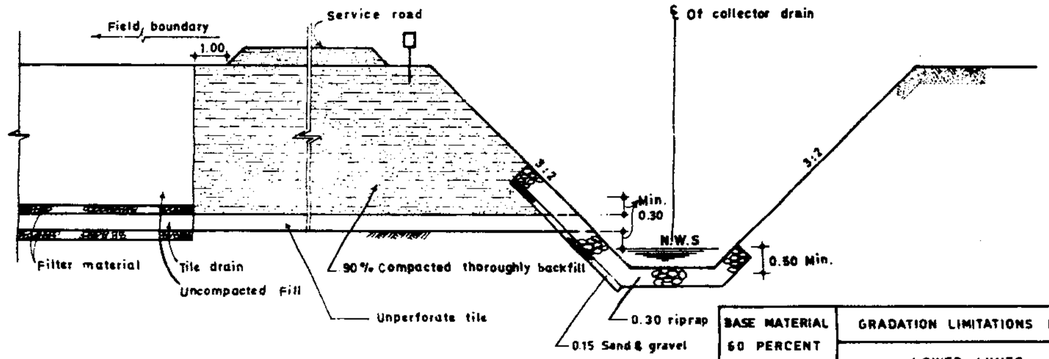

SECTION A-A

BASE MATERIAL 60 PERCENT PASSING (diameter of particles, mm)	GRADATION LIMITATIONS FOR ENVELOPE (diameter of particles, mm)											
	LOWER LIMITS, PERCENT PASSING						UPPER LIMITS, PERCENT PASSING					
	100	60	30	10	5	0	100	60	30	10	5	0
0.02—0.05	9.52	2.0	0.81	0.33	0.3	0.074	38.1	10.0	8.7	2.5	—	0.59
0.05—0.10	"	3.0	1.07	0.38	"	"	"	12.0	10.4	3.0	—	"
0.10—0.25	"	4.0	1.30	0.40	"	"	"	15.0	13.1	3.8	—	"
0.25—1.00	"	5.0	1.45	0.42	"	"	"	20.0	17.3	5.0	—	"

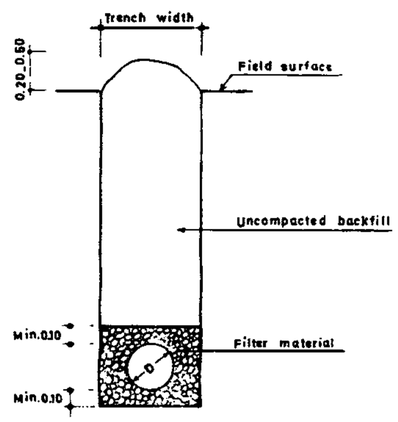

SECTION D-D

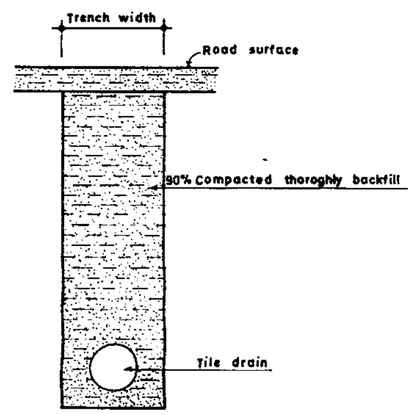

SECTION C-C

REFERENCE DWGS:

Scale: N.T.S	IRRIGATION & DRAINAGE STANDARDS	
Date:	DWG. Nº. 14/3/1/01	TILE DRAIN OUTLET
Approved:	Sheet Nº 1 of 1 Rev. Nº.	

ISLAMIC REPUBLIC OF IRAN
PLAN & BUDJET ORGANIZATION
TECNICAL RESEARCH AND
STANDARD BUREAU

omoorepeyman.ir

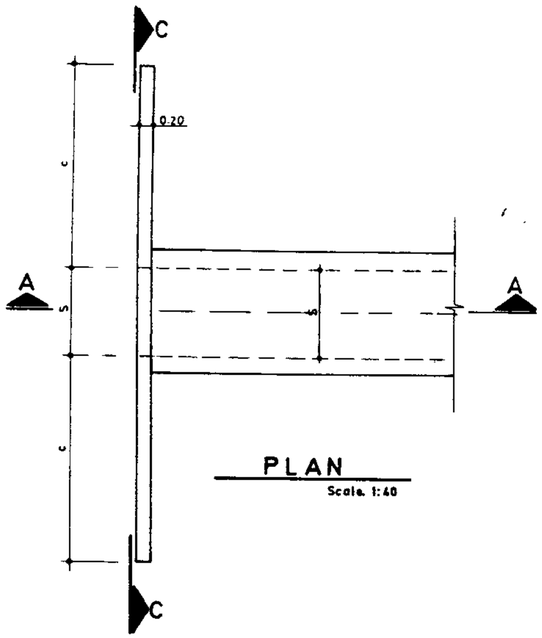

PLAN
Scale. 1:40

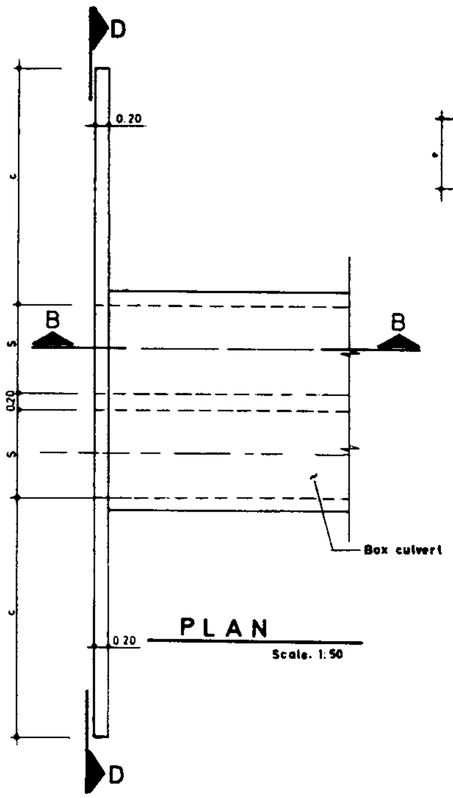

PLAN
Scale. 1:50

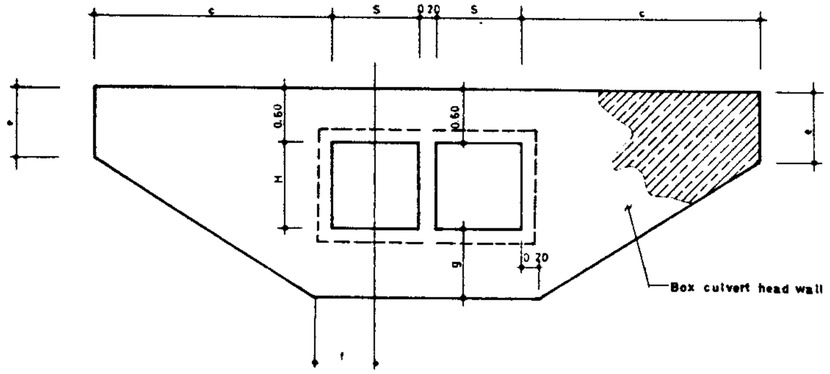

SECTION D-D
Scale. 1:50

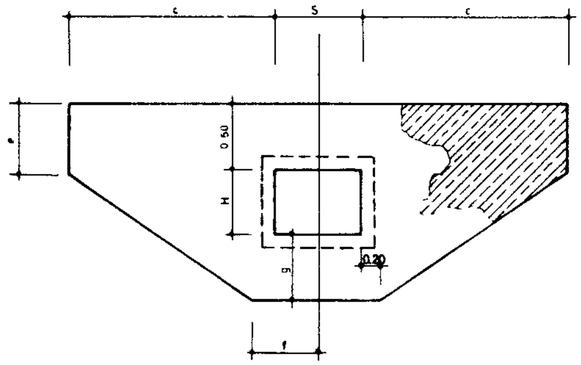

SECTION C-C
Scale. 1:40

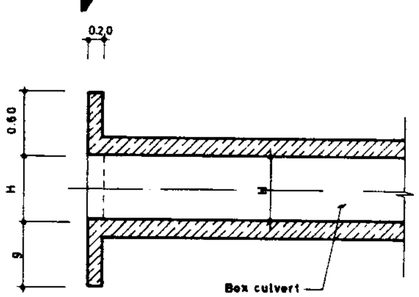

SECTION A-A
Straight Scale. 1:40

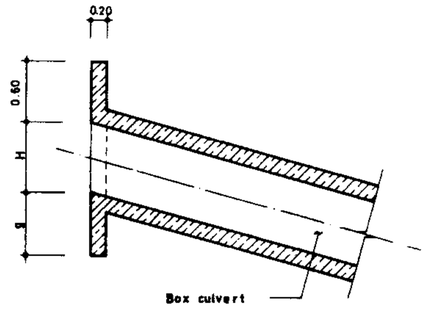

SECTION A´-A´
Sloped Scale. 1:40

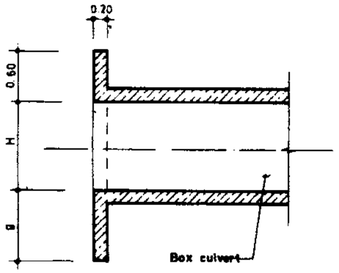

SECTION B-B
Straight Scale. 1:50

NOTES:

① Headwalls could be used at the culvert ends under compacted fill in lieu to inlet and outlet transitions.

② "H" designated as height of opening is equal to height of bax culvert.

③ "S" designated as span of opening is equal to defined as span of box culvert.

SINGLE BOX HEADWALL DIMENSION TABLE

H	S	c	g	e	f	R/Bar. Kg	Conc m^3	FORM m^2
0.60	0.80	1.95	0.60	0.55	0.60	136.15	1.19	13.28
0.80	0.80	2.30	0.80	0.80	0.60	185.13	1.66	18.52
0.80	1.00	2.30	0.80	0.80	0.70	188.52	1.72	18.84
0.80	1.50	2.30	0.80	0.80	0.95	207.73	1.86	20.32
1.00	1.00	2.60	0.80	0.80	0.70	219.35	2.01	21.88
1.00	1.50	2.60	0.80	0.80	0.95	238.56	2.15	23.38
1.00	2.00	2.75	1.00	0.90	1.20	296.45	2.63	28.48
1.50	1.50	3.35	1.00	1.00	0.95	338.97	3.31	35.61
1.50	2.00	3.35	1.00	1.00	1.20	360.36	3.47	37.36
1.75	2.00	3.70	1.00	1.00	1.20	403.44	3.95	42.36
2.00	2.00	3.80	1.00	1.20	1.20	437.75	4.38	47.04
2.00	2.50	4.10	1.20	1.20	1.45	501.93	5.10	54.52

DOUBLE BOX HEADWALL DIMENSION TABLE

H	S	c	g	e	f	R/Bar Kg.	Conc m^3	FORM m^2
1.00	1.00	2.60	0.80	0.80	0.70	266.93	2.38	25.84
1.00	1.50	2.60	0.80	0.80	0.95	305.48	2.66	28.84
1.00	2.00	2.60	1.00	1.00	1.20	379.29	3.32	35.84
1.50	1.50	3.35	1.00	1.00	0.95	415.68	3.92	42.10
1.50	2.00	3.35	1.00	1.00	1.20	446.76	4.24	45.60
1.50	2.50	3.35	1.20	1.20	1.45	528.12	5.03	54.10
2.00	2.00	4.10	1.20	1.20	1.20	575.74	5.80	62.04
2.00	2.50	4.10	1.20	1.20	1.45	629.18	6.16	66.04

REFERENCE DWGS: For head wall reinforcement see dwg. N°: 14/1/3/01
For general notes see dwg. N° 20/2/1/01 TO 20/2/1/03

Scale: 1:40_1:50	IRRIGATION & DRAINAGE STANDARDS		ISLAMIC REPUBLIC OF IRAN MINISTRY OF PLAN & BUDJET TECHNICAL RESEARCH AND STANDARD BUREAU
Date:	DWG. N° 14/1/1/01	TYPICAL HEADWALL FOR BOX CULVERTS PLAN & SECTION	
Approved:	Sheet. N° 1 of 9 Rev. N°		

omoorepeyman.ir

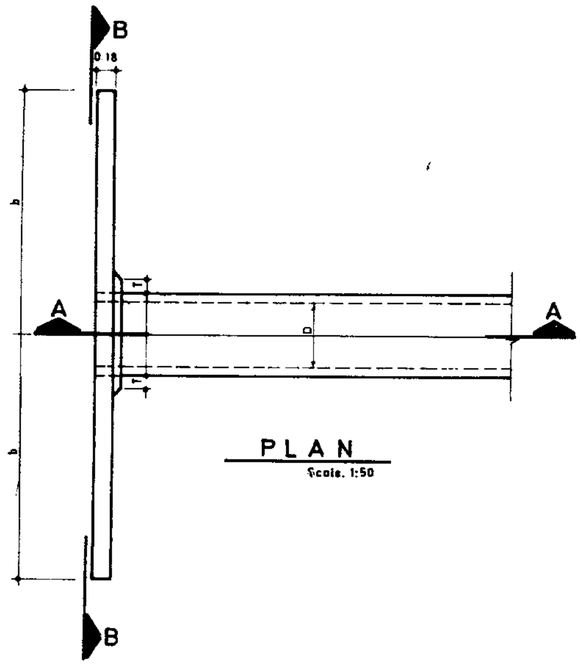

PLAN
Scale. 1:50

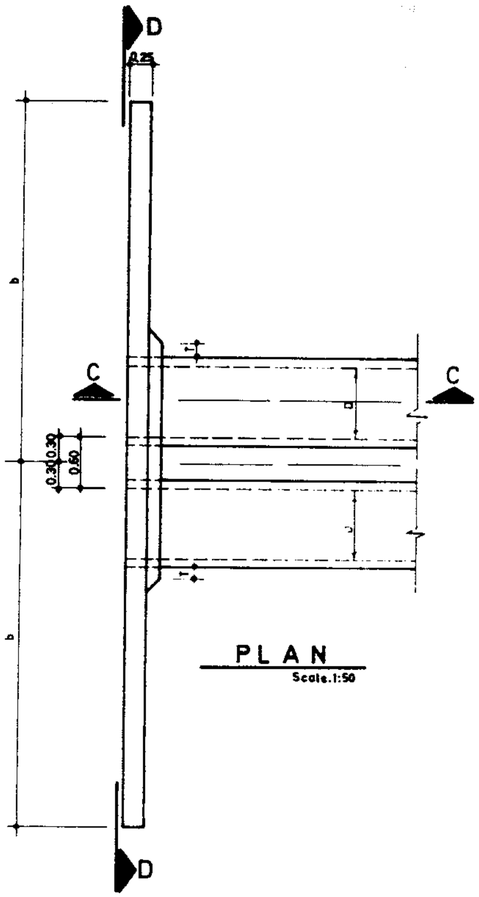

PLAN
Scale. 1:50

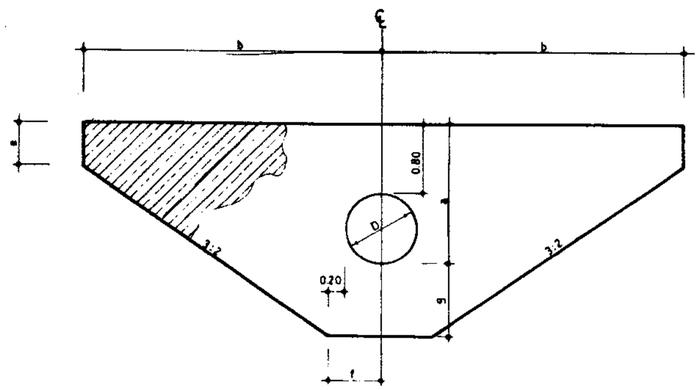

SECTION B-B
Scale. 1:50

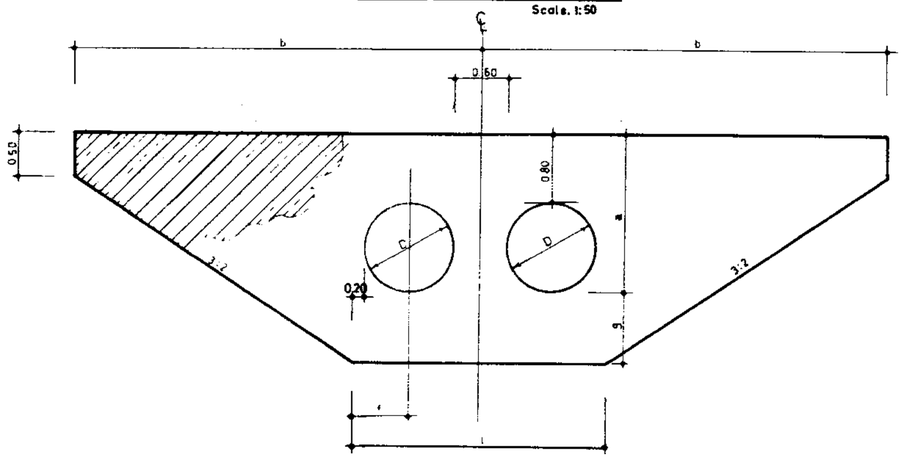

SECTION D-D
Scale. 1:50

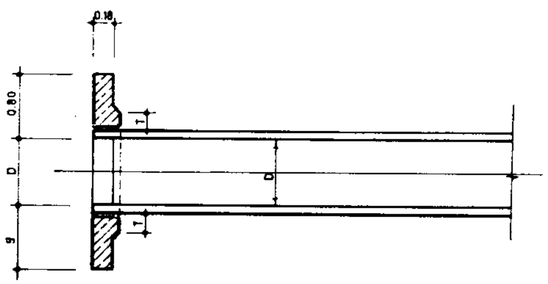

SECTION A-A
One barrel pipe culvert Scale. 1:40

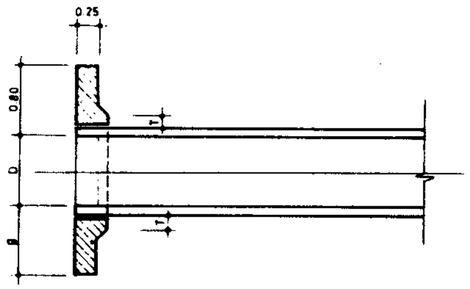

SECTION C-C
Two barrel pipe culvert Scale. 1:40

ONE BARREL HEADWALL DIMENSION TABLE

Dia. m.	a	b	g	e	f	R/Bar Kg.	Conc m^3	FORM m^2
0.30	1.10	2.45	0.60	0.30	0.35	71.40	0.90	11.42
0.40	1.20	2.65	0.60	0.30	0.40	80.86	1.01	13.09
0.50	1.30	2.85	0.60	0.30	0.45	92.35	1.12	14.84
0.60	1.40	3.05	0.60	0.30	0.50	98.49	1.24	16.71
0.70	1.50	3.25	0.80	0.50	0.55	126.92	1.57	21.80
0.80	1.60	3.45	0.80	0.50	0.60	133.28	1.71	24.19
0.90	1.70	3.65	0.80	0.50	0.65	156.34	1.85	26.58
1.00	1.80	3.85	0.80	0.50	0.70	163.29	1.99	29.12

TWO BARREL HEADWALL DIMENSION TABLE

Dia. m.	a	b	g	f	l	R/Bar. Kg.	Conc. m^3	FORM m^2
0.70	1.50	3.90	0.80	0.55	2.40	301.70	3.08	27.15
0.80	1.60	4.15	0.80	0.60	2.60	322.83	3.37	30.84
0.90	1.70	4.40	0.80	0.65	2.80	376.41	3.68	32.40
1.00	1.80	4.65	0.80	0.70	3.00	393.59	4.00	34.89

NOTES:

① These types of head walls could be used at the culvert ends under compacted fills in place of transitions type ① to ⑤ or inlet and outlet transitions.

② "D" designated as diameter of opening.

③ To select headwall:
a) define D for pipe culvert's current section with respect to hydraulic criteria discussed on dwg. N° 11/6/1/02 and other field conditions.
b) select the suitable headwall which fits the required "D" value, from dimension table.

REFERENCE DWGS, For head wall reinforcement see dwg. N° 14/1/3/01
For pipe connection to structure see dwgs.17/1/1/01 TO 17/1/1/03
For general notes see dwgs. N° 20/2/1/01 To 20/2/1/03

Scale: 1:40_1:50	IRRIGATION & DRAINAGE STANDARDS		ISLAMIC REPUBLIC OF IRAN
Date:	DWG. N° 14/1/1/02	TYPICAL HEADWALL FOR PIPE CULVERTS (STRAIGHT) PLAN & SECTION	MINISTRY OF PLAN & BUDJET
Approved:	Sheet. N° 2 of 9 Rev. N°		TECHNICAL RESEARCH AND STANDARD BUREAU

omoorepeyman.ir

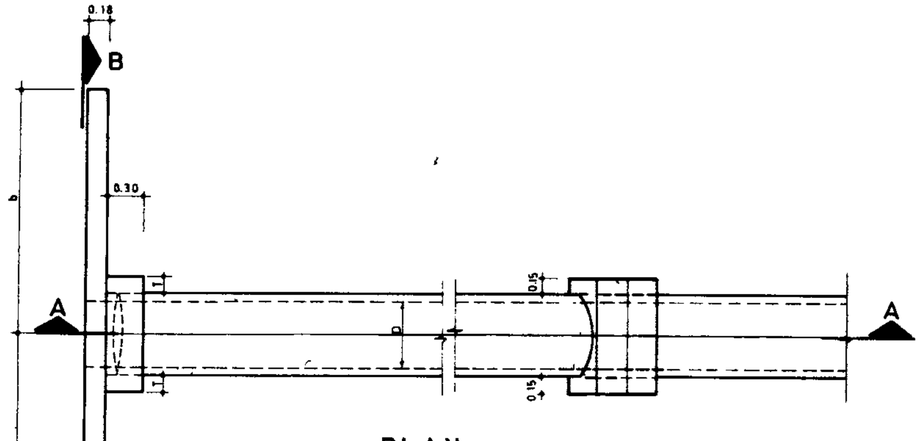

PLAN

Scale. 1:40

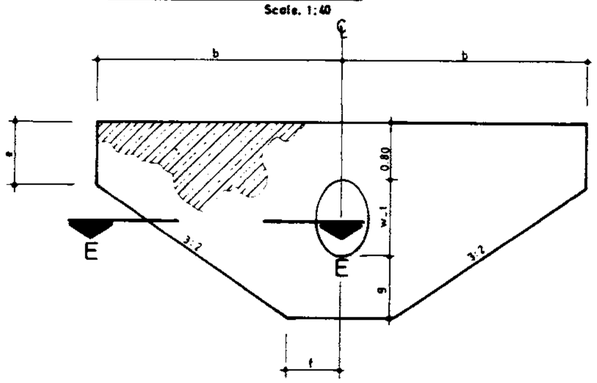

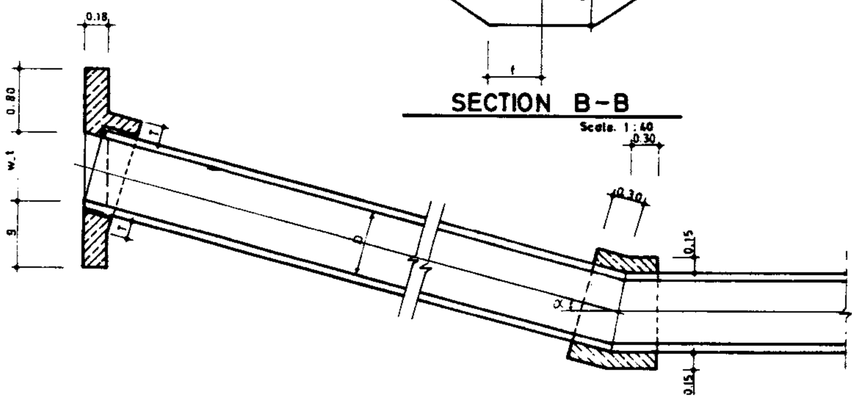

SECTION B–B

Scale. 1:40

SECTION A–A

Scale. 1:40

SECTION E–E

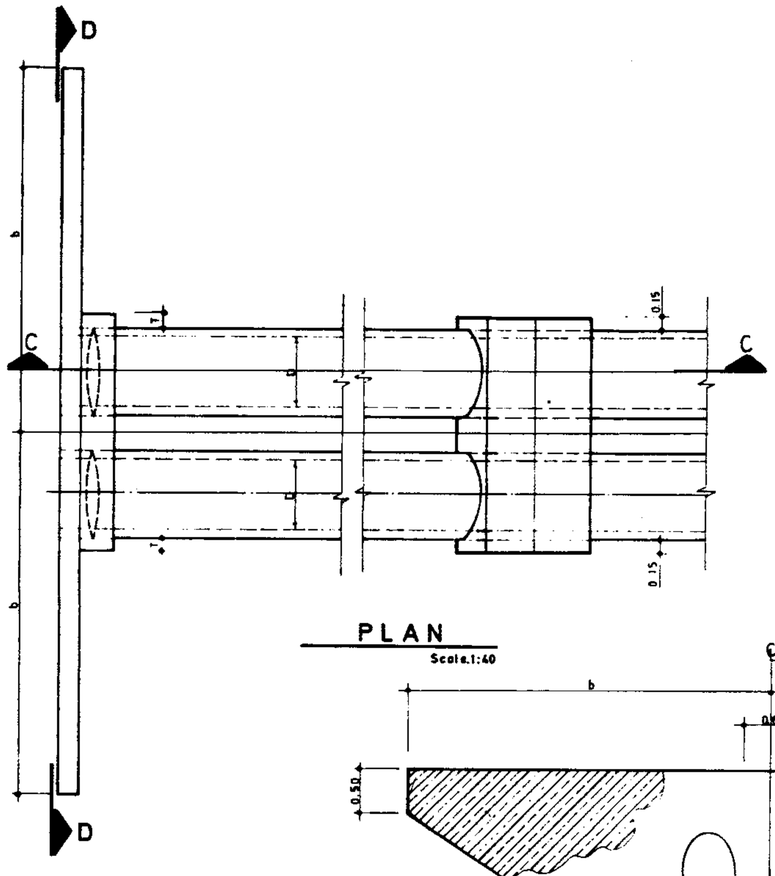

PLAN

Scale.1:40

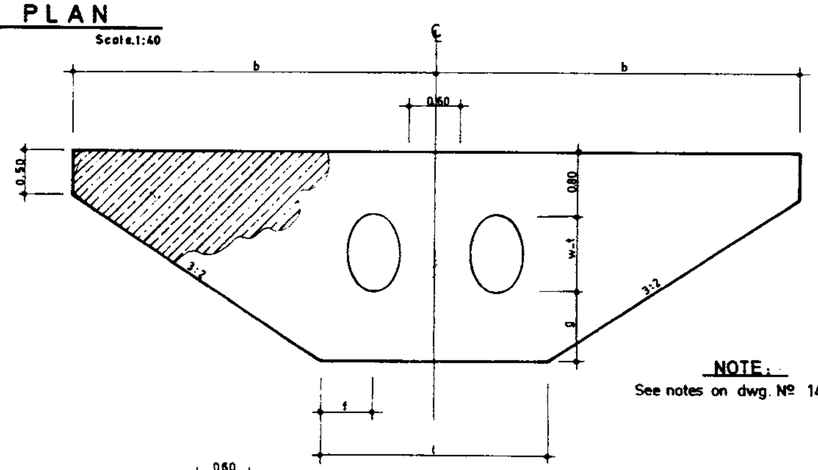

NOTE:

See notes on dwg. № 14/1/1/02

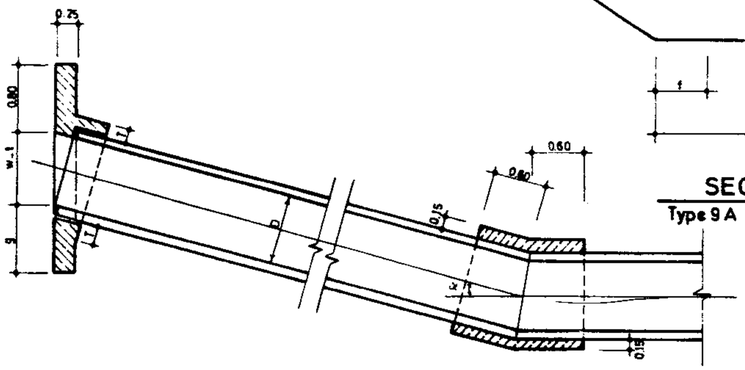

SECTION D–D

Type 9 A

Scale. 1:50

SECTION C–C

Scale. 1:50

ONE BARREL HEADWALL DIMENSION TABLE

Dia. m.	b	g	e	f	R/Bar. Kg.	Conc. *m³	FORM m²
0.30	2.45	0.60	0.30	0.35	71.40	0.90	11.42
0.40	2.65	0.60	0.30	0.40	80.86	1.01	13.09
0.50	2.85	0.60	0.30	0.45	92.35	1.12	14.84
0.60	3.05	0.60	0.30	0.50	98.49	1.24	16.71
0.70	3.25	0.80	0.50	0.55	126.92	1.57	21.80
0.80	3.45	0.80	0.50	0.60	133.28	1.71	24.19
0.90	3.65	0.80	0.50	0.65	156.34	1.85	26.58
1.00	3.85	0.80	0.50	0.70	163.29	1.99	29.12

Concrete quantities determined for $\alpha = 0$

TOW BARREL HEADWALL DIMENSION TABLE

Dia. m.	b	g	f	l	R/Bar Kg.	Conc *m³	FORM m²
0.70	3.90	0.80	0.55	2.40	301.70	3.08	27.15
0.80	4.15	0.80	0.60	2.60	322.83	3.37	30.84
0.90	4.40	0.80	0.65	2.80	376.41	3.38	32.40
1.00	4.65	0.80	0.70	3.00	393.59	4.00	34.89

* Concrete quantities determined for $\alpha = 0$

REFERENCE DWGS: For head wall reinforcement see dwg. №: 14/1/3/01
For pipe connection in structure see dwgs. №: 17/1/1/01 TO 17/1/1/03
For general notes see dwgs. № 20/2/1/01 TO 20/2/1/03

Scale: 1:40–1:50	IRRIGATION & DRAINAGE STANDARDS	
Date:	DWG. № 14/1/1/03	TYPICAL HEADWALL FOR PIPE CULVERTS (INCLINED) PLAN & SECTION
Approved:	Sheet № 3 of 9 Rev. №	

ISLAMIC REPUBLIC OF IRAN
MINISTRY OF PLAN & BUDJET
TECHNICAL RESEARCH AND STANDARD BUREAU

omoorepeyman.ir

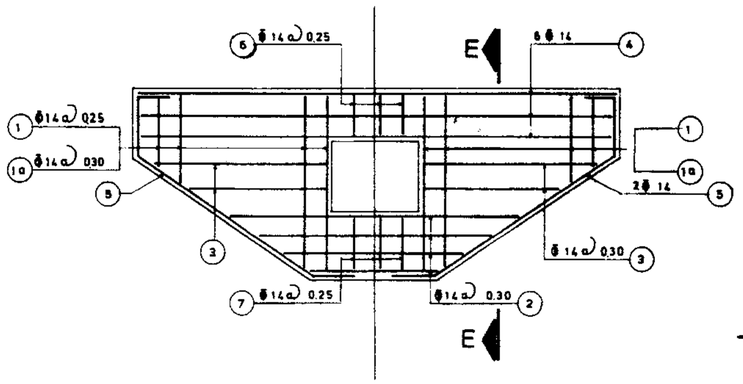

SECTION C-C

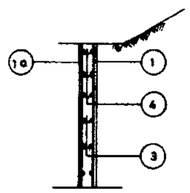

SECTION E-E

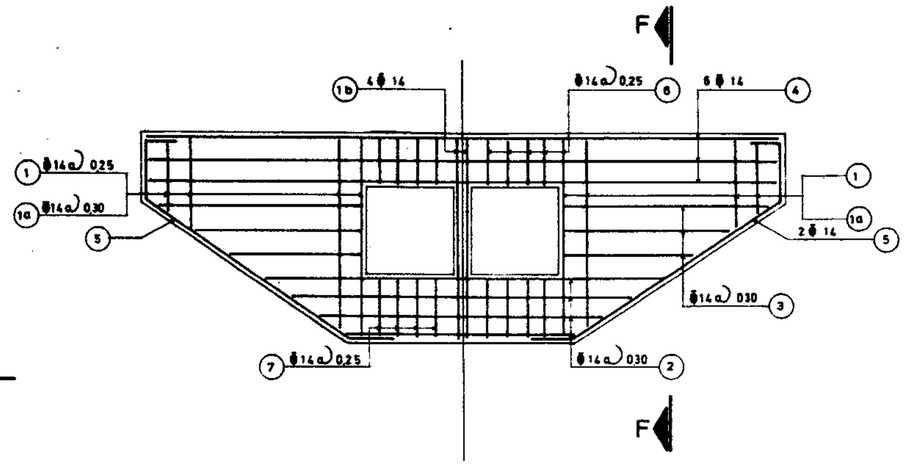

SECTION D-D

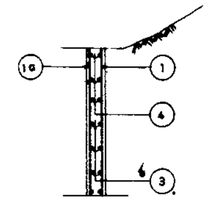

SECTION F-F

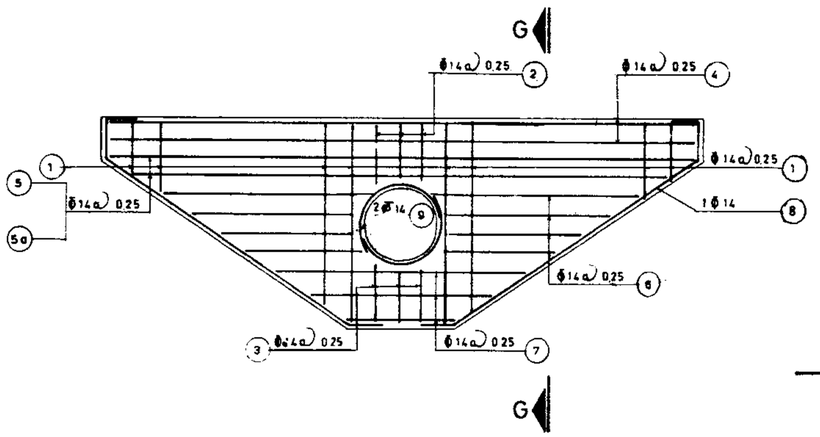

SECTION B-B

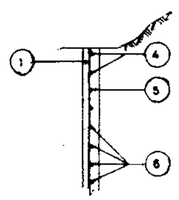

SECTION G-G

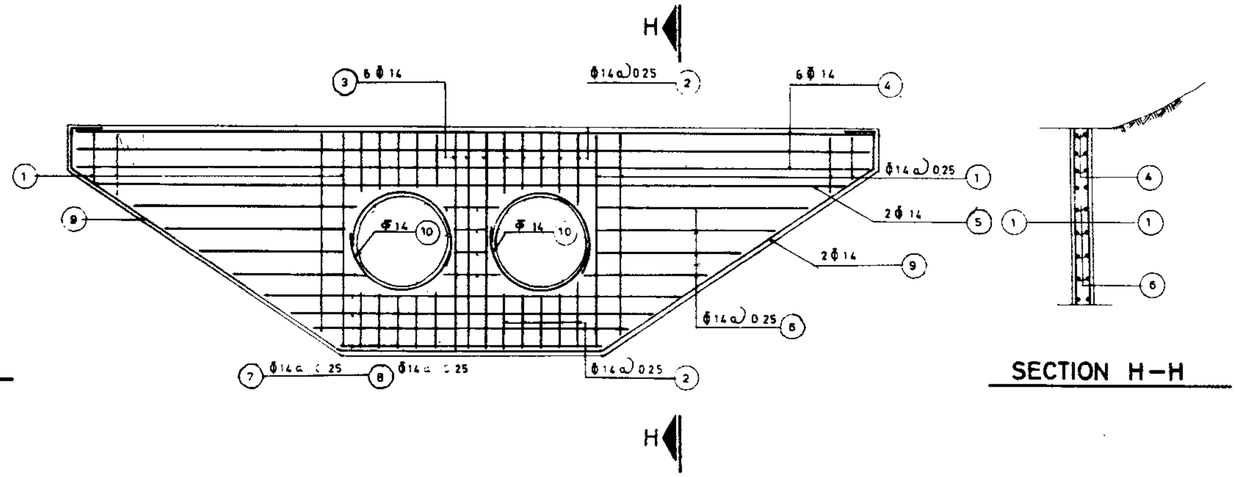

SECTION D´-D´

SECTION H-H

REFERENCE DWGS: For plan & section see dwgs. Nº. 14/1/1/01 TO 14/1/1/03

For list of reinforcement see dwgs. Nº. 14/1/3/02 TO 14/1/3/09

Scale:	IRRIGATION & DRAINAGE STANDARDS	
Date:	DWG. Nº. 14/1/3/01	HEAD WALLS FOR 1 & 2 BARRELS BOX & PIPE CULVERTS REINFORCEMENT SECTION
Approved:	Sheet Nº. 6 of 9 Rev. Nº.	

ISLAMIC REPUBLIC OF IRAN
MINISTRY OF PLAN & BUDJET
TECHNICAL RESEARCH AND STANDARD BUREAU

0.60x0.80

Pos	№.	FORM	UNIT LENG.	TOTAL LENG.
1	16	0.75 ~ 1.80	1.23	19.68
1a	14	0.75 ~ 1.70	1.23	17.22
2	6	1.12 ~ 2.62	1.87	11.22
3	4	1.10 ~ 1.85 | 0.30	1.78	7.12
4	6	4.62	4.62	27.72
5	4	0.90 — 2.01 — 0.90 | 0.55	4.36	17.44
6	3	0.52 [0.12 / 0.50] 0.38	2.04	6.12
7	3	0.50 [0.50 / 0.12] 0.38	2.00	6.00
				112.52

112.52 × 1.21 = 136.15 Kg

0.60x0.80

Pos	№.	FORM	UNIT LENG.	TOTAL LENG.
1	20	0.90 ~ 2.10	1.50	30.00
1a	16	0.90 ~ 2.10	1.50	24.00
2	8	1.12 ~ 3.22	2.17	17.36
3	8	1.15 ~ 2.20 | 0.30	1.98	15.84
4	6	5.32	5.32	31.92
5	4	1.00 — 2.64 — 1.00 | 0.70	5.14	20.56
6	3	0.52 [0.12 / 0.50] 0.38	2.04	6.12
7	3	0.70 [0.50 / 0.12] 0.38	2.40	7.20
				153.00

153.00 × 1.21 = 185.13 Kg

0.60x1.00

Pos	№.	FORM	UNIT LENG.	TOTAL LENG.
1	20	0.90 ~ 2.10	1.50	30.00
1a	16	0.90 ~ 2.10	1.50	24.00
2	8	1.32 ~ 3.42	2.37	18.96
3	8	1.15 ~ 2.20 | 0.30	1.98	15.84
4	6	5.52	5.52	33.12
5	4	1.00 — 2.64 — 1.00 | 0.70	5.14	20.56
6	3	0.52 [0.12 / 0.50] 0.38	2.04	6.12
7	3	0.70 [0.50 / 0.12] 0.38	2.40	7.20
				155.80

155.80 × 1.21 = 188.52 Kg

0.80x1.50

Pos	№.	FORM	UNIT LENG.	TOTAL LENG.
1	20	0.90 ~ 2.10	1.50	30.00
1a	16	0.90 ~ 2.10	1.50	24.00
2	8	1.82 ~ 3.92	2.87	22.96
3	8	1.15 ~ 2.20 | 0.30	1.98	15.84
4	6	6.02	6.02	36.12
5	4	1.00 — 2.44 — 1.00 | 0.70	5.14	20.56
6	5	0.52 [0.12 / 0.50] 0.38	2.04	10.20
7	5	0.70 [0.50 / 0.12] 0.38	2.40	12.00
				171.68

171.68 × 1.21 = 207.73Kg

1.00x1.00

Pos	№.	FORM	UNIT LENG.	TOTAL LENG.
1	22	0.90 ~ 2.30	1.60	35.20
1a	18	0.90 ~ 2.30	1.60	28.80
2	8	1.32 ~ 3.42	2.37	18.96
3	12	1.15 ~ 2.50 | 0.30	2.13	25.56
4	6	6.12	6.12	36.72
5	4	1.10 — 2.78 — 1.10 | 0.70	5.68	22.72
6	3	0.52 [0.12 / 0.50] 0.38	2.04	6.12
7	3	0.70 [0.50 / 0.12] 0.38	2.40	7.20
				181.28

181.28 × 1.21 = 219.35Kg

1.00x1.50

Pos	№.	FORM	UNIT LENG.	TOTAL LENG.
1	22	0.90 ~ 2.30	1.60	35.20
1a	18	0.90 ~ 2.30	1.60	28.80
2	8	1.82 ~ 3.92	2.87	22.96
3	12	1.15 ~ 2.50 | 0.30	2.13	25.56
4	6	6.52	6.62	39.72
5	4	1.10 — 2.78 — 1.10 | 0.70	5.68	22.72
6	5	0.52 [0.12 / 0.50] 0.38	2.04	10.20
7	5	0.70 [0.50 / 0.12] 0.38	2.40	12.00
				197.16

197.16 × 1.21 = 238.56 Kg

ALL BARS ARE ϕ 14(1.21 Kg/m)

REFERENCE DWGS: For reinforcement see dwg. №. 14/1/3/01
For bars with variable unit length see note under the same title at dwg. №. 20/2/1/01

Scale:	IRRIGATION & DRAINAGE STANDARDS	
Date:	DWG. №. 14/1/3/02	HEAD WALLS FOR 1 BARREL BOX CULVERT LIST OF REINFORCEMENT
Approved:	Sheet. №. 5 of 9 Rev. №.	

ISLAMIC REPUBLIC OF IRAN
MINISTRY OF PLAN & BUDJET
TECHNICAL RESEARCH AND STANDARD BUREAU

omoorepeyman.ir

1.00 x 2.00

Pos	No.	FORM	UNIT LENG.	TOTAL LENG.
1	22	1.00 ~ 2.50	1.75	38.50
1a	20	1.00 ~ 2.50	1.75	35.00
2	10	2.32 ~ 5.02	3.67	36.70
3	12	1.30 ~ 2.65, 0.30	2.28	27.36
4	6	7.42	7.42	44.52
5	4	1.15, 2.95, 1.15, 0.80	6.05	24.20
6	8	0.52, 0.12, 0.50, 0.38	2.04	16.32
7	8	0.90, 0.50, 0.12, 0.38	2.80	22.40
				245.00

245.00 X 1.21 = 296.45 Kg

1.50 x 1.50

Pos	No.	FORM	UNIT LENG.	TOTAL LENG.
1	28	1.10 ~ 3.00	2.05	57.40
1a	24	1.10 ~ 3.00	2.05	49.20
2	10	1.82 ~ 4.52	3.17	31.70
3	16	1.15 ~ 3.25, 0.30	2.50	40.00
4	6	8.12	8.12	48.72
5	4	1.30, 3.73, 1.30, 0.90	7.23	28.92
6	5	0.52, 0.12, 0.50, 0.38	2.04	10.20
7	5	0.90, 0.50, 0.12, 0.38	2.80	14.00
				280.14

280.14 X 1.21 = 338.97 Kg

1.50 x 2.00

Pos	No.	FORM	UNIT LENG.	TOTAL LENG.
1	28	1.10 ~ 3.00	2.05	57.40
1a	24	1.10 ~ 3.00	2.05	49.20
2	10	2.32 ~ 5.02	3.67	36.70
3	16	1.15 ~ 3.25, 0.30	2.50	40.00
4	6	8.62	8.62	51.72
5	4	1.30, 3.73, 1.30, 0.90	7.23	28.92
6	7	0.52, 0.12, 0.50, 0.38	2.04	14.28
7	7	0.90, 0.50, 0.12, 0.38	2.80	19.60
				297.82

297.82 X 1.21 = 360.36 Kg

1.75 x 2.00

Pos	No.	FORM	UNIT LENG.	TOTAL LENG.
1	30	1.10 ~ 3.25	2.18	65.40
1a	26	1.10 ~ 3.25	2.18	56.68
2	10	2.32 ~ 5.02	3.67	36.70
3	20	1.13 ~ 3.60, 0.30	2.67	53.40
4	6	9.32	9.32	55.92
5	4	1.40, 4.16, 1.40, 0.90	7.86	31.44
6	7	0.52, 0.12, 0.50, 0.38	2.04	14.28
7	7	0.90, 0.50, 0.12, 0.38	2.80	19.60
				333.42

333.42 X 1.21 = 403.44 Kg

2.00 x 2.00

Pos	No.	FORM	UNIT LENG.	TOTAL LENG.
1	32	1.30 ~ 3.50	2.40	76.80
1a	26	1.30 ~ 3.50	2.40	62.40
2	10	2.32 ~ 5.02	3.67	36.70
3	24	0.85 ~ 3.70, 0.30	2.58	61.92
4	6	9.52	9.52	57.12
5	4	1.45, 4.24, 1.45, 1.10	8.24	32.96
6	7	0.52, 0.12, 0.50, 0.38	2.04	14.28
7	7	0.90, 0.50, 0.12, 0.38	2.80	19.60
				361.78

361.78 X 1.21 = 437.75 Kg

2.00 x 2.50

Pos	No.	FORM	UNIT LENG.	TOTAL LENG.
1	34	1.30 ~ 3.70	2.50	85.00
1a	28	1.30 ~ 3.70	2.50	70.00
2	10	2.82 ~ 6.12	4.47	44.70
3	24	1.15 ~ 4.00, 0.30	2.88	69.12
4	6	10.62	10.62	63.72
5	4	1.55, 4.58, 1.55, 1.10	8.78	35.12
6	9	0.52, 0.12, 0.50, 0.38	2.04	18.36
7	8	1.10, 0.50, 0.12, 0.38	3.20	28.80
				414.82

414.82 X 1.21 = 501.93 Kg

ALL BARS ARE Φ14 (1.21 kg/m)

REFERENCE DWGS: For reinforcement see dwg. No 14/1/3/01
For bars with variable unit length see note under the same title at dwg. No 20/2/101

Scale:	IRRIGATION & DRAINAGE STANDARDS	
Date:	DWG. No 14/1/3/03	HEAD WALLS FOR 1 BARREL BOX CULVERT LIST OF REINFORCEMENT
Approved.	Sheet. No 6 of 9 Rev. No	

ISLAMIC REPUBLIC OF IRAN
MINISTRY OF PLAN & BUDJET
TECHNICAL RESEARCH AND STANDARD BUREAU

omoorepeyman.ir

1.00 x 1.00

Pos	№.	FORM	UNIT LENG.	TOTAL LENG.
1	22	0.90 ~ 2.30	1.60	35.20
1a	18	0.90 ~ 2.30	1.60	28.80
1b	4	2.30	2.30	9.20
2	8	2.52 ~ 4.62	3.57	28.56
3	12	1.15 ~ 2.50, 0.30	2.13	25.56
4	6	7.32	7.32	43.92
5	4	1.10, 2.78, 1.70, 0.70	5.68	22.72
6	6	0.52, 0.12, 0.50, 0.38	2.04	12.24
7	6	0.70, 0.50, 0.12, 0.38	2.40	14.40
				220.60

220.60 X 1.21 = 266.93 Kg

1.00 x 1.50

Pos	№.	FORM	UNIT LENG.	TOTAL LENG.
1	22	0.90 ~ 2.30	1.60	35.20
1a	18	0.90 ~ 2.30	1.60	28.80
1b	4	2.30	2.30	9.20
2	8	3.52 ~ 5.62	4.57	36.56
3	12	1.15 ~ 2.50, 0.30	2.13	25.56
4	6	8.32	8.32	49.92
5	4	1.10, 2.78, 1.70, 0.70	5.68	22.72
6	10	0.52, 0.12, 0.50, 0.38	2.04	20.40
7	10	0.70, 0.50, 0.12, 0.38	2.40	24.00
				252.46

252.46 X 1.21 = 305.48 Kg

1.00 x 2.00

Pos	№.	FORM	UNIT LENG.	TOTAL LENG.
1	22	1.10 ~ 2.90	1.80	39.60
1a	18	1.10 ~ 2.50	1.80	32.40
1b	4	2.50	2.50	10.00
2	10	4.52 ~ 7.22	5.87	58.70
3	12	1.15 ~ 2.50, 0.30	2.13	25.56
4	6	9.32	9.32	55.92
5	4	1.10, 2.78, 1.70, 0.90	5.88	23.52
6	14	0.52, 0.12, 0.50, 0.38	2.04	28.56
7	14	0.90, 0.50, 0.12, 0.38	2.80	39.20
				313.46

313.46 X 1.21 = 379.29 Kg

1.50 x 1.50

Pos	№.	FORM	UNIT LENG.	TOTAL LENG.
1	28	1.10 ~ 3.00	2.05	57.40
1a	24	1.10 ~ 3.00	2.05	49.20
1b	4	3.00	3.00	12.00
2	10	3.52 ~ 6.22	4.87	48.70
3	16	1.15 ~ 3.25, 0.30	2.50	40.00
4	6	9.82	9.82	58.92
5	4	1.30, 3.73, 1.30, 0.90	7.23	28.92
6	10	0.52, 0.12, 0.50, 0.38	2.04	20.40
7	10	0.90, 0.50, 0.12, 0.38	2.80	28.00
				343.54

343.54 X 1.21 = 415.68 Kg

1.50 x 2.00

Pos	№.	FORM	UNIT LENG.	TOTAL LENG.
1	28	1.10 ~ 3.00	2.05	57.40
1a	24	1.10 ~ 3.00	2.05	49.20
1b	4	3.00	3.00	12.00
2	10	4.52 ~ 7.22	5.87	58.70
3	16	1.15 ~ 3.25, 0.30	2.50	40.00
4	6	10.82	10.82	64.92
5	4	1.30, 3.73, 1.30, 0.90	7.23	28.92
6	12	0.52, 0.12, 0.50, 0.38	2.04	24.48
7	12	0.90, 0.50, 0.12, 0.38	2.80	33.60
				369.22

369.22 X 1.21 = 446.76 Kg

1.50 x 2.50

Pos	№.	FORM	UNIT LENG.	TOTAL LENG.
1	28	1.30 ~ 3.20	2.25	63.00
1a	24	1.30 ~ 3.20	2.25	54.00
1b	4	3.20	3.20	12.80
2	10	5.52 ~ 8.82	7.17	71.70
3	16	1.15 ~ 3.25, 0.30	2.50	40.00
4	6	11.82	11.82	70.92
5	4	1.30, 3.73, 1.30, 1.10	7.43	29.72
6	18	0.52, 0.12, 0.50, 0.38	2.04	36.72
7	18	1.10, 0.50, 0.12, 0.38	3.20	57.60
				436.46

436.46 X 1.21 = 528.12 Kg

2.00 x 2.00

Pos	№.	FORM	UNIT LENG.	TOTAL LENG.
1	34	1.30 ~ 3.70	2.50	85.00
1a	28	1.30 ~ 3.70	2.50	70.00
1b	4	3.70	3.70	14.80
2	10	4.52 ~ 7.82	6.17	61.70
3	24	1.15 ~ 4.00, 0.30	2.58	61.92
4	6	12.32	12.32	73.92
5	4	1.55, 4.58, 1.55, 1.10	8.78	35.12
6	14	0.52, 0.12, 0.50, 0.38	2.04	28.56
7	14	1.10, 0.50, 0.12, 0.38	3.20	44.80
				475.82

475.82 X 1.21 = 575.74 Kg

2.00 x 2.50

Pos	№.	FORM	UNIT LENG.	TOTAL LENG.
1	34	1.30 ~ 3.70	2.50	85.00
1a	28	1.30 ~ 3.70	2.50	70.00
1b	4	3.70	3.70	14.80
2	10	5.52 ~ 8.82	7.17	71.70
3	24	1.15 ~ 4.00, 0.30	2.88	69.12
4	6	13.32	13.32	79.92
5	4	1.55, 4.58, 1.55, 1.10	8.78	35.12
6	18	0.52, 0.12, 0.50, 0.38	2.04	36.72
7	18	1.10, 0.50, 0.12, 0.38	3.20	57.60
				519.98

519.98 X 1.21 = 629.18 Kg

ALL BARS ARE Φ14 (1.21 kg/m)

REFERENCE DWGS: For reinforcement see dwg. №. 14/1/3/01

For bars with variable unit length see note under the same title at dwg.№. 20/2/1/01

Scale:	IRRIGATION & DRAINAGE STANDARDS	
Date:	DWG. №. 14/1/3/04	HEAD WALLS FOR 2 BARRELS BOX CULVERT LIST OF REINFORCEMENT
Approved:	Sheet. №. 7 of 9 Rev. №.	

ISLAMIC REPUBLIC OF IRAN
MINISTRY OF PLAN & BUDJET
TECHNICAL RESEARCH AND STANDARD BUREAU

@omoorepeyman.ir

Dia. 0.30

Pos	No.	FORM	UNIT LENG.	TOTAL LENG.
1	18	0.40 ~ 1.60	1.00	18.00
2	1	0.66 ~ 0.87	0.77	0.77
3	1	0.46 ~ 0.67	0.57	0.57
4	2	4.80	4.80	9.60
5	1	4.32	4.32	4.32
5a	1	3.63	3.63	3.63
6	2	1.00 ~ 1.45	1.23	2.46
7	4	0.62 ~ 2.12	1.37	5.48
8	2	0.60 / 2.33 / 1.40 / 0.20	4.53	9.06
9	2	0.40 ⌀ 0.40	2.56	5.12
				59.01

59.01 X 1.21 = 71.40 Kg

Dia. 0.40

Pos	No.	FORM	UNIT LENG.	TOTAL LENG.
1	20	0.40 ~ 1.70	1.05	21.00
2	2	0.66 ~ 0.92	0.79	1.58
3	2	0.46 ~ 0.72	0.59	1.18
4	2	5.20	5.20	10.40
5	1	4.72	4.72	4.72
5a	1	4.03	4.03	4.03
6	2	1.00 ~ 1.60	1.30	2.60
7	4	0.72 ~ 2.22	1.47	5.88
8	2	0.70 / 2.50 / 1.40 / 0.20	4.80	9.60
9	2	0.40 ⌀ 0.40	2.92	5.84
				66.83

66.83 X 1.21 = 80.86 Kg

Dia. 0.50

Pos	No.	FORM	UNIT LENG.	TOTAL LENG.
1	22	0.40 ~ 1.80	1.10	24.20
2	2	0.66 ~ 0.97	0.82	1.64
3	2	0.46 ~ 0.77	0.62	1.24
4	2	5.60	5.60	11.20
5	1	5.12	5.12	5.12
5a	1	4.43	4.43	4.43
6	4	1.00 ~ 1.75	1.38	5.52
7	4	0.82 ~ 2.32	1.57	6.28
8	2	0.80 / 2.67 / 1.40 / 0.20	5.07	10.14
9	2	0.40 ⌀ 0.40	3.28	6.56
				76.33

76.33 X 1.21 = 92.35 Kg

Dia· 0.60

Pos	No.	FORM	UNIT LENG.	TOTAL LENG.
1	22	0.40 ~ 1.80	1.15	25.30
2	2	0.64 ~ 1.02	0.83	1.66
3	2	0.44 ~ 0.82	0.63	1.26
4	2	6.00	6.00	12.00
5	1	5.58	5.58	5.58
5a	1	4.92	4.92	4.92
6	4	1.00 ~ 1.90	1.45	5.80
7	4	0.92 ~ 2.42	1.67	6.68
8	2	0.90 / 2.90 / 1.30 / 0.20	5.30	10.60
9	2	0.40 ⌀ 0.40	3.80	7.60
				81.40

81.40 X 1.21 = 98.49 Kg

Dia 0.70

Pos	No.	FORM	UNIT LENG.	TOTAL LENG.
1	24	0.60 ~ 2.20	1.40	33.60
2	3	0.64 ~ 1.07	0.86	2.58
3	3	0.64 ~ 1.07	0.86	2.58
4	3	6.40	6.40	19.20
5	1	5.74	5.74	5.74
5a	—		—	—
6	6	1.30 ~ 2.35	1.83	10.98
7	5	1.02 ~ 3.12	2.07	10.35
8	2	1.00 / 3.07 / 1.30 / 0.40	5.77	11.54
9	2	0.40 ⌀ 0.40	4.16	8.32
				104.89

104.89 X 1.21 = 126.92 Kg

Dia 0.80

Pos	No.	FORM	UNIT LENG.	TOTAL LENG.
1	24	0.60 ~ 2.30	1.45	34.80
2	3	0.62 ~ 1.12	0.87	2.61
3	3	0.62 ~ 1.12	0.87	2.61
4	3	6.80	6.80	20.40
5	1	6.14	6.14	6.14
5a	—		—	—
6	6	1.30 ~ 2.50	1.90	11.40
7	5	1.12 ~ 3.22	2.17	10.85
8	2	1.10 / 3.21 / 1.30 / 0.40	6.01	12.02
9	2	0.40 ⌀ 0.40	4.66	9.32
				110.15

110.15 X 1.21 = 133.28 Kg

Dia 0.90

Pos	No.	FORM	UNIT LENG.	TOTAL LENG.
1	26	0.60 ~ 2.40	1.50	39.00
2	4	0.62 ~ 1.17	0.90	3.60
3	4	0.62 ~ 1.17	0.90	3.60
4	3	7.20	7.20	21.60
5	1	6.54	6.54	6.54
5a	—		—	—
6	8	1.30 ~ 2.65	1.98	15.84
7	5	1.22 ~ 3.32	2.27	11.35
8	2	1.20 / 3.38 / 1.30 / 0.40	6.28	12.56
9	3	0.40 ⌀ 0.40	5.04	15.12
				129.21

129.21 X 1.21 = 156.34 Kg

Dia 1.00

Pos	No.	FORM	UNIT LENG.	TOTAL LENG.
1	26	0.60 ~ 2.50	1.55	40.30
2	4	0.62 ~ 1.22	0.92	3.68
3	4	0.62 ~ 1.22	0.92	3.68
4	3	7.60	7.60	22.80
5	1	6.94	6.94	6.94
5a	—		—	—
6	8	1.30 ~ 2.80	2.05	16.40
7	5	1.32 ~ 3.42	2.37	11.85
8	2	1.30 / 3.55 / 1.30 / 0.40	6.55	13.10
9	3	0.40 ⌀ 0.40	5.40	16.20
				134.95

134.95 X 1.21 = 163.29 Kg

ALL BARS ARE Φ14(1.21 kg/m)

REFERENCE DWGS: For reinforcement see dwg. No. 14/1/3/01

For bars with variable unit length see note under the same title at dwg. No. 20/2/1/01

Scale:	IRRIGATION & DRAINAGE STANDARDS	ISLAMIC REPUBLIC OF IRAN MINISTRY OF PLAN & BUDJET TECHNICAL RESEARCH AND STANDARD BUREAU
Date:	DWG. No 14/1/3/05	HEAD WALLS FOR 1 BARREL PIPE CULVERT LIST OF REINFORCEMENT
Approved:	Sheet. No 8 of 9 | Rev. No	

@omoorepeyman.ir

Dia 0.70

Pos.	No.	FORM	UNIT LENG.	TOTAL LENG.
1	44	0.60 ~ 2.20	1.40	61.60
2	24	0.64 ~ 1.07	0.86	20.64
3	6	2.20	2.20	13.20
4	6	7.70	7.70	46.20
5	2	7.04	7.04	14.08
6	12	1.52 ~ 2.27	1.90	22.80
7	8	2.32 ~ 4.42	3.37	26.96
8	6	0.34 ~ 1.04	0.69	4.14
9	4	1.15, 3.07, 1.35, 0.40	5.77	23.08
10	4	0.40 ⌀ 0.40	4.16	16.64
				249.34

249.34 X 1.21 = 301.70 Kg

Dia 0.80

Pos.	No.	FORM	UNIT LENG.	TOTAL LENG.
1	48	0.60 ~ 2.30	1.45	69.60
2	24	0.62 ~ 1.12	0.87	20.88
3	6	2.30	2.30	13.80
4	6	8.20	8.20	49.20
5	2	7.54	7.54	15.08
6	12	1.20 ~ 2.40	1.80	21.60
7	8	2.52 ~ 4.62	3.57	28.56
8	6	0.30 ~ 1.50	0.90	5.40
9	4	1.20, 3.21, 1.20, 0.40	6.01	24.04
10	4	0.40 ⌀ 0.40	4.66	18.64
				266.80

266.80 X 1.21 = 322.83Kg

Dia 0.90

Pos.	No.	FORM	UNIT LENG.	TOTAL LENG.
1	52	0.60 ~ 2.40	1.50	78.00
2	32	0.62 ~ 1.17	0.90	28.80
3	6	2.40	2.40	14.40
4	6	8.70	8.70	52.20
5	2	8.04	8.04	16.08
6	16	1.20 ~ 2.55	1.88	30.08
7	8	2.72 ~ 4.82	3.77	30.16
8	8	0.30 ~ 1.20	0.75	6.00
9	4	1.25, 3.08, 1.25, 0.40	6.28	25.12
10	6	0.40 ⌀ 0.40	5.04	30.24
				311.08

311.08 X 1.21 = 376.41 Kg

Dia 1.00

Pos.	No.	FORM	UNIT LENG.	TOTAL LENG.
1	52	0.60 ~ 2.50	1.55	80.60
2	32	0.62 ~ 1.22	0.92	29.44
3	6	2.50	2.50	15.00
4	6	9.20	9.20	55.20
5	2	8.54	8.54	17.08
6	16	1.20 ~ 2.70	1.95	31.20
7	8	2.92 ~ 5.02	3.97	31.76
8	8	0.30 ~ 1.30	0.80	6.40
9	4	1.30, 3.55, 1.30, 0.40	6.55	26.20
10	6	0.40 ⌀ 0.40	5.40	26.76
				325.28

325.28 X 1.21 = 393.59 Kg

ALL BARS ARE ⌀14(1.21 kg/m)

REFERENCE DWGS: For reinforcement see dwg. No. 14/1/3/01

For bars with variable unit length see note under the same title at dwg.No. 20/2/1/01

Scale:	IRRIGATION & DRAINAGE STANDARDS	
Date:	DWG. No 14/1/3/06	HEAD WALLS FOR 2 BARRELS PIPE CULVERT LIST OF REINFORCEMENT
Approved:	Sheet. No 9 of 9	Rev. No

ISLAMIC REPUBLIC OF IRAN
MINISTRY OF PLAN & BUDJET
TECHNICAL RESEARCH AND STANDARD BUREAU

omoorepeyman.ir

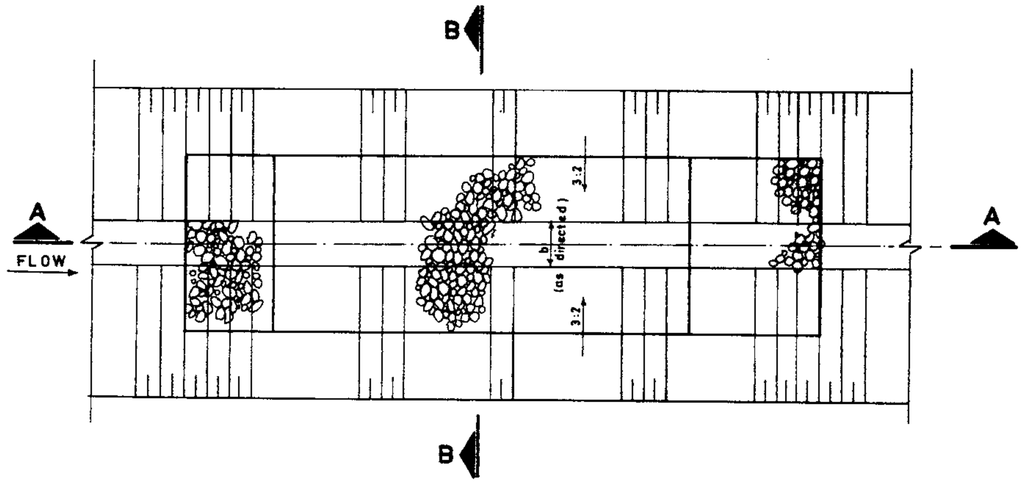

PLAN

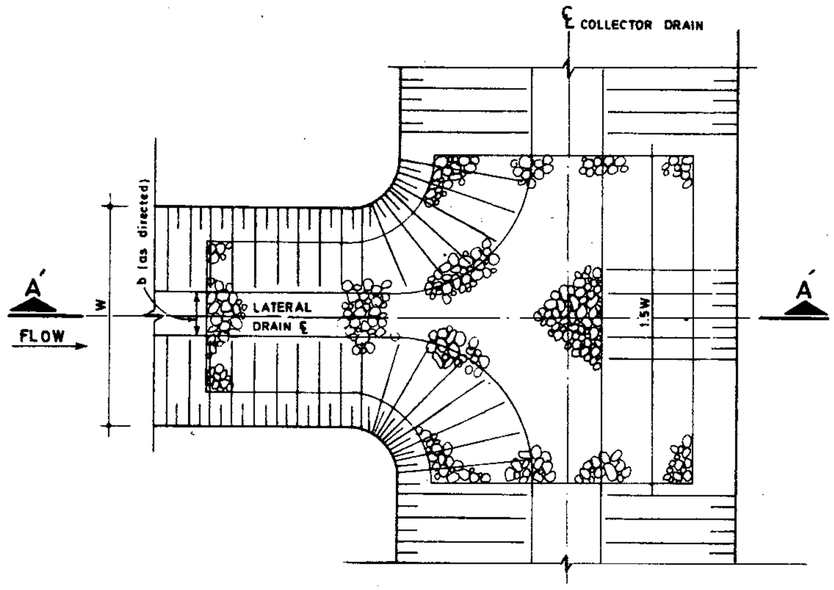

PLAN

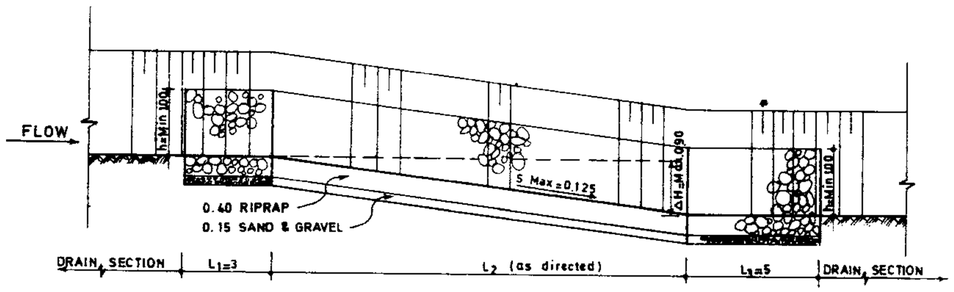

SECTION A-A

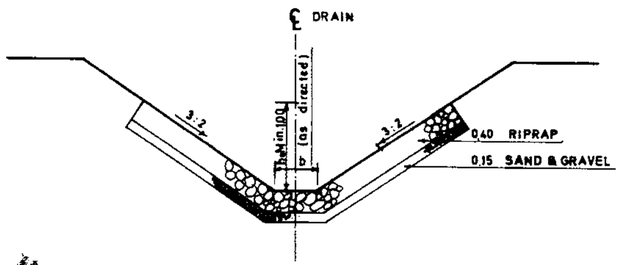

SECTION B-B

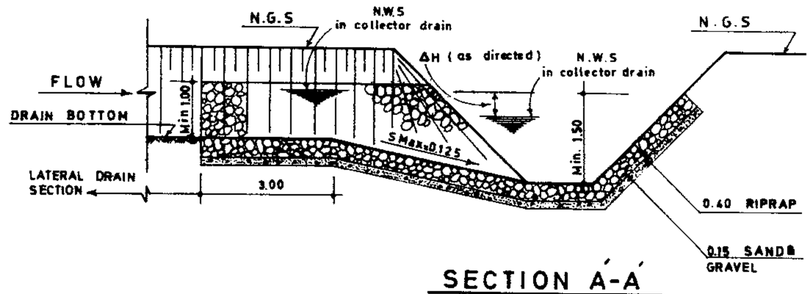

SECTION A´-A´

REFERENCE DWGS:

Scale: N.T.S	IRRIGATION & DRAINAGE STANDARDS		
Date:	DWG Nº	13/13/1/01	RIPRAP INCLINED DROP AND PROTECTION IN INTERSECTION OF COLLECTOR DRAIN WITH LATERAL DRAIN
Approved:	Sheet Nº 1 of 1	Rev. Nº	

ISLAMIC REPUBLIC OF IRAN
PLAN & BUDJET ORGANIZATION
TECNICAL RESEARCH AND STANDARD BUREAU

@omoorepeyman.ir

STRUCTURE DESCRIPTION

Side spillway is a protective structure which protect the canal system and adjacent property from damage, which would result from uncontrolled storm runoff or drainage water, or an uncontrolled excess of flow within the canal. Side spillway and its wasteway, is also used to empty the canal for inspection, maintenance, seasonal shutdown or an emergency such as a canal bank failure.

STRUCTURE COMPONENTS

Side spillway consists of the following hydraulic elements:

- Wasteway inlet which is usually an overflow structure.
- Wasteway turnout gate for drainage of the canal.
- Pool
- Pipe
- Transition
- Wasteway channel

APPLICATION

Side channel spillway are located along the canal bank with the spillway crest parallel to the canal alinement. As the canal water surface rises above the crest, the excess water is automatically discharged into a side channel. This structure is used in conjuction with a slide gate which provides for complete drainage of the canal. The following plan shows the location of entring excess water into the canal as well as the location of side spillway channel.

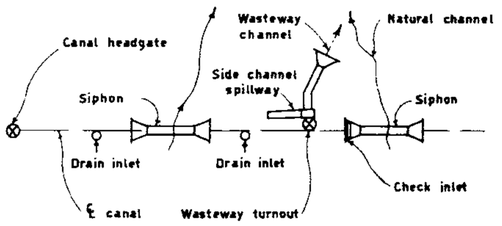

DESIGN PROCEDURE

Step 1

Collect the hydraulic properties of the canal which a side channel spillway is subject to design.

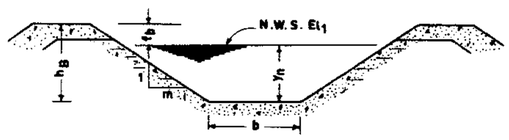

let:

Q_1 = Canal flow (m^3/s)

y_n = Canal normal water depth (m.)

f_b = Canal freeboard as shown (m.)

Q_2 = The excess flow subject to be spilled (m^3/s)

El_1 = Elevation of normal water surface

Step 2

Set spillway crest, calculate required head and crest length.

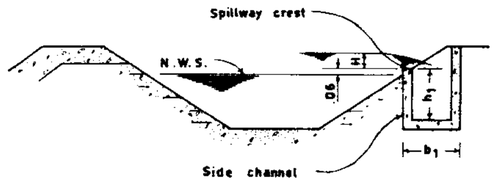

2-1 Set spillway crest 0.06 m. above NWS.

2-2 Calculate maximum head (H) on the spillway crest allowing 50% encroachment on normal canal bank freeboard.

$$H = 0.5\, f_b - 0.06$$

2-3 Calculate required crest length (L_c) from the standard suppressed rectangular weir formula for the excess water (Q_2)

$$L_c = \frac{Q_2}{1.838\, H^{1.5}}$$

Step 3

Design side channel:

Side channel has a rectangular cross section. The width, depth and slope should be adequate to provide freeflow while carrying weed, trash or ice load.

A reasonable width should vary uniformly from 0.6 m. at the upstream end to 1.2 m. at the downstream end, except that a downstream width of 0.9 m. is sufficient for discharge less than 1.4 m^3/s

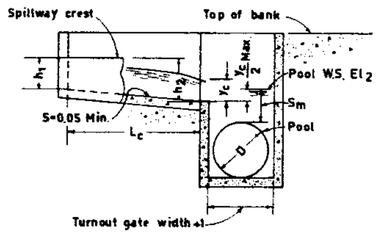

Set: Upstream end bottom width = $b_1 = 0.60$ m.
and, downstream end bottom width = $b_2 = 1.20$ m.
if $Q_2 \leq 1.4$ m^3/s set: $b_2 = 0.90$ m.

let:

q_2 = Unit flow at the downstream end.

y_c = Critical water depth at the downstrean end.

then:

$$q_2 = \frac{Q_2}{b_2} \qquad h_2 = 1.5\, y_c + 0.3$$

$$y_c = 0.467\, q_2^{2/3} \qquad h_1 = h_2 - 0.05\, L_c$$

Y/D	K_A	K_P	K_C
.01	.00133	.00005	.00054
.02	.00375	.00021	.00136
.03	.00687	.00050	.00305
.04	.01054	.00093	.00541
.05	.01468	.00150	.00844
.06	.01924	.00221	.01213
.07	.02417	.00306	.01647
.08	.02944	.00407	.02147
.09	.03501	.00521	.02713
.10	.04088	.00651	.03341
.11	.04701	.00795	.04034
.12	.05339	.00953	.04789
.13	.06000	.01126	.05607
.14	.06683	.01314	.06485
.15	.07387	.01515	.07421
.16	.08111	.01731	.08418
.17	.08854	.01960	.09473
.18	.09613	.02203	.10587
.19	.10390	.02460	.11758
.20	.11182	.02729	.12985
.21	.11990	.03012	.14269
.22	.12811	.03308	.15608
.23	.13647	.03616	.17003
.24	.14494	.03937	.18454
.25	.15355	.04270	.19960
.26	.16226	.04615	.21521

Y/D	K_A	K_P	K_C
.27	.17109	.04970	.23138
.28	.18002	.05337	.25241
.29	.18905	.05715	.27020
.30	.19817	.06104	.28856
.31	.20738	.06503	.30749
.32	.21667	.06912	.32698
.33	.22603	.07330	.34702
.34	.23547	.07758	.36762
.35	.24498	.08195	.38877
.36	.25455	.08641	.41047
.37	.26418	.09095	.43272
.38	.27386	.09557	.45551
.39	.28359	.10027	.47884
.40	.29337	.10503	.50271
.41	.30319	.10987	.52711
.42	.31304	.11477	.55205
.43	.32293	.11973	.57752
.44	.33284	.12475	.60352
.45	.34278	.12983	.63006
.46	.35274	.13495	.65712
.47	.36272	.14011	.68471
.48	.37270	.14532	.71282
.49	.38270	.15057	.74147
.50	.39270	.15584	.77064
.51	.40270	.16115	.80034
.52	.41269	.16648	.83057
.53	.42268	.17182	.86133
.54	.43266	.17719	.89263
.55	.44262	.18256	.92447
.56	.45255	.18794	.95685
.57	.46247	.19331	.98977
.58	.47236	.19869	1.02325
.59	.48221	.20405	1.05728
.60	.49203	.20940	1.09189
.61	.50181	.21473	1.12707
.62	.51154	.22004	1.16283
.63	.52122	.22532	1.19920
.64	.53085	.23056	1.23617
.65	.54042	.23576	1.27378
.66	.54992	.24092	1.31203
.67	.55936	.24602	1.35095
.68	.56873	.25106	1.39057
.69	.57802	.25604	1.43090
.70	.58723	.26095	1.47198
.71	.59635	.26579	1.51385
.72	.60538	.27054	1.55656
.73	.61431	.27520	1.60013
.74	.62313	.27976	1.64460
.75	.63185	.28422	1.69002
.76	.64045	.28856	1.73668
.77	.64893	.29279	1.78479
.78	.65728	.29689	1.83335
.79	.66550	.30085	1.88368
.80	.67357	.30466	1.93550
.81	.68150	.30832	1.98899
.82	.68926	.31181	2.04433
.83	.69686	.31513	2.10177
.84	.70429	.31825	2.16157
.85	.71152	.32117	2.22409
.86	.71856	.32388	2.28975
.87	.72540	.32635	2.35909
.88	.73201	.32858	2.43281
.89	.73839	.33053	2.51177
.90	.74452	.33219	2.59718
.91	.75039	.33354	2.69062
.92	.75596	.33452	2.79432
.93	.76123	.33512	2.91155
.94	.76616	.33527	3.04711
.95	.77072	.33491	3.20911
.96	.77486	.33393	3.41191
.97	.77853	.33218	3.68288
.98	.78165	.32936	4.08478
.99	.78407	.32476	4.87350

REFERENCE DWGS:

Scale:	IRRIGATION & DRAINAGE STANDARDS	
Date:	DWG. No 13/12/4/01	Side channel spillway with slide gate
Approved:	Sheet No. 1 of 3 Rev. No.	

ISLAMIC REPUBLIC OF IRAN
MINISTRY OF PLAN & BUDJET
TECHNICAL RESEARCH AND STANDARD BUREAU

@omoorepeyman.ir

Step 4

4-1 Determine wasteway turnout gate size and head for normal canal flow (Q_1)

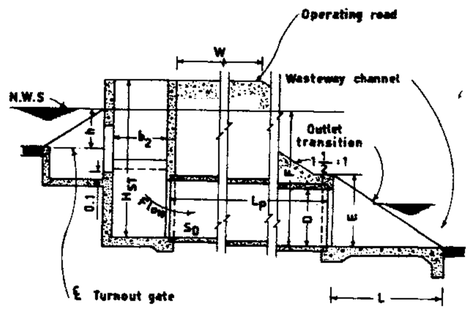

let:

V = Max. gate velocity (m/s): Max. 3 m/s

A_g= Gate area (m^2)

h = Gate head (m)

Set the centerline of gate at canal invert elevation; so: $h = y_n$

then,

$$V = C\sqrt{2gh} \qquad \text{where: } C=0.6$$

if $V \leq 3$ m/s then $A=\frac{Q_1}{V}$ goto 4.2

otherwise set: V = 3 m/s then,

$$A_g = \frac{Q_1}{V} \quad \text{and} \quad h = \frac{Q_1^2}{2g A^2 C^2}$$

4-2 Select the gate size based on A,h from the standard gates.

Step 5

Set elevation of pool water surface.

let:

El_2 = Elevation of pool water surface.

Calculate El_2:

$$El_2 = El_1 + 0.06 - h_1 - 0.05L_c + 0.5y_c$$

Or:

$$El_2 = El_1 - h$$

Select whichever resulted lower pool water surface

Step 6

Determine pipe diameter and crown submergence for the normal canal capacity (Q_1) plus the excess water (Q_2):

$$Q_3 = Q_1 + Q_2$$

set pipe velocity, $V_p = 3$ m/s

Pipe area: $A_p = \frac{Q_3}{V_p}$

Calculated pipe dia. : $D_1 = \sqrt{\frac{4A}{\pi}}$

Select pipe diameter (D) from the standard pipes (D).

Recalculate : $A_p = \frac{\pi D^2}{4}$

$$V_p = \frac{Q_3}{A_p}$$

$$h_{V_p} = \frac{V_p^2}{2g}$$

6-1 Set pipe crown 1.5 h_{V_p} below the pool water surface.

6-2 Submergence, $S_m = 1.5\ h_{V_p}$

6-3 Set pipe invert on a slope of $S_0 = .001$

Step 7

Find structure height (H_{ST})

$$H_{ST} = D + S_m + (El_1 - El_2) + f_b$$

Step 8

Select outlet transition type 2 and read E and L base on the selected pipe diameter.

Step 9

Determine pipe length (L_p)

let:

W = Width of operating road.

$L_p = W + 1.5(H_{ST} - E) + 0.3$

Step 10

Select type of protection for inlet and outlet.

Step 11

Check the percolation path.

Step 12

Check the effect of downstream water surface to pipe hydraulic properties.

12-1 Collect the hydraulic properties of wasteway channel.

let:

Q_{max} = Wasteway channel flow=$Q_1+Q_2 = Q_3$

Y_4 = Depth of water for Q_{max}

V_4 = Wasteway water velocity

h_{V_4} = Velocity head = $\frac{V_4^2}{2g}$

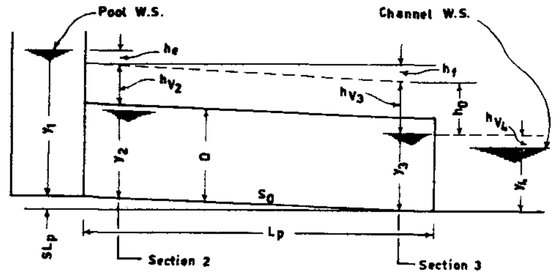

12-2 Calculate specific energy in wasteway channel:

$$E_4 = d_4 + h_{V_4}$$

12-3 Compute pipe flow at critical flow:

- Calculate $K_c = \frac{Q_{max}}{D^{5/2}}$
- From the table find the value of K_c Close to calculated K_c and read: $\frac{Y_c}{D}$ and K_p , K_A
- Set $\frac{Y_c}{D} = K_c$ and compute Y_c
- Set $\frac{A_c}{D^2} = K_A$ and compute A_c
- Compute $V_c = \frac{Q_{max}}{A_c}$, $h_{V_c} = \frac{V_c^2}{2g}$
- Calculate maximum specific energy at the critical condition (E_c):

$$E_c = Y_c + h_{V_c}$$

- Calculate the critical slope.
- Set $\frac{Q_n}{D^{8/3} S_c^{1/2}} = K_p$ and calculate S_c for n = 0.013

12-4 Check the pipe slope:

S_c should be $> S_0$

12-5 Compute energy required at section 3:

$$E_3 = E_4 + 0.8(h_{V_c} - h_{V_4})$$

12-6 Check E_3 should be $< E_c$

Otherwise the wasteway channel shall control the pipe flow.

The excess energy = $E_c - E_3$

If the value of $(E_c - E_3)$ is small, an energy dissipator is not required otherwise, an energy dissipator should be considered.

12-7 Compute energy at section 2:

$$E_2 + S_0 L_p = E_c + h_f$$

$$h_f = L_p\left(\frac{S_2 + S_c}{2}\right)$$

by try and error find y_2 in order to satisfies the above equality.

- Assume a value to y_2 which should be greater than y_c .
- Compute the ratio of $\frac{y_c}{D}$ and through the table read K_A and K_p .
- By using the equation $K_p = \frac{Q_n}{D^{8/3} S_2^{1/2}}$ and $\frac{A_2}{D^2} = K_A$ compute S_2 and A_2 .
- Compute $V_2 = \frac{Q_{max}}{A_2}$ and $h_{V_2} = \frac{V_2^2}{2g}$
- Insert the values to the following Bernolli equation:

$$y_2 + h_{V_2} + S_0 L_p = E_c + L_p\left(\frac{S_2 + S_c}{2}\right)$$

If the value of y_2 satisfied the above equation then, calculate:

$E_2 = y_2 + h_{V_2}$ otherwise change the value of y_2 and try it again.

12-8 Compute specific energy at section 1 (E_1) and check the pipe submergence.

- Assume zero velocity in the pool.
- Assume pipe entrance loss, $h_e = 0.5\ h_{V_2}$
- $E_1 = E_2 + h_e$ and $y_1 = E_1$
- $S_m = y_1 - D$

@moorepeyman.ir

REFERENCE DWGS:

Scale:	IRRIGATION & DRAINAGE STANDARDS		ISLAMIC REPUBLIC OF IRAN MINISTRY OF PLAN & BUDJET TECHNICAL RESEARCH AND STANDARD BUREAU
Date:	DWG. No 13/12/4/02	Side channel spillway with slide gate	
Approved:	Sheet No 2 of 3 | Rev No		

DESIGN EXAMPLE

Step 1

Let:

Q_1 = 2.00 m^3/s

y_n = 0.90 m

f_b = 0.60 m

Q_2 = 0.50 m^3/s

El_1= 212.65 m from sea level.

Step 2

2-1 Elevation of spillway crest:
212.65+0.06=212.71

2-2 $H=0.5xf_b-0.06=0.5x0.6-0.06=0.24$ m.

2-3 $L_c=\frac{Q_2}{1.838H^{1.5}}=\frac{0.5}{1.838\times(0.24)^{1.5}}=2.31$ m.

Set L_c = 2.5 m.

Step 3

As $Q_2 = 0.5 < 1.4$ m^3/s

then:

b_2=0.9m. and b_1=0.6 m.

$q_2=\frac{Q_2}{b_2}=\frac{0.5}{0.9}=0.556$

$y_2=0.467q_2^{2/3}=0.467x(0.556)^{2/3}=0.32$ m.

$h_2=1.5y_c+0.3=1.5x0.32+0.3=0.78$ m.

$h_1=h_2-0.05L_c=0.78-0.05x2.5=0.65$ m.

Step 4

4-1 Set $h=y_n=0.9$ m.

$V=0.6\sqrt{2x9.81x0.9}=2.52$ m/s

As $V=2.52 < 3$ m/s then:

$A_g=\frac{Q_1}{V}=\frac{2}{2.52}=0.794$ m^2

4-2 Select gate width=1.00 m and Height=0.80 m. from gate standard presented at check structure structure drawing(Dwg.No.12/1/1/01).

then:

Gate area A_g = 1.00x0.8= 0.8 m^2

Step 5

$El_2=El_1+0.06-h_1-0.05L_c+0.5y_c$

$=212.65+0.06-0.65-0.05x2.5+0.5x0.32$

$=212.10$

Or:

$El_2=El_1-h=212.65-0.9=211.75$

Select El_2=211.75 because 211.75 gives the lower pool water surface.

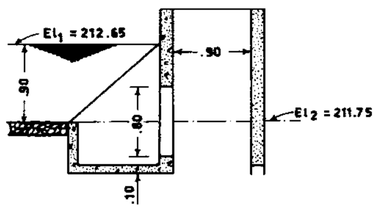

Step 6

$Q_3=Q_1+Q_2=2.00+0.5=2.5$ m^3/s

let V_p = 3 m/s

Pipe area $A_p=\frac{Q_3}{V_p}=\frac{2.5}{3}=0.833$ m^2

Pipe dia. $D_1=\sqrt{\frac{4A}{\pi}}=\sqrt{\frac{4x0.833}{3.1416}}=1.03$ m.

As far as pipe diameter 1000 mm. gives velocity more than 3 m/s so select pipe diameter D=1200 mm.

D = 1.2 m.

$A_p=\frac{\pi D^2}{4}=\frac{3.1416x(1.2)^2}{4}=1.131$ m^2

$V_p=\frac{Q_3}{A_p}=\frac{2.5}{1.131}=2.21$ m/s

$h_{V_p}=\frac{V_p^2}{2g}=0.25$ m.

6-1 Elevation of pipe crown= $El_2-1.5h_{V_p}$
= 211.75-1.5x0.25=211.38 m.

6-2 Pipe submergence, $S_m=1.5h_p=1.5x0.25=0.38$

6-3 Set S_0= 0.001

Step 7

$H_{ST}=D+S_m+(El_1-El_2)+f_b$

$=1.2+0.38+(212.65-211.75)+0.6$

$=3.08$ m.

Step 8

From type transition table :

E = 1.80 m. L = 2.75 m.

Step 9

Let W = Width of operating road = 4 m.

L_p= W+1.5(H_{ST} - E)+0.3

= 4+1.5(3.08-1.8)+0.3=6.22 m.

Set L_p = 6.5 m.

Step 12

12-1 The following hydraulic data collected for the wasteway channel:

$Q_{max}=Q_3=2.5$ m^3/s

d_4 = 0.85 m.

V_4 = 1.2 m/s

$h_{V_4}=\frac{(V_4)^2}{2g}=\frac{(1.2)^2}{2x9.81}=0.07$ m.

12-2 $E_4=y_4+h_{V_4}=0.85+0.07=0.92$ m.

12-3 $K_c=\frac{Q_{max}}{D^{5/2}}=\frac{2.5}{(1.2)^{5/2}}=1.58485$

From the table and by interpolation:

$\frac{Y_c}{D}=0.72+\frac{1.58485-1.55655}{1.60012-1.55655}x0.01=0.7265$

$K_A=0.60538+\frac{0.61431-0.60538}{0.01}x(0.7265-0.72)=0.61118$

$K_p=0.27054+\frac{0.27520-0.27054}{0.01}x(0.7265-0.72)=0.27357$

$y_c=0.7265\times1.2=0.872$

$A_c=0.61118x(1.2)^2=0.880$

$V_c=\frac{Q_{max}}{A_c}=\frac{2.5}{0.880}=2.84$ m/s

$h_{V_c}=\frac{(V_c)^2}{2g}=\frac{(2.84)^2}{2x9.81}=0.41$ m.

$E_c=Y_c+h_{V_c}=0.88+0.41=1.29$ m.

$K_p=\frac{Q_n}{D^{8/3}S_c^{1/2}}$ Or: $S_c=(\frac{Q_n}{K_pD^{8/3}})^2$

$S_c=(\frac{2.5\times0.013}{0.27357x(1.2)^{8/3}})^2=0.00533$

12-4 $S_c=0.00533 > S_0=0.001$ satisfied.

12-5 $E_3=E_4+0.8(h_{V_c}-h_{V_4})$
$=0.92+0.8(0.41-0.07)=1.19$ m.

12-6 $E_3=1.19 < E_c=1.29$ satisfied.

Excess energy = E_c-E_3 = 1.29 - 1.19 = 0.1 is small so energy dissipator is not required.

12-7 $E_2+S_0L_p=E_c+h_f$

Or:

$E_2-h_f=E_c-S_0L_p=1.29-0.001x6.5=1.28$ m.

Assume y_2 = 0.95

$\frac{y_2}{D}=\frac{0.95}{1.2}=0.79$

From table read K_A=0.6655

K_p=0.30085

$K_p=0.30085=\frac{Q_n}{D^{8/3}S_2^{1/2}}=\frac{2.5\times0.013}{(1.2)^{8/3}x\,S_2^{1/2}}$

$S_2=(\frac{2.5\times0.013}{0.30085x(1.2)^{8/3}})^2=0.00441$

$K_A=0.6655=\frac{A_2}{D^2}=\frac{A_2}{(1.2)^2}$

$A_2=0.9583$ m^2

$V_2=\frac{Q_{max}}{A_2}=\frac{2.5}{0.9583}=2.61$ m/s

$h_{V_2}=\frac{(V_2)^2}{2g}=\frac{(2.61)^2}{2\times9.81}=0.35$

Bernolli equation:

$y_2+h_{V_2}+S_0L_p=E_C+L_p(\frac{S_2+S_c}{2})$

$0.95+0.35+0.001x6.5=1.29+6.5(\frac{0.00441+0.00533}{2})$

1.307 # 1.322

Assume y_2 = 1.00

$\frac{y_2}{D}=\frac{1}{1.2}=0.83$

$K_A=0.69686$ $K_p=0.31513$

$S_2=(\frac{2.5\times0.013}{0.31513x(1.2)^{8/3}})^2=0.00402$

$A_2=0.69686x(1.2)^2=1.0035$

$V_2=\frac{2.5}{1.0035}=2.49$ $h_{V_2}=\frac{(2.49)^2}{2\times9.81}=0.32$

$1.00+.32+.001x65=1.29+6.5(\frac{.00402+.00533}{2})$

1.327 # 1.320

As 1.327 is close to 1.320 then: y_2=1.00

$E_2=y_2+h_{V_2}=1.00+0.32=1.32$

12-8 $E_1=E_2+h_e=E_2+0.5h_{V_2}$

$=1.32+0.5x0.32=1.48$

$y_1=E_1=1.48$

$S_m=y_1-D=1.48-1.20=0.28$

REFERENCE DWGS:

Scale:	IRRIGATION & DRAINAGE STANDARDS		ISLAMIC REPUBLIC OF IRAN MINISTRY OF PLAN & BUDJET TECHNICAL RESEARCH AND STANDARD BUREAU
Date:	DWG No 13/12/4/03	Side channel spillway with slide gate	
Approved:	Sheet No 3of 3 | Rev. No		

@omoorepeyman.ir

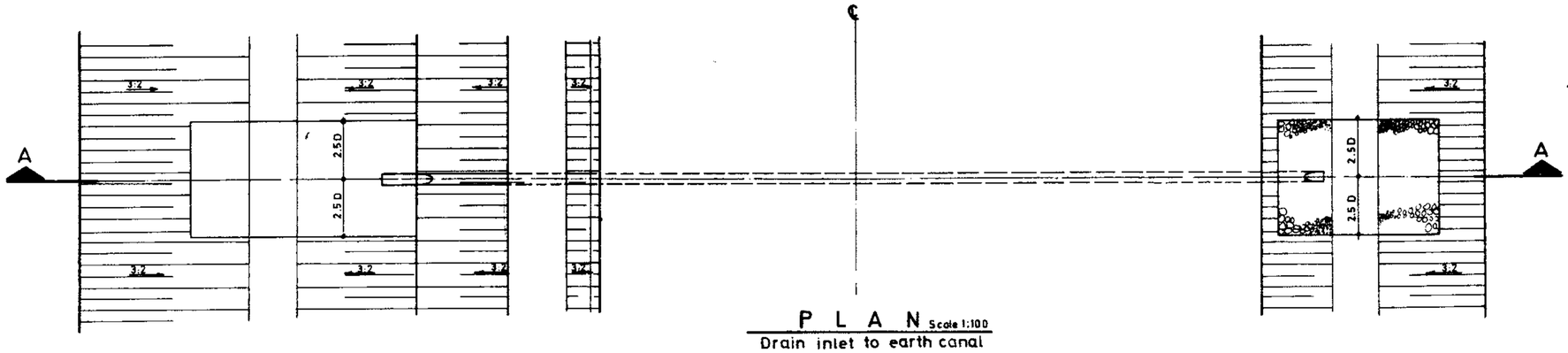

PLAN Scale 1:100
Drain inlet to earth canal

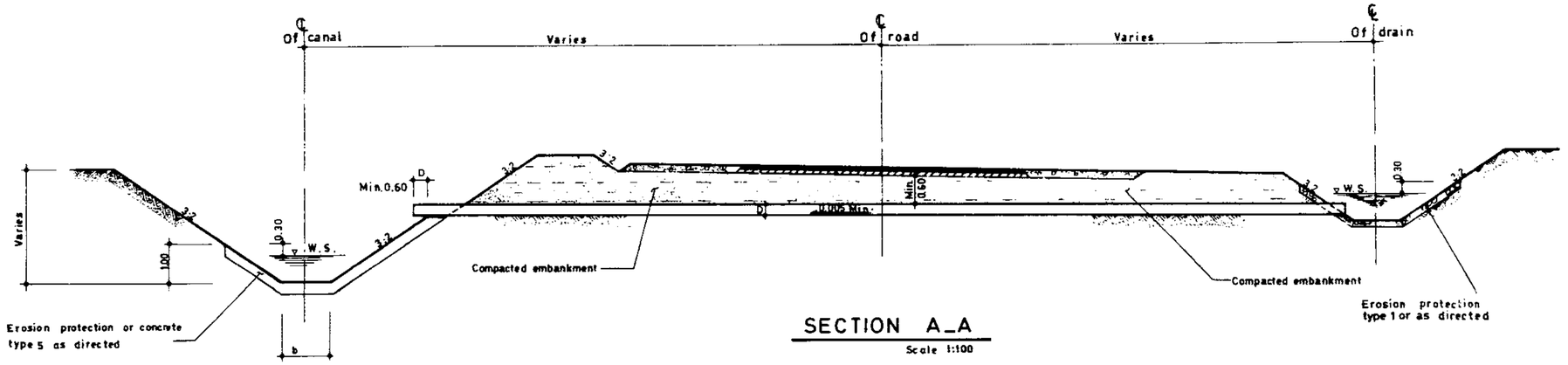

SECTION A_A
Scale 1:100

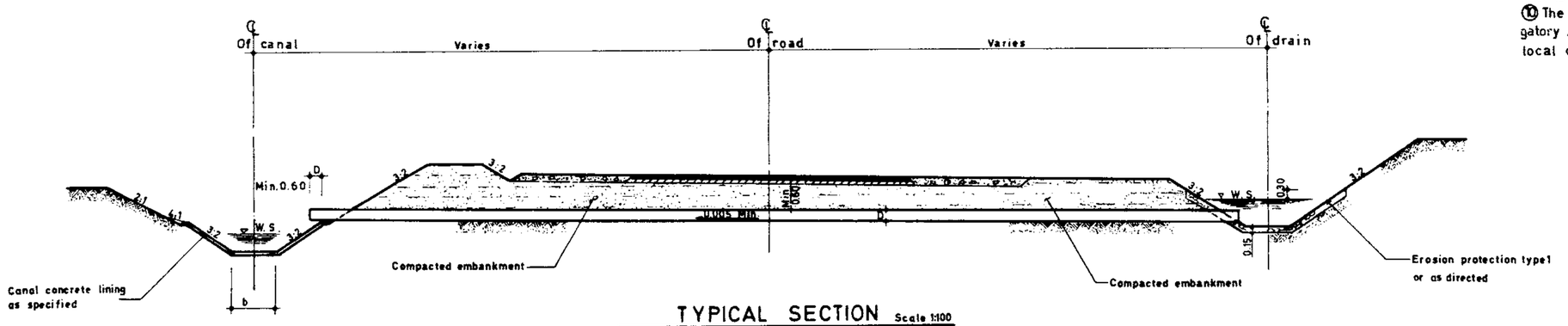

TYPICAL SECTION Scale 1:100
Drain inlet to concrete lined canal

NOTES:

① Drain inlets are structures used to carry relatively small amounts of storm run-off or drainage water into the canal
② The drain inlet may be located in a natural drainage channel or at the terminal end of an inteceptor drain which parallels the canal. As the inlet end must be above the canal watersurface, the drain inlet is best suited where the canal prism is below the original ground surface.
③ A pipe section is generally used where the design flow is small, and it is therefore the type most commonly used. Use of pipe section is desirable if an operating road crosses the drain inlet.
④ Drain inlets should be designed to accommodate the storm run-off from the drainage area, based upon the design storm frequency (usually 25 years).
⑤ Where overflow wasteway facilities are not provided for a reach of canal, the total design capacity of all drain inlets within that reach should be limited to 10% of the normal design capacity of the canal.
⑥ Where an overflow wasteway facility is provided, the design capacity of an individual drain inlet should not exceed 10% of the cumulative in flows from all drain inlets within that reach should not exceed 20% of the normal design capacity of the canal.
⑦ Earth inlet transitions are usually satisfactory for drain inlets. If a particular situation requires a concrete transition its type should be determined on the basin of the cendi-tions discussed in dwgs.№13/7/1/01 or 13/9/1/01_13/11/1/01
⑧ To prevent degradation of the inlet channel and to provide complete drainage of the channel the pipe invert (assuming an earth transition) should be set at or slightly below the original ground surface of the channel invert. The invert must be preferably 15cm. but at least 10cm. above the normal water surface in an earth canal or 3cm. above the maximum water surface.
⑨ The pipe diameter should be determined on the basis of a maximum full pipe velocity of 3 m./s. if a concrete inlet is used and 1.5 m./s. if an earth transition is used.
⑩ The road dimensions shown on this dwg. are not obligatory and could be changed or revised with respect to local or project conditions.

REFERENCE DWG :
For erosion protection see dwgs. no. 13/4/1/01

Scale: 1:100	IRRIGATION & DRAINAGE STANDARDS		
Date:	DWG. № 13/11/1/01		DRAIN INLETS
Approved	Sheet № 1 of 1	Rev. №	

ISLAMIC REPUBLIC OF IRAN
MINISTRY OF PLAN & BUDJET
TECHNICAL RESEARCH AND STANDARD BUREAU

omoorepeyman.ir

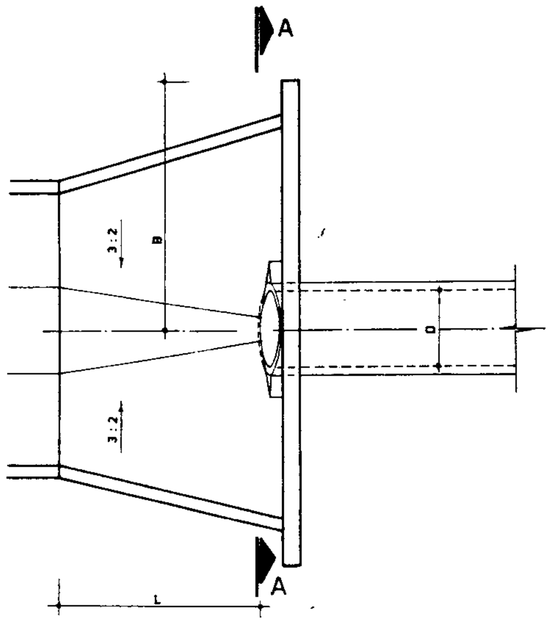

PLAN OF INLET

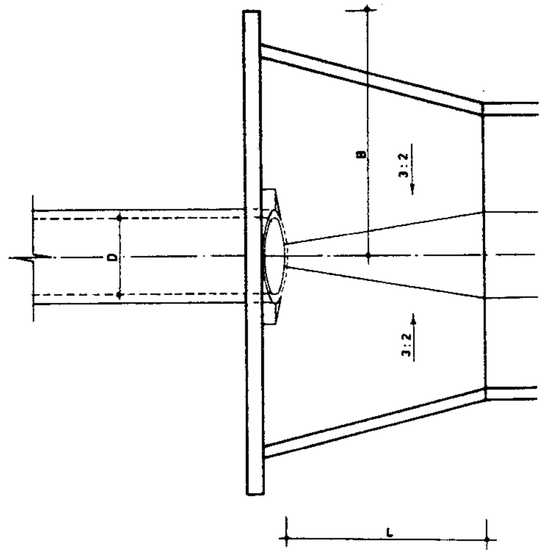

PLAN OF OUTLET

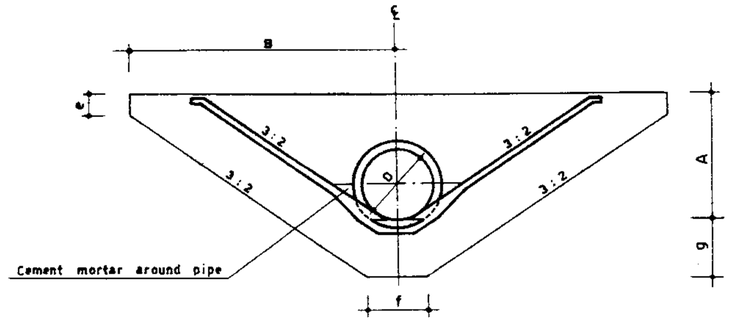

SECTION A–A

Dia	L	X	A	B	e	f	g	C	
								Inlet	Outlet
0.30	1.50	0.10	1.10	2.45	0.30	0.35	0.60	0.60	0.40
0.40	1.50	0.13	1.20	2.65	0.30	0.40	0.60	0.70	0.55
0.45	1.50	0.15	1.25	2.75	0.30	0.425	0.60	0.75	0.60
0.50	1.60	0.17	1.30	2.85	0.30	0.45	0.60	0.80	0.70
0.60	1.80	0.17	1.40	3.05	0.30	0.50	0.60	0.90	0.80
0.70	2.10	0.20	1.50	3.25	0.50	0.55	0.80	1.00	0.95
0.80	2.40	0.24	1.60	3.45	0.50	0.60	0.80	1.10	1.10
0.90	2.70	0.27	1.70	3.65	0.50	0.65	0.80	1.20	1.20
1.00	3.00	0.30	1.80	3.85	0.50	0.70	0.80	1.30	1.30

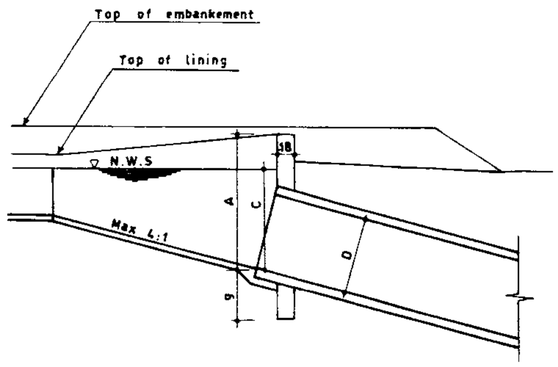

LONGITUDINAL SECTION

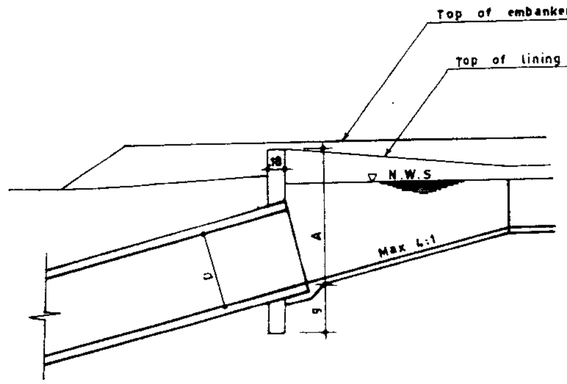

LONGITUDINAL SECTION

REFERENCE DWG :

Scale : N.T.S	IRRIGATION DRAINAGE STANDARDS		
Date :	DWG Nº 13/10/1/01		CONCRETE TRANSITION (TYPE 5) PLAN & SECTION
Approved:	Sheet Nº 1 of 1	Rev. Nº:	

ISLAMIC REPUBLIC OF IRAN
MINISTRY OF PLAN & BUDJE
TECHNICAL RESEARCH AND STANDARD BUREAU

omoorepeyman.ir

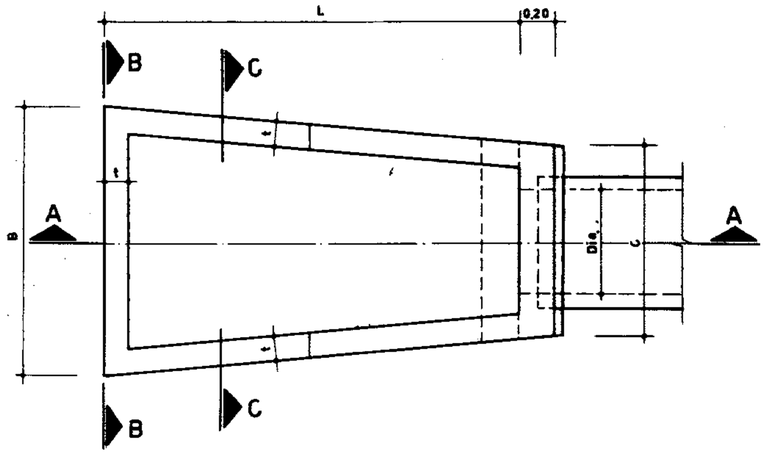

PLAN

Sloped type 4 Scale 1:25

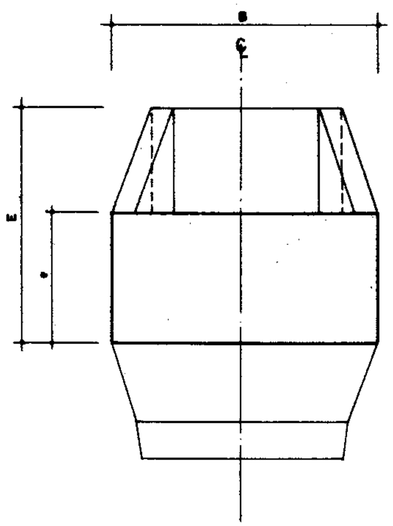

SECTION B-B

Scale 1:25

DIMENSION TABLE

Dia.	B	C	E	L	S	T	e	t	R/Bar. Kg.	Conc. m^3	Form m^2
0.60	1.55	1.10	1.20	2.40	0.10	0.15	0.60	0.15	158.78	1.95	15.19
0.70	1.80	1.20	1.30	2.60	0.15	0.20	0.60	0.15	192,96	2.29	18,09
0.80	2.00	1.35	1.40	2.80	0.15	0.20	0.60	0.15	218,80	2.80	20,68
0.90	2.30	1.45	1.50	3.00	0.20	0.20	0.60	0.15	251,23	3,04	23.73
1.00	2.75	1.55	1.60	3.20	0.20	0.20	0.75	0.15	292,93	4,00	28,21
1.20	3.25	1.80	1.80	3.60	0,20	0.20	0.75	0,18	356,60	5.10	34.61
1.40	3.80	2.05	2.00	4.00	0.20	0.20	0.75	0.18	436,96	6.29	41,89

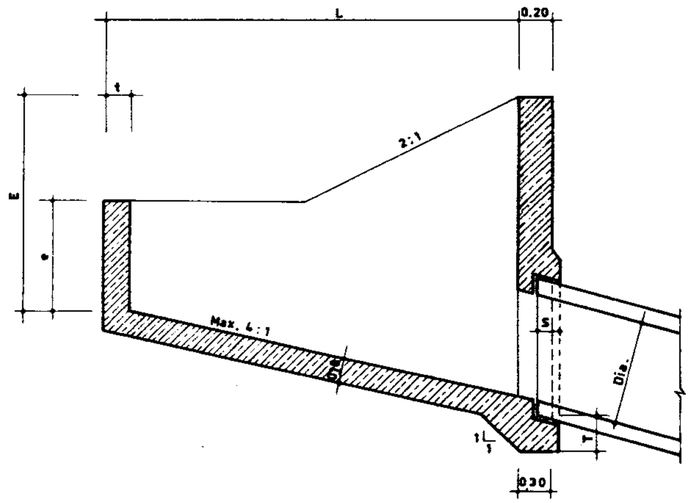

SECTION A-A

Sloped type 4 Scale 1:25

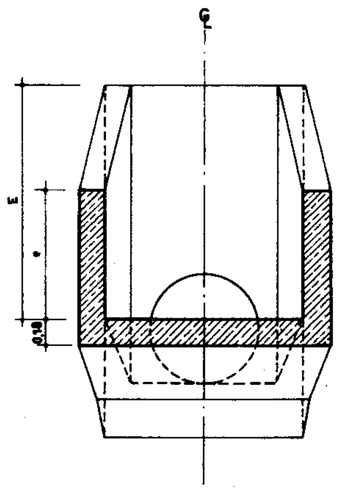

SECTION C-C

Scale 1:25

NOTES

(1) Dimensions in the table are for the pipe diameters sized for a full pipe flow velocity of 3.5 m/s with a free flow pipe inlet.
(2) The dimension provide control at inlet headwalls for design capacity and free flow pipe.
(3) To prevent degradation at the inlet the top of the inlet wall is placed at or near existing ground surface.
(4) A maximum full pipe flow velocity of 3.5 m/s is permitted for cross drainage culvert structures having baffled outlets or stlling pools.

REFERENCE DWGS: For general notes see dwgs № 20/2/1/01 to 20/2/1/03
For reinforcement see dwg. № 13/9/3/01
For detail of pipe connection to structure see dwgs. №17/1/1/01 to 17/1/1/03

Scale: 1:25	IRRIGATION & DRAINAGE STANDARDS	
Date:	DWG № 13/9/1/01	CONCRETE TRANSITION (TYPE 4) PLAN & SECTION
Approved:	Sheet № 1 of 3 Rev. №	

ISLAMIC REPUBLIC OF IRAN
MINISTRY OF PLAN & BUDJET
TECHNICAL RESEARCH AND STANDARD BUREAU

@omoorepeyman.ir

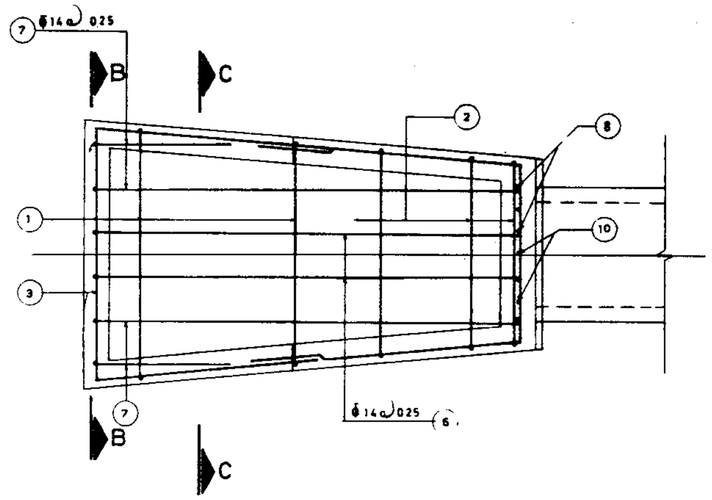

PLAN
Scale 1:25

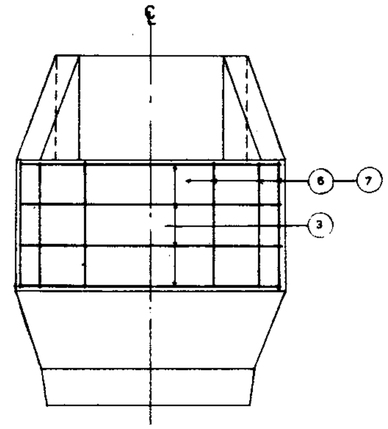

SECTION B-B
Scale 1:25

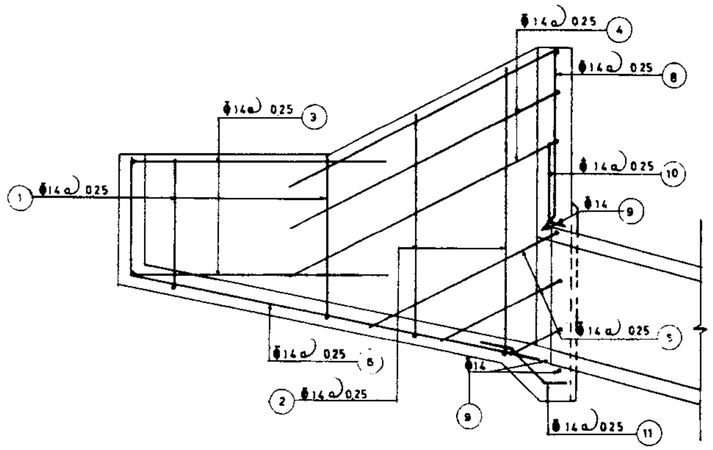

SECTION A-A
Scale 1:25

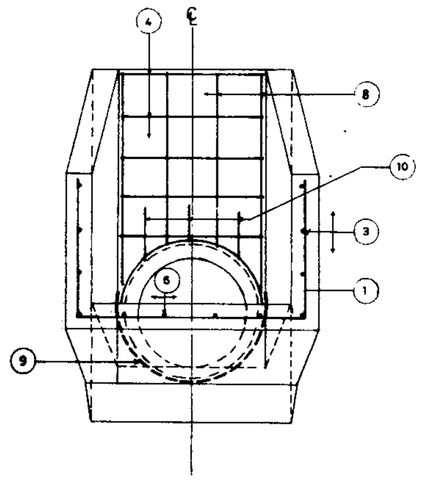

SECTION C-C
Scale 1:25

@omoorepeyman.ir

REFERENCE DWGS: For Plan & Section see dwg. Nº 13/9/1/01
For list of reinforcement see dwg. Nº 13/9/3/02

Scale: 1:25	IRRIGATION & DRAINAGE STANDARDS		ISLAMIC REPUBLIC OF IRAN MINISTRY OF PLAN & BUDJET TECHNICAL RESEARCH AND STANDARD BUREAU
Date:	DWG. Nº 13/9/3/01	CONCRETE TRANSITION (TYPE 4) REINFORCEMENT PLAN & SECTION	
Approved:	Sheet Nº 2 of 3 | Rev. Nº		

Dia 0.60

POS	Nº.	FORM	UNIT LENG.	TOTAL LENG.
1	5	0.69 ~ 0.99 — 1.25 ~ 1.47 — 0.69 ~ 0.99	3.04	15.20
2	5	0.99 ~ 1.89 — 1.02 ~ 1.25 — 0.99 ~ 1.89	4.02	20.10
3	4	1.47 — 1.50	4.47	17.88
4	6	1.64 — 1.02	4.30	25.80
5	6	0.40 ~ 1.64 — 0.20 ~ 0.51	1.38	8.28
6	4	0.69 — 2.51	3.20	12.80
7	4	0.69 — 0.92 ~ 2.51	2.41	9.64
8	6	0.20 ~ 0.30 — 0.76 ~ 1.06	1.17	7.02
9	2	0.40 — 0.40	3.80	7.60
10	4	0.20 ~ 0.30 — 0.30 ~ 0.40	0.60	2.40
11	6	0.55 — 0.20	0.75	4.50
				131.22

131.22 x 1.21 = 158.78 Kg.

Dia 0.70

POS	Nº.	FORM	UNIT LENG.	TOTAL LENG.
1	5	0.69 ~ 0.99 — 1.44 ~ 1.72 — 0.69 ~ 0.99	3.26	16.30
2	7	0.99 ~ 2.04 — 1.12 ~ 1.44 — 0.99 ~ 2.04	4.31	30.17
3	4	1.72 — 1.50	4.72	18.88
4	6	1.87 — 1.12	4.86	29.16
5	8	0.40 ~ 1.87 — 0.20 ~ 0.56	1.52	12.16
6	4	0.69 — 2.72	3.41	13.64
7	6	0.69 — 0.98 ~ 2.72	2.54	15.24
8	6	0.20 ~ 0.30 — 0.83 ~ 1.16	1.25	7.50
9	2	0.40 — 0.40	4.16	8.32
10	6	0.20 ~ 0.30 — 0.30 ~ 0.40	0.60	3.60
11	6	0.55 — 0.20	0.75	4.50
				159.47

159.47 x 1.21 = 192.96 Kg.

Dia 0.80

POS	Nº.	FORM	UNIT LENG.	TOTAL LENG.
1	5	0.69 ~ 0.99 — 1.64 ~ 1.92 — 0.69 ~ 0.99	3.46	17.30
2	8	0.99 ~ 2.19 — 1.27 ~ 1.64 — 0.99 ~ 2.19	4.64	37.12
3	4	1.92 — 1.50	4.92	19.68
4	6	2.09 — 1.27	5.45	32.70
5	8	0.40 ~ 2.09 — 0.20 ~ 0.64	1.67	13.36
6	5	0.69 — 2.92	3.61	18.05
7	6	0.69 — 1.04 ~ 2.92	2.67	16.02
8	7	0.20 ~ 0.30 — 0.84 ~ 1.24	1.29	9.03
9	2	0.40 — 0.40	4.66	9.32
10	5	0.20 ~ 0.30 — 0.30 ~ 0.40	0.60	3.00
11	7	0.55 — 0.20	0.75	5.25
				180.83

180.83 x 1.21 = 218.80 Kg.

Dia 0.90

POS	Nº.	FORM	UNIT LENG.	TOTAL LENG.
1	5	0.69 ~ 0.99 — 1.88 ~ 2.22 — 0.69 ~ 0.99	3.73	18.65
2	9	0.99 ~ 2.34 — 1.37 ~ 1.88 — 0.99 ~ 2.34	4.96	44.64
3	4	2.22 — 1.50	5.22	20.88
4	6	2.31 — 1.37	5.99	35.94
5	10	0.40 ~ 2.31 — 0.20 ~ 0.69	1.80	18.00
6	5	0.69 — 3.13	3.82	19.10
7	6	0.69 — 1.10 ~ 3.13	2.81	16.86
8	7	0.20 ~ 0.30 — 0.89 ~ 1.34	1.37	9.59
9	3	0.40 — 0.40	5.04	15.12
10	6	0.20 ~ 0.30 — 0.30 ~ 0.40	0.60	3.60
11	7	0.55 — 0.20	0.75	5.25
				207.63

207.63 x 1.21 = 251.23 Kg.

Dia 1.00

POS	Nº.	FORM	UNIT LENG.	TOTAL LENG.
1	6	0.84 ~ 1.22 — 2.11 ~ 2.67 — 0.84 ~ 1.22	4.45	26.70
2	8	1.22 ~ 2.49 — 1.47 ~ 2.11 — 1.22 ~ 2.49	5.50	44.00
3	5	2.67 — 1.80	6.27	31.35
4	6	2.20 — 1.47	5.87	35.22
5	10	0.40 ~ 2.20 — 0.20 ~ 0.74	1.77	17.70
6	6	0.84 — 3.34	4.18	25.08
7	8	0.84 — 1.16 ~ 3.34	3.09	24.72
8	8	0.20 ~ 0.30 — 0.94 ~ 1.44	1.44	11.52
9	3	0.40 — 0.40	5.40	16.20
10	6	0.20 ~ 0.30 — 0.30 ~ 0.40	0.60	3.60
11	8	0.55 — 0.20	0.75	6.00
				242.09

242.09 x 1.21 = 292.93 Kg.

Dia 1.20

POS	Nº.	FORM	UNIT LENG.	TOTAL LENG.
1	6	0.84 ~ 1.22 — 2.57 ~ 3.17 — 0.84 ~ 1.22	4.93	29.58
2	10	1.22 ~ 2.79 — 1.72 ~ 2.57 — 1.22 ~ 2.79	6.16	61.60
3	5	3.17 — 1.80	6.77	33.85
4	6	2.65 — 1.72	7.02	42.12
5	12	0.40 ~ 2.65 — 0.20 ~ 0.89	2.06	24.72
6	7	0.84 — 3.75	4.59	32.13
7	8	0.84 — 1.28 ~ 3.75	3.36	26.88
8	9	0.20 ~ 0.30 — 1.00 ~ 1.62	1.56	14.04
9	3	0.40 — 0.40	6.28	18.84
10	7	0.20 ~ 0.30 — 0.30 ~ 0.40	0.60	4.20
11	9	0.55 — 0.20	0.75	6.75
				294.71

294.71 x 1.21 = 356.60 Kg.

Dia 1.40

POS	Nº.	FORM	UNIT LENG.	TOTAL LENG.
1	6	0.84 ~ 1.22 — 3.06 ~ 3.72 — 0.84 ~ 1.22	5.45	32.70
2	11	1.22 ~ 3.09 — 1.97 ~ 3.06 — 1.22 ~ 3.09	6.83	75.13
3	5	3.72 — 1.80	7.32	36.60
4	7	3.10 — 1.97	8.17	57.19
5	14	0.40 ~ 3.10 — 0.20 ~ 0.99	2.35	32.90
6	8	0.84 — 4.16	5.00	40.00
7	10	0.84 — 1.40 ~ 4.16	3.62	36.20
8	10	0.20 ~ 0.30 — 1.10 ~ 1.82	1.71	17.10
9	3	0.40 — 0.40	7.00	21.0
10	8	0.20 ~ 0.30 — 0.30 ~ 0.40	0.60	4.80
11	10	0.55 — 0.20	0.75	7.50
				361.12

361.12 x 1.21 = 436.96 Kg.

ALL BARS ARE Φ14 (1.21 Kg/m)

REFERENCE DWGS: For Reinforcement see dwg. Nº. 13/9/3/01

For bars with variable unit length see note under the same title at dwg. Nº: 20/2/1/01

Scale:	IRRIGATION & DRAINAGE STANDARDS		ISLAMIC REPUBLIC OF IRAN
Date:	DWG. Nº. 13/9/3/02	CONCRETE TRANSITION (TYPE 4) LIST OF REINFORCEMENT	MINISTRY OF PLAN & BUDJET
Approved:	Sheet Nº: 3 of 3	Rev Nº:	TECHNICAL RESEARCH AND STANDARD BUREAU

@omoorepeyman.ir

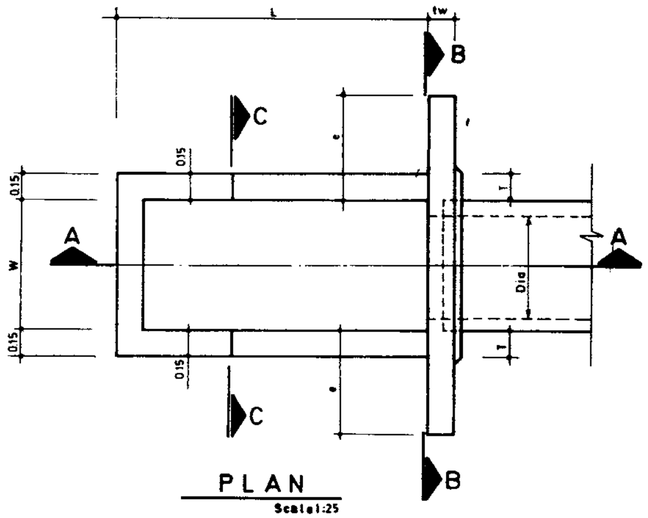

PLAN

Scale 1:25

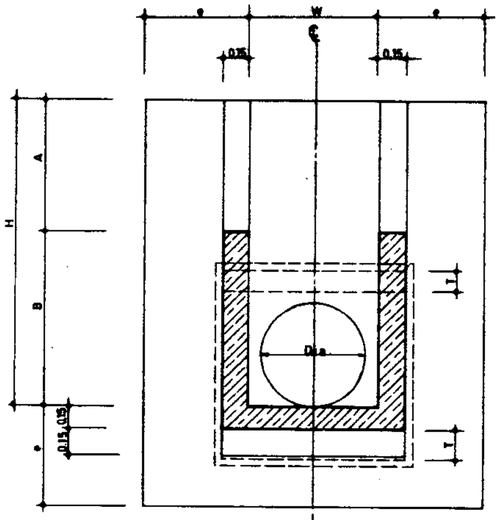

SECTION C-C

Scale 1:25

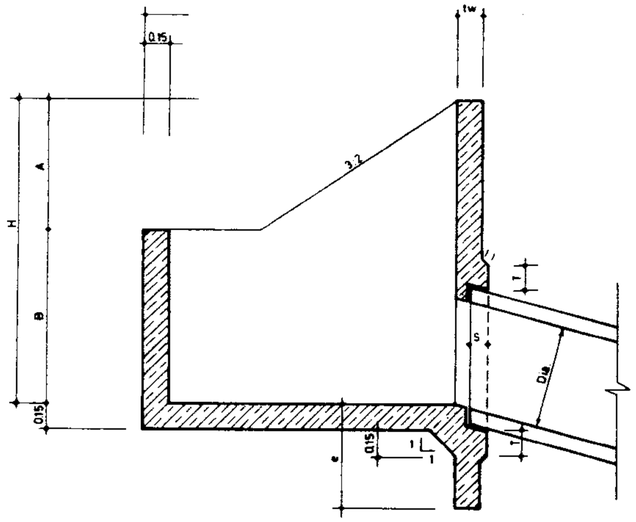

SECTION A-A

Scale 1:25

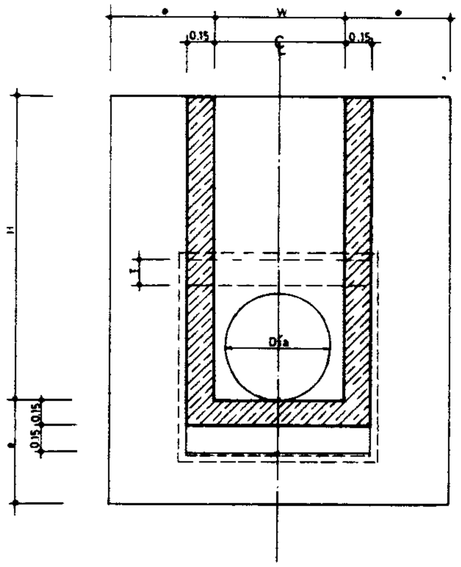

SECTION B-B

Scale 1:25

DIMENSION TABLE

STR. #	D	A	B	H	L	S	T	W	e	tw	R/Bar. Kg.	Conc. m^3	From.
600_1	0.60	0.75	0.45	1.20	1.80	0.10	0.15	0.80	0.60	0.15	122.31	2.88	13.34
600_2	0.60	0.75	0.60	1.35	1.80	0.10	0.15	0.80	0.60	0.15	135.40	3.39	15.20
600_3	0.60	0.75	0.75	1.50	1.80	0.10	0.15	0.80	0.60	0.15	143.89	3.76	17.10
600_4	0.60	0.75	1.00	1.75	1.80	0.10	0.15	0.80	0.60	0.15	163.42	4.48	20.26
700_1	0.70	0.75	0.90	1.65	2.10	0.15	0.20	0.90	0.60	0.15	172.26	4.42	20.73
700_2	0.70	0.75	1.10	1.85	2.10	0.15	0.20	0.90	0.60	0.15	199.19	5.04	23.59
800_1	0.80	0.90	0.60	1.50	2.40	0.15	0.20	1.00	0.75	0.20	184.68	4.72	21.08
800_2	0.80	0.90	0.90	1.80	2.40	0.15	0.20	1.00	0.75	0.20	221.08	5.83	26.02
800_3	0.80	0.90	1.10	2.00	2.40	0.15	0.20	1.00	0.75	0.20	234.17	6.55	29.32
900_1	0.90	0.90	0.90	1.80	2.70	0.20	0.20	1.10	0.75	0.20	240.96	6.09	27.91
900_2	0.90	0.90	1.10	2.00	2.70	0.20	0.20	1.10	0.75	0.20	265.33	6.85	31.53
900_3	0.90	0.90	1.20	2.10	2.70	0.20	0.20	1.10	0.75	0.20	271.02	7.25	33.37
1000_1	1.00	1.00	1.10	2.10	3.00	0.20	0.20	1.20	0.75	0.20	280.27	7.77	34.48
1000_2	1.00	1.00	1.20	2.20	3.00	0.20	0.20	1.20	0.75	0.20	285.96	8.18	36.44

NOTES

① Dimension provided in the table are for different capacities, to be fitted to the working condition.
② Full-pipe velocities range from about 1.5 m/s for 600 mm dimension pipe to about 3 m for all pipe diameters listed. The dimensions provided control at the inlet headwall and also at freeboard at the headwall for the design capacity and free-flow pipe.
③ A maximum full-pipe flow velocity of 3 m/s is permitted for cross drainage culverts.
④ To prevent degradation at the inlet the top of the inlet wall is placed at or near existing ground surface.
⑤ Structures numbered 600_4, 700_2, 800_2, 900_2, 900_3 and 1000_2 may also be used for velocities up to 3.5 m/s.

REFERENCE DWGS. For general notes see dwgs. Nº 20/2/1/01 to 20/2/1/03
For reinforcement see dwg. Nº 13/8/3/01
For detail of pipe connection to structure see dwgs. Nº 17/1/1/01 to 17/1/1/03

Scale: 1:25	IRRIGATION & DRAINAGE STANDARDS		ISLAMIC REPUBLIC OF IRAN MINISTRY OF PLAN & BUDJE
Date;	DWG Nº 13/8/1/01	CONCRETE TRANSITION (TYPE 3) PLAN & SECTION	TECHNICAL RESEARCH AND STANDARD BUREAU
Approved:	Sheet Nº 1 of 4 Rev. Nº:		

@omoorepeyman.ir

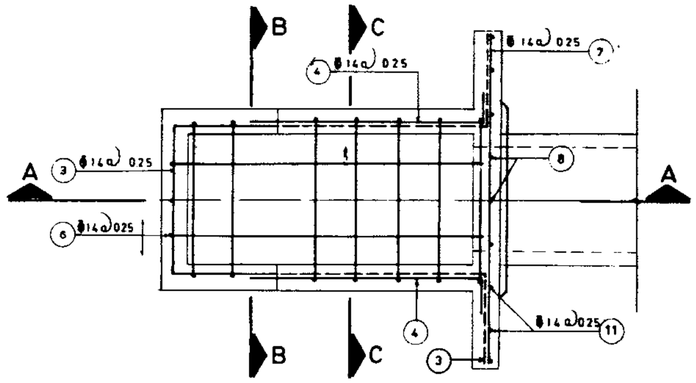

PLAN
Scale 1:25

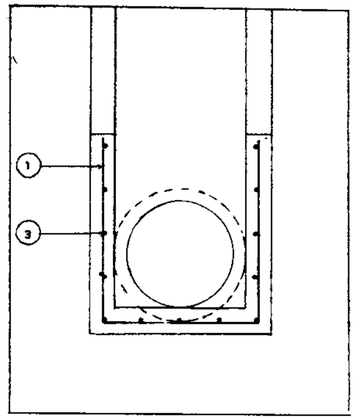

SECTION B-B
Scale 1:25

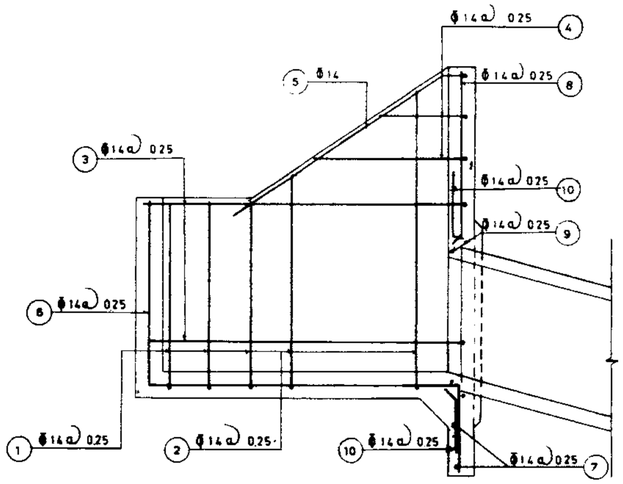

SECTION A-A
Scale 1:25

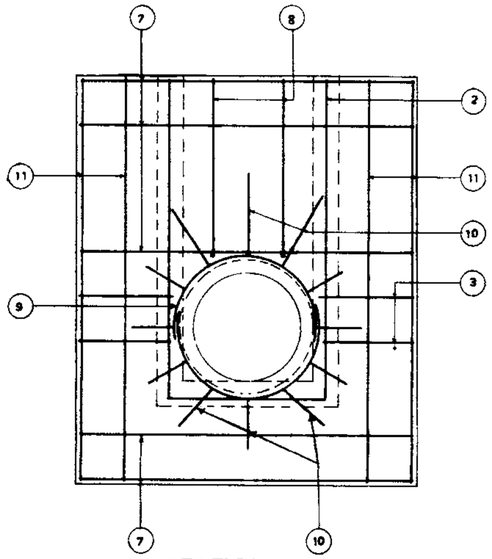

SECTION C-C
Scale 1:25

REFERENCE DWGS: For Plan & Section see dwg. Nº 13/8/1/01
For List of Reinforcement see dwgs. Nº 13/8/3/02 & 13/8/3/03

Scale: 1:25	IRRIGATION & DRAINAGE STANDARDS		ISLAMIC REPUBLIC OF IRAN MINISTRY OF PLAN & BUDJET TECHNICAL RESEARCH AND STANDARD BUREAU
Date:	DWG. Nº 13/8/3/01	CONCRETE TRANSITION (TYPE 3) REINFORCEMENT PLAN & SECTION	
Approved:	Sheet Nº 2 of 4 / Rev. Nº		

omoorepeyman.ir

STR. 600_1

POS.	Nº	FORM	UNIT LENG.	TOTAL LENG.
1	3	0.51 / 1.02 / 0.51	2.04	6.12
2	6	0.51 ~ 1.26 / 1.02 / 0.51 ~ 1.26	2.79	16.74
3	2	0.48 ~ 1.87 / 1.02 / 0.48 ~ 1.87	5.72	11.44
4	6	0.55 ~ 0.89 / 0.20	0.92	5.52
5	2	1.75 / 0.20	1.95	3.90
6	6	0.51 / 1.84 / 0.50	2.85	17.10
7	6	1.92	1.92	11.52
8	4	0.20 ~ 1.61 / 0.20~0.30	1.06	4.24
9	2	0.40 ○ 0.40	3.80	7.60
10	13	0.20~0.30 / 0.40 ~ 0.50	0.70	9.10
11	6	1.80	1.80	10.80
				104.08

104.08 x 1.21 = 125.94 Kg.

STR. 600_2

POS.	Nº	FORM	UNIT LENG.	TOTAL LENG.
1	3	0.66 / 1.02 / 0.66	2.34	7.02
2	6	0.66 ~ 1.41 / 1.02 / 0.66 ~ 1.41	3.09	18.54
3	3	0.48 ~ 1.87 / 1.02 / 0.48 ~ 1.87	5.72	17.16
4	6	0.55 ~ 0.89 / 0.20	0.92	5.52
5	2	1.75 / 0.20	1.95	3.90
6	6	0.66 / 1.84 / 0.50	3.00	18.00
7	6	1.92	1.92	11.52
8	4	0.35 ~ 1.56 / 0.20~0.30	1.21	4.84
9	2	0.40 ○ 0.40	3.80	7.60
10	13	0.20~0.30 / 0.40 ~ 0.50	0.70	9.10
11	6	1.95	1.95	11.70
				114.90

114.90 x 1.21 = 139.03 Kg.

STR. 600_3

POS.	Nº	FORM	UNIT LENG.	TOTAL LENG.
1	3	0.81 / 1.02 / 0.81	2.64	7.92
2	6	0.81 ~ 1.56 / 1.02 / 0.81 ~ 1.56	3.39	20.34
3	3	0.48 ~ 1.87 / 1.02 / 0.48 ~ 1.87	5.72	17.16
4	6	0.55 ~ 0.89 / 0.20	0.92	5.52
5	2	1.75 / 0.20	1.95	3.90
6	6	0.81 / 1.84 / 0.50	3.15	18.90
7	7	1.92	1.92	13.44
8	4	0.50 ~ 1.71 / 0.20~0.30	1.36	5.44
9	2	0.40 ○ 0.40	3.80	7.60
10	13	0.20~0.30 / 0.40 ~ 0.50	0.70	9.10
11	6	2.10	2.10	12.60
				121.92

121.92 x 1.21 = 147.52 Kg.

STR. 600_4

POS.	Nº	FORM	UNIT LENG.	TOTAL LENG.
1	3	1.06 / 1.02 / 1.06	3.14	9.42
2	6	1.06 ~ 1.81 / 1.02 / 1.06 ~ 1.81	3.89	23.34
3	4	0.48 ~ 1.87 / 1.02 / 0.48 ~ 1.87	5.72	22.88
4	6	0.55~0.89 / 0.20	0.92	5.52
5	2	1.75 / 0.20	1.95	3.90
6	6	1.06 / 1.84 / 0.50	3.40	20.40
7	8	1.92	1.92	15.36
8	4	0.75 ~ 1.96 / 0.20~0.30	1.61	6.44
9	2	0.40 ○ 0.40	3.80	7.60
10	13	0.20~0.30 / 0.40~0.50	0.70	9.10
11	6	2.35	2.35	14.10
				138.06

138.06 x 1.21 = 167.05 Kg.

STR. 700_1

POS.	Nº	FORM	UNIT LENG.	TOTAL LENG.
1	4	0.96 / 1.12 / 0.96	3.04	12.16
2	6	0.96 ~ 1.71 / 1.12 / 0.96 ~ 1.71	3.79	22.74
3	4	0.48 ~ 2.17 / 1.12 / 0.48 ~ 2.17	6.42	25.68
4	6	0.55 ~ 0.89 / 0.20	0.92	5.52
5	2	1.75 / 0.20	1.95	3.90
6	6	0.96 / 2.14 / 0.50	3.60	21.60
7	7	2.02	2.02	14.14
8	5	0.55 ~ 1.86 / 0.20~0.30	1.46	7.30
9	2	0.40 ○ 0.40	4.16	8.32
10	15	0.20~0.30 / 0.40 ~ 0.50	0.70	10.50
11	6	2.25	2.25	13.50
				145.36

145.36 x 1.21 = 175.89 Kg.

STR. 700_2

POS.	Nº	FORM	UNIT LENG.	TOTAL LENG.
1	4	1.16 / 1.12 / 1.16	3.44	13.76
2	6	1.16 ~ 1.91 / 1.12 / 1.16 ~ 1.91	4.19	25.14
3	6	0.48 ~ 2.17 / 1.12 / 0.48 ~ 2.17	6.42	38.52
4	6	0.55 ~ 0.89 / 0.20	0.92	5.52
5	2	1.75 / 0.20	1.95	3.90
6	6	1.16 / 2.14 / 0.50	3.80	22.80
7	8	2.02	2.02	16.16
8	5	0.75 ~ 2.06 / 0.20~0.30	1.66	8.30
9	2	0.40 ○ 0.40	4.16	8.32
10	15	0.20~0.30 / 0.40 ~ 0.50	0.70	10.50
11	6	2.45	2.45	14.70
				167.62

167.62 x 1.21 = 202.82 Kg.

STR. 800_1

POS.	Nº	FORM	UNIT LENG.	TOTAL LENG.
1	5	0.66 / 1.22 / 0.66	2.54	12.70
2	7	0.66 ~ 1.56 / 1.22 / 0.66 ~ 1.56	3.44	24.08
3	3	0.63 ~ 2.52 / 1.22 / 0.63 ~ 2.52	7.52	22.56
4	8	0.55 ~ 1.16 / 0.20	1.06	8.48
5	2	2.02 / 0.20	2.22	4.44
6	7	0.66 / 2.49 / 0.50	3.65	25.55
7	6	2.42	2.42	14.52
8	5	0.26 ~ 1.86 / 0.20~0.30	1.31	6.55
9	2	0.40 ○ 0.40	4.66	9.32
10	17	0.20~0.30 / 0.55 ~ 0.65	0.85	14.45
11	8	2.25	2.25	18.00
				156.13

156.13 x 1.21 = 188.92 Kg.

ALL BARS ARE ϕ 14 (1.21 Kg/m)

REFERENCE DWGS: For Reinforcement see dwg. Nº 13/8/3/01

For bars with variable unit length see note under the same title at dwg. Nº 20/2/1/01

Scale:	IRRIGATION DRAINAGE STANDARDS		ISLAMIC REPUBLIC OF IRAN MINISTRY OF PLAN & BUDJET TECHNICAL RESEARCH AND STANDARD BUREAU
Date:	DWG. Nº 13/8/3/02	CONCRETE TRANSITION (TYPE 3) LIST OF REINFORCEMENT	
Approved:	Sheet Nº 3 of 4	Rev Nº	

omoorepeyman.ir

STR. 800_2

POS.	Nº	FORM	UNIT LENG.	TOTAL LENG.
1	5	0.96 | 1.22 | 0.96	3.14	15.70
2	7	0.96 ~ 1.86 | 1.22 | 0.96 ~ 1.86	4.04	28.28
3	4	0.63 2.52 | 1.22 | 0.63 2.52	7.52	30.08
4	8	0.55 ~ 1.16 | 0.20	1.06	8.48
5	2	2.02 | 0.20	2.22	4.44
6	7	0.96 | 2.49 | 0.50	3.95	27.65
7	8	2.42	2.42	19.36
8	5	0.56 ~ 2.16 0.20-0.30	1.61	8.05
9	2	0.40 ( ) 0.40	4.66	9.32
10	17	0.20-0.30 0.55 ~ 0.65	0.85	14.45
11	8	2.55	2.55	20.40
				186.21

186.21 x 1.21 = 225.31 Kg

STR. 800_3

POS.	Nº	FORM	UNIT LENG.	TOTAL LENG.
1	5	1.16 | 1.22 | 1.16	3.54	17.70
2	7	1.16 ~ 2.06 | 1.22 | 1.16 ~ 2.06	4.44	31.08
3	5	0.63 2.52 | 1.22 | 0.63 2.52	7.52	37.60
4	8	0.55 ~ 1.16 | 0.20	1.06	8.48
5	2	2.02 | 0.20	2.22	4.44
6	7	1.16 | 2.49 | 0.50	4.15	29.05
7	8	2.42	2.42	19.36
8	5	0.76 ~ 2.36 0.20-0.30	1.81	9.05
9	2	0.40 ( ) 0.40	4.66	9.32
10	17	0.20-0.30 0.55 ~ 0.65	0.85	14.45
11	8	2.75	2.75	22.00
				197.03

197.03 x 1.21 = 238.41 Kg.

STR. 900_1

POS.	Nº	FORM	UNIT LENG.	TOTAL LENG.
1	6	0.96 | 1.32 | 0.96	3.24	19.44
2	7	0.96 ~ 1.86 | 1.32 | 0.96 ~ 1.86	4.14	28.98
3	4	0.63 2.82 | 1.32 | 0.63 2.82	8.22	32.88
4	8	0.55 ~ 1.16 | 0.20	1.06	8.48
5	2	2.02 | 0.20	2.22	4.44
6	7	0.96 | 2.79 | 0.50	4.25	29.75
7	7	2.52	2.52	17.64
8	6	0.46 ~ 2.16 0.20-0.30	1.56	9.36
9	3	0.40 ( ) 0.40	5.04	15.12
10	19	0.20-0.30 0.55 ~ 0.65	0.85	16.15
11	8	2.55	2.55	20.40
				202.64

202.64 x 1.21 = 245.19 Kg.

STR. 900_2

POS.	Nº	FORM	UNIT LENG.	TOTAL LENG.
1	6	1.16 | 1.32 | 1.16	3.64	21.84
2	7	1.16 ~ 2.06 | 1.32 | 1.16 ~ 2.06	4.54	31.78
3	5	0.63 2.82 | 1.32 | 0.63 2.82	8.22	41.10
4	8	0.55 ~ 1.16 | 0.20	1.06	8.48
5	2	2.02 | 0.20	2.22	4.44
6	7	1.16 | 2.79 | 0.50	4.45	31.15
7	8	2.52	2.52	20.16
8	6	0.66 ~ 2.36 0.20-0.30	1.76	10.56
9	3	0.40 ( ) 0.40	5.04	15.12
10	19	0.20-0.30 0.55 ~ 0.65	0.85	16.15
11	8	2.75	2.75	22.00
				222.78

222.78 x 1.21 = 269.56 Kg.

STR. 900_3

POS.	Nº	FORM	UNIT LENG.	TOTAL LENG.
1	6	1.26 | 1.32 | 1.26	3.84	23.04
2	7	1.26 ~ 2.16 | 1.32 | 1.26 ~ 2.16	4.74	33.18
3	5	0.63 2.82 | 1.32 | 0.63 2.82	8.22	41.10
4	8	0.55 ~ 1.16 | 0.20	1.06	8.48
5	2	2.02 | 0.20	2.22	4.44
6	7	1.26 | 2.79 | 0.50	4.55	31.85
7	8	2.52	2.52	20.16
8	6	0.76 ~ 2.46 0.20-0.30	1.86	11.16
9	3	0.40 ( ) 0.40	5.04	15.12
10	19	0.20-0.30 0.55 ~ 0.65	0.85	16.15
11	8	2.85	2.85	22.80
				227.48

227.48 x 1.21 = 275.25 Kg

STR. 1000_1

POS.	Nº	FORM	UNIT LENG.	TOTAL LENG.
1	6	1.16 | 1.42 | 1.16	3.74	22.44
2	7	1.16 ~ 2.16 | 1.42 | 1.16 ~ 2.16	4.74	33.18
3	5	0.63 3.12 | 1.42 | 0.63 3.12	8.92	44.60
4	8	0.55 ~ 1.31 | 0.20	1.13	9.04
5	2	2.20 | 0.20	2.40	4.80
6	7	1.16 | 3.09 | 0.50	4.75	33.25
7	8	2.62	2.62	20.96
8	6	0.66 ~ 2.46 0.20-0.30	1.81	10.86
9	3	0.40 ( ) 0.40	5.40	16.20
10	20	0.20-0.30 0.55 ~ 0.65	0.85	17.00
11	8	2.85	2.85	22.80
				235.13

235.13 x 1.21 = 284.51 Kg.

STR. 1000_2

POS.	Nº	FORM	UNIT LENG.	TOTAL LENG.
1	6	1.26 | 1.42 | 1.26	3.94	23.64
2	7	1.26 ~ 2.26 | 1.42 | 1.26 ~ 2.26	4.94	34.58
3	5	0.63 3.12 | 1.42 | 0.63 3.12	8.92	44.60
4	8	0.55 ~ 1.31 | 0.20	1.13	9.04
5	2	2.20 | 0.20	2.40	4.80
6	7	1.26 | 3.09 | 0.50	4.85	33.95
7	8	2.62	2.62	20.96
8	6	0.76 ~ 2.56 0.20-0.30	1.91	11.46
9	3	0.40 ( ) 0.40	5.40	16.20
10	20	0.20-0.30 0.55 ~ 0.85	0.85	17.00
11	8	2.95	2.95	23.60
				239.83

239.83 x 1.21 = 290.19 Kg.

ALL BARS ARE Ø 14 (1.21 Kg/m)

REFERENCE DWGS: For Reinforcement see dwg. Nº 13/8/3/01
For bars with variable unit length see note under the same title at dwg. Nº 20/2/1/01

Scale:	IRRIGATION & DRAINAGE STANDARDS		
Date:	DWG.Nº 13/8/3/03	CONCRETE TRANSITION (TYPE3) LIST OF REINFORCEMENT	
Approved:	Sheet Nº 4 of 4	Rev. Nº	

ISLAMIC REPUBLIC OF IRAN
MINISTRY OF PLAN & BUDJET
TECHNICAL RESEARCH AND STANDARD BUREAU

omoorepeyman.ir

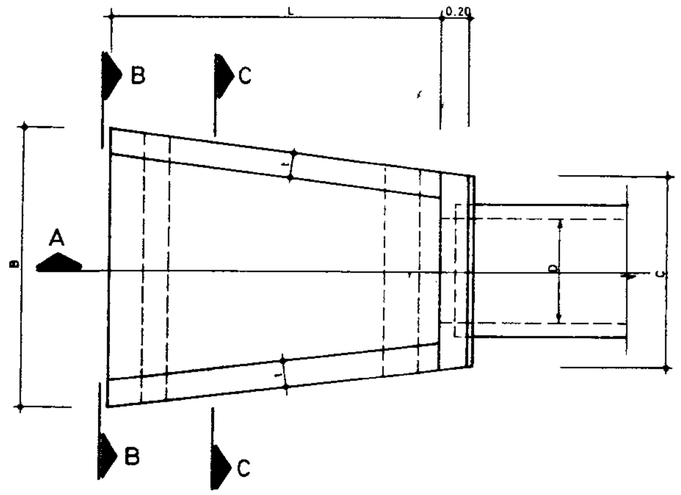

PLAN
Sloped type 2

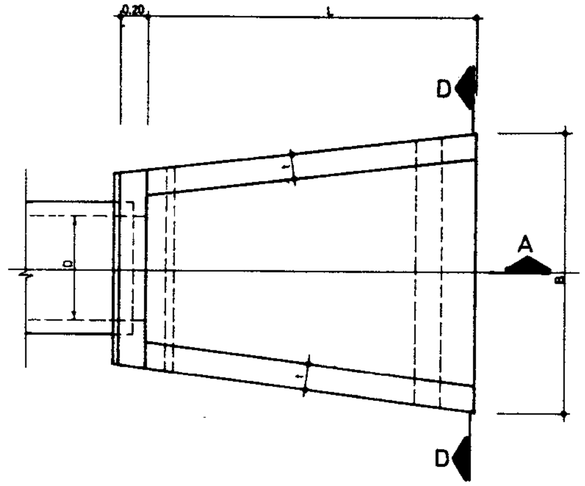

PLAN
Straight type 2

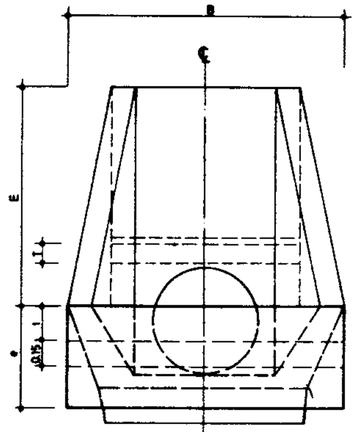

SECTION B-B
Sloped

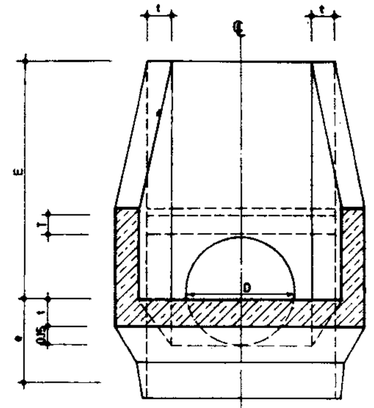

SECTION C-C
Sloped

DIMENSION TABLE

Dia.	B	C	E	L	S	T	e	t	tc	R/Bar. Kg.	Conc. m^3	Form m^2	R/Bar. Kg	Conc. m^3	Form m^2
0.40	1.35	0.85	0.95	1.45	0.10	0.15	0.60	0.15	0.20	87.08	1.03	8.45	78.46	0.77	6.56
0.45	1.40	0.90	1.00	1.55	0.10	0.15	0.60	0.15	0.20	96.91	1.16	9.83	82.84	0.86	7.15
0.50	1.45	1.00	1.10	1.65	0.10	0.15	0.60	0.15	0.20	103.41	1.32	11.08	88.20	0.97	8.51
0.60	1.60	1.10	1.25	1.90	0.10	0.15	0.60	0.15	0.20	125.09	1.65	13.62	105.85	1.19	9.89
0.70	1.90	1.20	1.30	2.10	0.15	0.20	0.60	0.15	0.20	139.95	1.97	15.57	120.36	1.43	11.11
0.80	2.05	1.35	1.40	2.15	0.15	0.20	0.75	0.15	0.25	164.83	2.36	18.18	142.59	1.78	13.35
0.90	2.35	1.45	1.50	2.30	0.20	0.20	0.75	0.15	0.25	191.12	2.75	20.81	168.03	2.09	15.41
1.00	2.65	1.55	1.60	2.45	0.20	0.20	0.75	0.18	0.25	215.42	3.51	23.05	189.62	2.64	17.03
1.20	3.20	1.75	1.80	2.75	0.20	0.20	0.75	0.18	0.25	262.00	4.42	28.52	218.44	3.34	20.66
										WITH SLOPE			STRAIGHT		

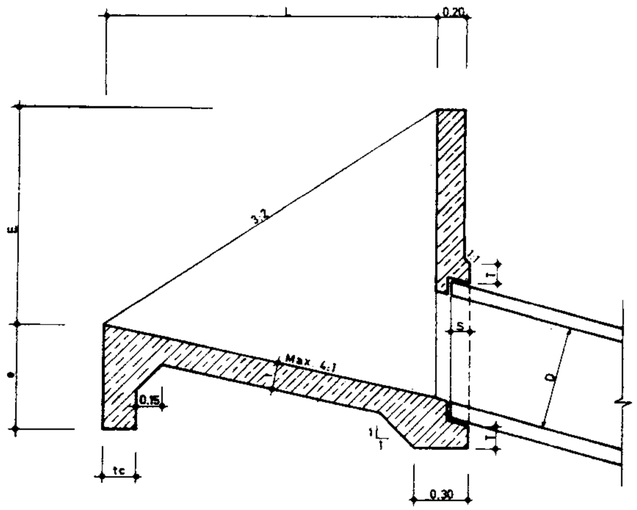

SECTION A-A
Sloped type 2

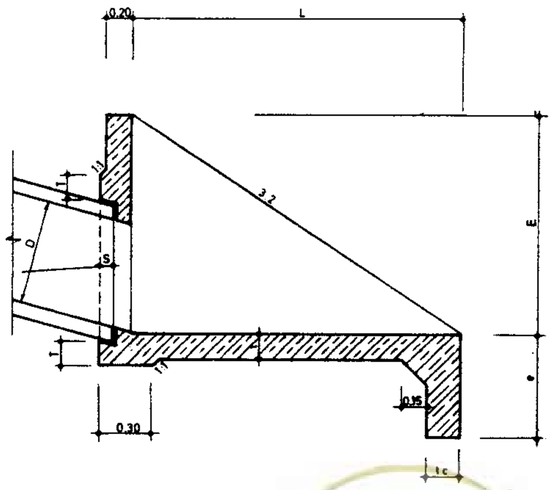

SECTION A-A
Straight type 2

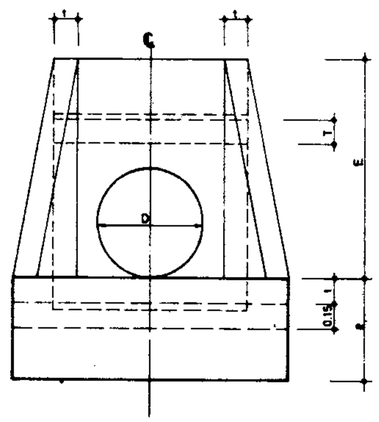

SECTION D-D
Stright

NOTES:

① Dimensions in the table are for pipe diameters sized for a full pipe flow velocity of 3 m/s , and a free-flow pipe with hydralic control at the inlet transition headwall.

② To prevent degradation at the inlet the invert at the transition cutoff is located at or near existing ground surface.

③ The tabulateu dimensions provide for freeboard at the inlet headwall. If submergence of the top of the headwall for design flow is not objectionable, the listed transition dimensions may also be used for design flow for a full pipe velocity of 3.5 m/s. In this case a baffled outlet is required.

④ A maximum full-pipe flow velocity of 3 m/s is permitted for cross-drainage culvert structures having concrete outlet transitions.

REFERENCE DWGS: For general notes see dwg. Nº. 20/2/1/03
For reinforcement see dwg. Nº. 13/7/3/01
For detail of pipe connection to structure see dwgs. Nº. 17/1/1/01 to 17/1/1/03

Scale: N.T.S.	IRRIGATION & DRAINAGE STANDARDS	
Date:	DWG Nº 13/7/1/01	CONCRETE TRANSITION (Type 2) PLAN & SECTION
Approved:	Sheet Nº 1 of 4 Rev Nº:	

ISLAMIC REPUBLIC OF IRAN
MINISTRY OF PLAN & BUDJET
TECHNICAL RESEARCH AND STANDARD BUREAU

@omoorepeyman.ir

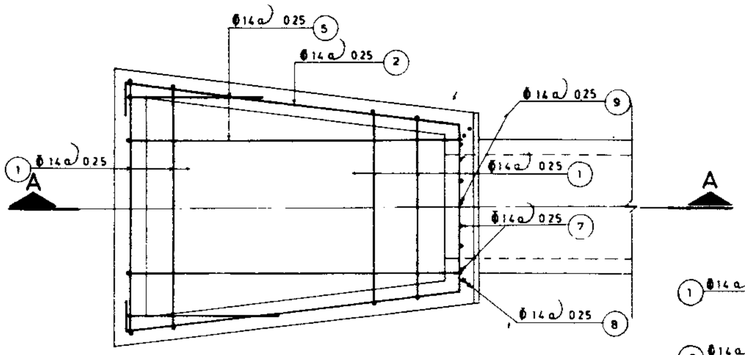

PLAN

Sloped Scale 1:25

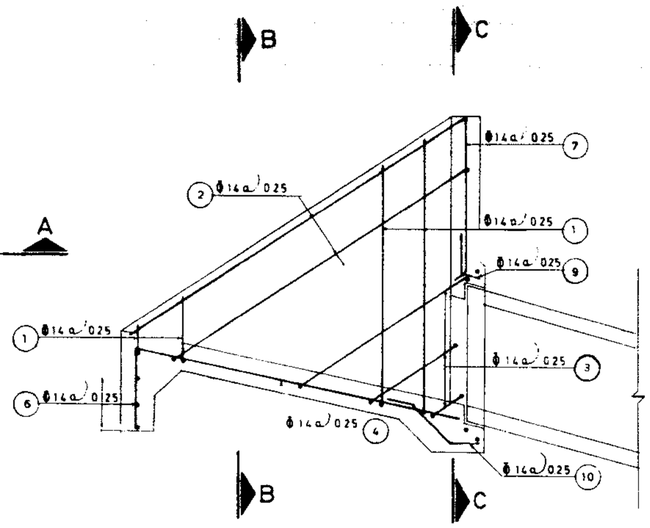

SECTION A-A

Sloped Scale 1:25

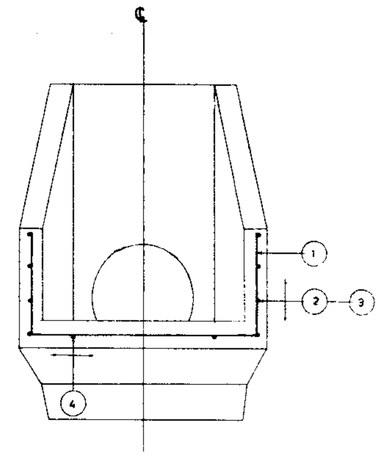

SECTION B-B

Sloped Scale 1:25

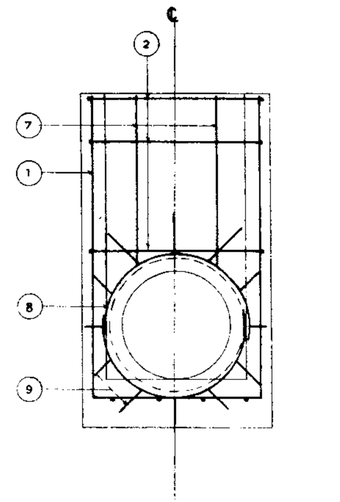

SECTION C-C

Sloped Scale 1:25

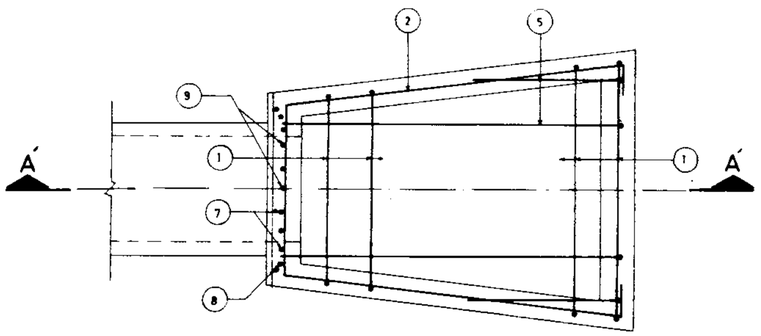

PLAN

Straight Scale 1:25

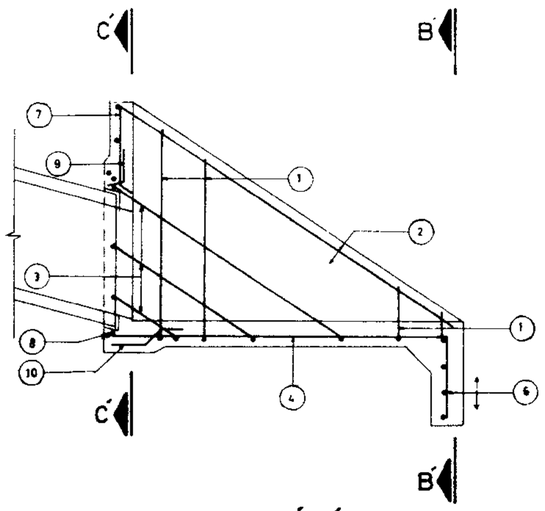

SECTION A´-A´

Straight Scale 1:25

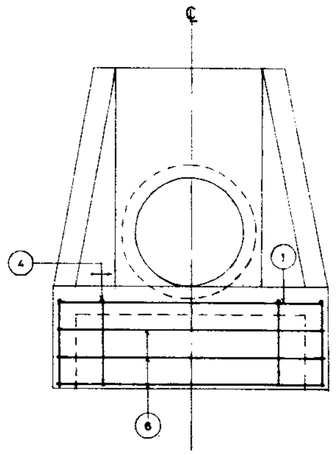

SECTION B´-B´

Straight Scale 1:25

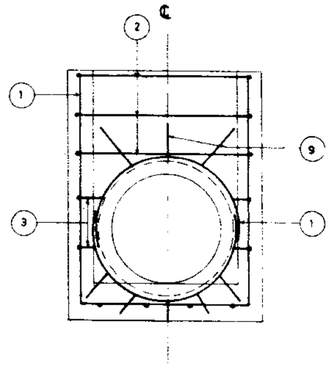

SECTION C´-C´

Straight Scale 1:25

REFERENCE DWGS: For Plan & Section see dwg. Nº. 13/7/1/01

For List of Reinforcement see dwgs. Nº. 13/7/3/02 & 13/7/3/03

Scale: 1:25	IRRIGATION & DRAINAGE STANDARDS		
Date:	DWG Nº 13/7/3/01		CONCRETE TRANSITION (TYPE 2) REINFORCEMENT PLAN & SECTION
Approved:	Sheet Nº 2of 4	Rev Nº -	

ISLAMIC REPUBLIC OF IRAN
MINISTRY OF PLAN & BUDJET
TECHNICAL RESEARCH AND STANDARD BUREAU

omoorepeyman.ir

Dia 0.40

POS.	Nº	FORM	UNIT LENG.	TOTAL LENG.
1	7	0.20 / 1.37 — 0.77 ~ 1.27 — 0.20 / 1.37	2.59	18.13
2	4	0.20 / 0.20 — 0.68 ~ 1.71 — 0.77	3.51	14.04
3	6	0.20 — 0.40 ~ 0.68 — 0.20	0.94	5.64
4	3	0.48 — 1.49	1.97	5.91
5	4	0.48 — 0.64 ~ 1.49	1.55	6.20
6	3	1.27	1.27	3.81
7	5	0.20~0.30 — 0.53 ~ 0.75	0.89	4.45
8	2	0.40 — 0.40	2.92	5.84
9	7	0.20 ~ 0.60 / 0.20	0.60	4.20
10	5	0.55 — 0.20	0.75	3.75
				71.97

71.97 x 1.21 = 87.08 Kg.

Dia 0.45

POS.	Nº	FORM	UNIT LENG.	TOTAL LENG.
1	8	0.20 / 1.45 — 0.82 ~ 1.32 — 0.20 / 1.45	2.72	21.76
2	4	0.20 / 0.20 — 0.74 ~ 1.80 — 0.82	3.76	15.04
3	8	0.20 — 0.40 ~ 0.74 — 0.20	0.97	7.76
4	3	0.48 — 1.60	2.08	6.24
5	4	0.48 — 0.67 ~ 1.60	1.62	6.48
6	3	1.32	1.32	3.96
7	5	0.20~0.30 — 0.56 ~ 0.81	0.94	4.70
8	2	0.40 — 0.40	3.10	6.20
9	7	0.20 ~ 0.60 / 0.20	0.60	4.20
10	5	0.55 — 0.20	0.75	3.75
				80.09

80.09 x 1.21 = 96.91 Kg

Dia 0.50

POS.	Nº	FORM	UNIT LENG.	TOTAL LENG.
1	8	0.20 / 1.57 — 0.92 ~ 1.37 — 0.20 / 1.57	2.92	23.36
2	4	0.20 / 0.20 — 0.81 ~ 1.98 — 0.92	4.11	16.44
3	8	0.20 — 0.40 ~ 0.81 — 0.20	1.01	8.08
4	3	0.48 — 1.70	2.18	6.54
5	4	0.48 — 0.70 ~ 1.70	1.68	6.72
6	3	1.37	1.37	4.11
7	5	0.20~0.30 — 0.63 ~ 0.95	1.02	5.10
8	2	0.40 — 0.40	3.28	6.56
9	8	0.20 ~ 0.60 / 0.20	0.60	4.80
10	5	0.55 — 0.20	0.75	3.75
				85.46

85.46 x 1.21 = 103.41 Kg

Dia 0.60

POS.	Nº	FORM	UNIT LENG.	TOTAL LENG.
1	9	0.20 / 1.79 — 1.02 ~ 1.52 — 0.20 / 1.79	3.25	29.34
2	4	0.20 / 0.20 — 0.99 ~ 2.25 — 1.02	4.66	18.64
3	8	0.20 — 0.40 ~ 0.99 — 0.20	1.10	8.80
4	4	0.48 — 1.96	2.44	9.76
5	4	0.48 — 0.77 ~ 1.96	1.85	7.40
6	3	1.52	1.52	4.56
7	6	0.20~0.30 — 0.71 ~ 1.05	1.13	6.78
8	2	0.40 — 0.40	3.80	7.60
9	10	0.20 ~ 0.60 / 0.20	0.60	6.00
10	6	0.55 — 0.20	0.75	4.50
				103.38

103.38 x 1.21 = 125.09 Kg

Dia 0.70

POS.	Nº	FORM	UNIT LENG.	TOTAL LENG.
1	10	0.20 / 1.89 — 1.12 ~ 1.62 — 0.20 / 1.89	3.46	34.60
2	4	0.20 / 0.20 — 1.10 ~ 2.34 — 1.12	4.96	19.84
3	10	0.20 — 0.40 ~ 1.10 — 0.20	1.15	11.50
4	4	0.48 — 2.16	2.64	10.56
5	4	0.48 — 0.83 ~ 2.16	1.98	7.92
6	3	1.62	1.62	4.86
7	6	0.20~0.30 — 0.71 ~ 1.10	1.16	6.96
8	2	0.40 — 0.40	4.16	8.32
9	11	0.20 ~ 0.60 / 0.20	0.60	6.60
10	6	0.55 — 0.20	0.75	4.50
				115.66

115.66 x 1.21 = 139.95 Kg.

Dia 0.80

POS.	Nº	FORM	UNIT LENG.	TOTAL LENG.
1	10	0.20 / 2.00 — 1.27 ~ 1.97 — 0.20 / 2.00	3.82	38.20
2	4	0.20 / 0.20 — 1.30 ~ 2.52 — 1.27	5.49	21.96
3	10	0.20 — 0.40 ~ 1.30 — 0.20	1.25	12.50
4	5	0.63 — 2.21	2.84	14.20
5	6	0.63 — 0.85 ~ 2.21	2.16	12.96
6	3	1.97	1.97	5.91
7	7	0.20~0.30 — 0.68 ~ 1.14	1.16	8.12
8	2	0.40 — 0.40	4.66	9.32
9	13	0.20 ~ 0.60 / 0.20	0.60	7.80
10	7	0.55 — 0.20	0.75	5.25
				136.22

136.22 x 1.21 = 164.83 Kg

Dia 0.90

POS.	Nº	FORM	UNIT LENG.	TOTAL LENG.
1	11	0.20 / 2.14 — 1.37 ~ 2.27 — 0.20 / 2.14	4.15	45.65
2	4	0.20 / 0.20 — 1.43 ~ 2.70 — 1.37	5.50	23.60
3	12	0.20 — 0.40 ~ 1.43 — 0.20	1.32	15.84
4	5	0.63 — 2.37	3.00	15.00
5	6	0.63 — 0.89 ~ 2.37	2.26	13.56
6	3	2.27	2.27	6.81
7	7	0.20~0.30 — 0.72 ~ 1.23	1.23	8.61
8	3	0.40 — 0.40	5.04	15.12
9	14	0.20 ~ 0.60 / 0.20	0.60	8.40
10	7	0.55 — 0.20	0.75	6.00
				157.95

157.95 x 1.21 = 191.12 Kg

Dia 1.00

POS.	Nº	FORM	UNIT LENG.	TOTAL LENG.
1	11	0.20 / 2.30 — 1.47 ~ 2.57 — 0.20 / 2.30	4.52	49.72
2	4	0.20 / 0.20 — 1.56 ~ 2.88 — 1.47	6.31	25.24
3	12	0.20 — 0.40 ~ 1.56 — 0.20	1.38	16.56
4	6	0.60 — 2.52	3.12	18.72
5	8	0.60 — 0.94 ~ 2.52	2.33	18.64
6	3	2.57	2.57	7.71
7	8	0.20~0.30 — 0.75 ~ 1.31	1.28	10.24
8	3	0.40 — 0.40	5.40	16.20
9	15	0.20 ~ 0.60 / 0.20	0.60	9.00
10	8	0.55 — 0.20	0.75	6.00
				178.03

178.03 x 1.21 = 215.42 Kg.

Dia 1.20

POS.	Nº	FORM	UNIT LENG.	TOTAL LENG.
1	12	0.20 / 2.58 — 1.67 ~ 3.12 — 0.20 / 2.58	5.18	62.16
2	5	0.20 / 0.20 — 1.88 ~ 3.24 — 1.67	7.19	35.95
3	14	0.20 — 0.40 ~ 1.88 — 0.20	1.54	21.56
4	6	0.60 — 2.83	3.43	20.58
5	8	0.60 — 1.03 ~ 2.83	2.53	20.24
6	3	3.12	3.12	9.36
7	8	0.20~0.30 — 0.79 ~ 1.47	1.38	11.04
8	3	0.40 — 0.40	6.28	18.84
9	18	0.20 ~ 0.60 / 0.20	0.60	10.80
10	8	0.55 — 0.20	0.75	6.00
				216.53

216.53 x 1.21 = 262.00 Kg

ALL BARS ARE ϕ 14 (1.21 Kg/m)

REFERENCE DWGS: For Reinforcement see dwg. Nº 13/7/3/01
For bars with variable unit length see note under the same title at dwg. Nº 20/2/1/01

Scale:	IRRIGATION & DRAINAGE STANDARDS		
Date:	DWG Nº 13/7/3/02	CONCRETE TRANSITION (TYPE 2)	
Approved:	Sheet Nº: 3 of 4	Rev Nº:	LIST OF REINFORCEMENT (SLOPED)

ISLAMIC REPUBLIC OF IRAN
MINISTRY OF PLAN & BUDJET
TECHNICAL RESEARCH AND
STANDARD BUREAU

omoorepeyman.ir

Dia 0.40

POS.	Nº	FORM	UNIT LENG.	TOTAL LENG.
1	7	0.20 (1.01) 0.77 ~ 1.27 0.20 (1.01)	2.23	15.61
2	2	0.20 0.20 0.84 ~ 1.71 0.77	3.82	7.64
3	6	0.20 0.52 ~ 0.94 0.20	1.13	6.78
4	5	0.45 1.45	1.90	9.50
5	4	0.48 0.64 ~ 1.45	1.53	6.12
6	3	1.27	1.27	3.81
7	3	0.20~0.30 0.17 ~ 0.39	0.53	1.59
8	2	0.40 0.40	2.92	5.84
9	7	0.20 0.20 ~ 0.60	0.60	4.20
10	5	0.55 0.20	0.75	3.75
				64.84

64.84 x 1.21 = 78.46 Kg

Dia 0.45

POS.	Nº	FORM	UNIT LENG.	TOTAL LENG.
1	8	0.20 (1.06) 0.82 ~ 1.32 0.20 (1.06)	2.33	18.64
2	2	0.20 0.20 1.03 ~ 1.80 0.82	4.05	8.10
3	8	0.20 0.40 ~ 1.03 0.20	1.12	8.96
4	3	0.48 1.55	2.03	6.09
5	4	0.48 0.67 ~ 1.55	1.59	6.36
6	3	1.32	1.32	3.96
7	4	0.20~0.30 0.17 ~ 0.42	0.55	2.20
8	2	0.40 0.40	3.10	6.20
9	7	0.20 0.20 ~ 0.60	0.60	4.20
10	5	0.55 0.20	0.75	3.75
				68.46

68.46 x 1.21 = 82.84 Kg

Dia 0.50

POS.	Nº	FORM	UNIT LENG.	TOTAL LENG.
1	8	0.20 (1.16) 0.92 ~ 1.37 0.20 (1.16)	2.51	20.08
2	2	0.20 0.20 1.12 ~ 1.98 0.92	4.42	8.84
3	8	0.20 0.40 ~ 1.12 0.20	1.16	9.28
4	3	0.48 1.65	2.13	6.39
5	4	0.48 0.70 ~ 1.65	1.66	6.64
6	3	1.37	1.37	4.11
7	4	0.20~0.30 0.22 ~ 0.49	0.61	2.44
8	2	0.40 0.40	3.28	6.56
9	8	0.20 0.20 ~ 0.60	0.60	4.80
10	5	0.55 0.20	0.75	3.75
				72.89

72.89 x 1.21 = 88.20 Kg

Dia 0.60

POS.	Nº	FORM	UNIT LENG.	TOTAL LENG.
1	9	0.20 (1.31) 1.02 ~ 1.52 0.20 (1.31)	2.78	25.02
2	2	0.20 0.20 1.37 ~ 2.25 1.02	5.04	10.08
3	8	0.20 0.40 ~ 1.37 0.20	1.29	10.32
4	4	0.48 1.90	2.38	9.52
5	4	0.48 0.77 ~ 1.90	1.82	7.28
6	3	1.52	1.52	4.56
7	4	0.20~0.30 0.23 ~ 0.57	0.65	2.60
8	2	0.40 0.40	3.80	7.60
9	10	0.20 0.20 ~ 0.60	0.60	6.00
10	6	0.55 0.20	0.75	4.50
				87.48

87.48 x 1.21 = 105.85 Kg

Dia 0.70

POS.	Nº	FORM	UNIT LENG.	TOTAL LENG.
1	10	0.20 (1.36) 1.12 ~ 1.62 0.20 (1.36)	2.93	29.30
2	2	0.20 0.20 1.55 ~ 2.34 1.12	5.41	10.82
3	10	0.20 0.40 ~ 1.55 0.20	1.38	13.80
4	4	0.48 2.10	2.58	10.32
5	4	0.48 0.83 ~ 2.10	1.95	7.80
6	3	1.62	1.62	4.86
7	5	0.20~0.30 0.18 ~ 0.57	0.63	3.15
8	2	0.40 0.40	4.16	8.32
9	11	0.20 0.20 ~ 0.60	0.60	6.60
10	6	0.55 0.20	0.75	4.50
				99.47

99.47 x 1.21 = 120.36 Kg

Dia 0.80

POS.	Nº	FORM	UNIT LENG.	TOTAL LENG.
1	10	0.20 (1.46) 1.27 ~ 1.97 0.20 (1.46)	3.28	32.80
2	2	0.20 0.20 1.82 ~ 2.52 1.27	5.99	11.98
3	10	0.20 0.40 ~ 1.80 0.20	1.50	15.00
4	5	0.63 2.15	2.78	13.90
5	6	0.63 0.95 ~ 2.15	2.13	12.78
6	3	1.97	1.97	5.91
7	5	0.20~0.30 0.14 ~ 0.60	0.62	3.10
8	2	0.40 0.40	4.66	9.32
9	13	0.20 0.20 ~ 0.60	0.60	7.80
10	7	0.55 0.20	0.75	5.25
				117.84

117.84 x 1.21 = 142.59 Kg

Dia 0.90

POS.	Nº	FORM	UNIT LENG.	TOTAL LENG.
1	11	0.20 (1.56) 1.37 ~ 2.27 0.20 (1.56)	3.58	39.38
2	2	0.20 0.20 1.98 ~ 2.70 1.37	6.45	12.90
3	12	0.20 0.40 ~ 1.98 0.20	1.59	19.08
4	5	0.63 2.30	2.93	14.65
5	6	0.63 0.89 ~ 2.30	2.23	13.38
6	3	2.27	2.27	6.81
7	6	0.20~0.30 0.14 ~ 0.65	0.65	3.90
8	3	0.40 0.40	5.04	15.12
9	14	0.20 0.20 ~ 0.60	0.60	8.40
10	7	0.55 0.20	0.75	5.25
				138.87

138.87 x 1.21 = 168.03 Kg

Dia 1.00

POS.	Nº	FORM	UNIT LENG.	TOTAL LENG.
1	11	0.20 (1.66) 1.47 ~ 2.57 0.20 (1.66)	3.88	42.68
2	2	0.20 0.20 2.16 ~ 2.86 1.47	6.91	13.82
3	12	0.20 0.40 ~ 2.16 0.20	1.68	20.16
4	6	0.63 2.45	3.08	18.48
5	8	0.63 0.94 ~ 2.45	2.33	18.64
6	3	2.57	2.57	7.71
7	6	0.20~0.30 0.14 ~ 0.70	0.67	4.02
8	3	0.40 0.40	5.40	16.20
9	15	0.20 0.20 ~ 0.60	0.60	9.00
10	8	0.55 0.20	0.75	6.00
				156.71

156.71 x 1.21 = 189.62 Kg

Dia 1.20

POS.	Nº	FORM	UNIT LENG.	TOTAL LENG.
1	12	0.20 (1.89) 1.67 ~ 3.12 0.20 (1.89)	4.49	53.88
2	2	0.20 0.20 2.58 ~ 3.24 1.67	7.90	15.80
3	14	0.20 0.40 ~ 2.58 0.20	1.50	21.00
4	6	0.60 2.75	3.35	20.10
5	8	0.60 1.03 ~ 2.75	2.49	19.92
6	3	3.12	3.12	9.36
7	7	0.20~0.30 0.10 ~ 0.78	0.69	4.83
8	3	0.40 0.40	6.28	18.84
9	18	0.20 0.20 ~ 0.60	0.60	10.80
10	8	0.55 0.20	0.75	6.00
				180.53

180.53 x 1.21 = 218.44 Kg

ALL BARS ARE Φ 14 (1.21 Kg/m)

REFERENCE DWGS: For Reinforcement see dwg. Nº 13/7/3/01
For bars with variable unit length see note under the same title at dwg. Nº 20/2/1/01

Scale:	IRRIGATION & DRAINAGE STANDARDS	
Date:	DWG. Nº 13/7/3/03	CONCRETE TRANSITION (TYPE 2) LIST OF REINFORCEMENT (STRAIGHT)
Approve:	Sheet Nº 4 of 4 Rev: Nº	

ISLAMIC REPUBLIC OF IRAN
MINISTRY OF PLAN & BUDJET
TECHNICAL RESEARCH AND STANDARD BUREAU

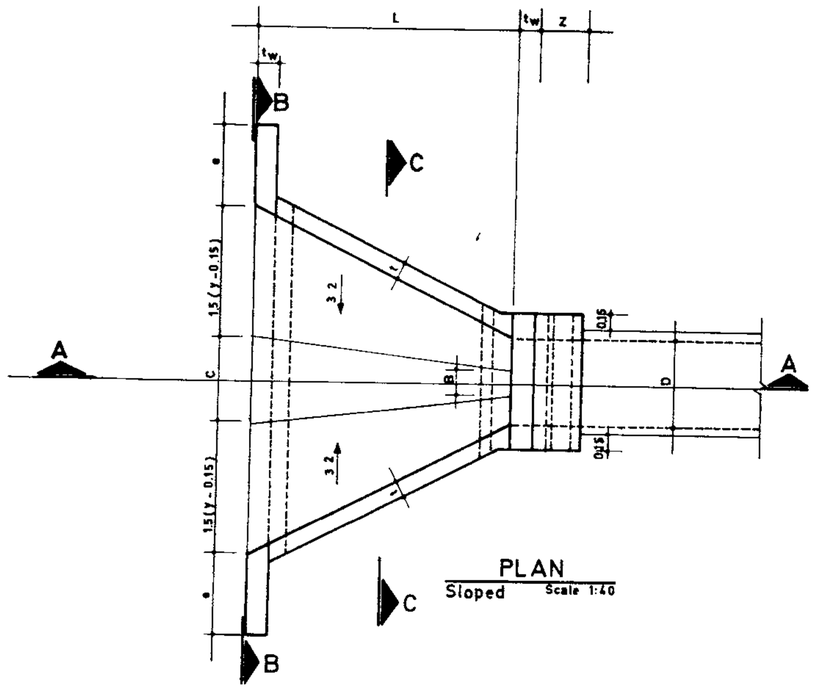

PLAN
Sloped Scale 1:40

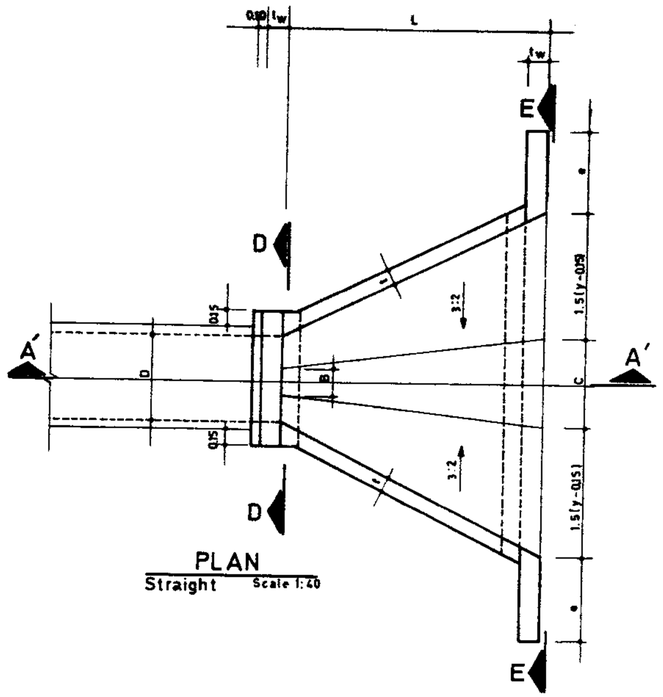

PLAN
Straight Scale 1:40

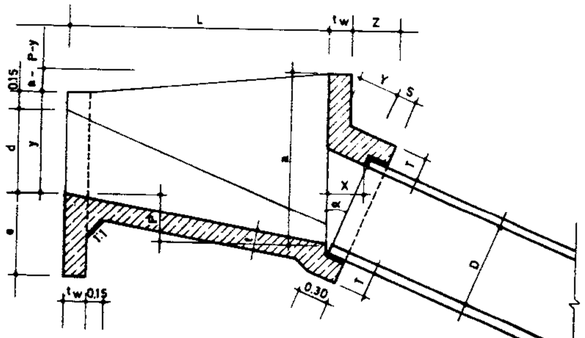

SECTION A_A
Sloped Scale 1:40

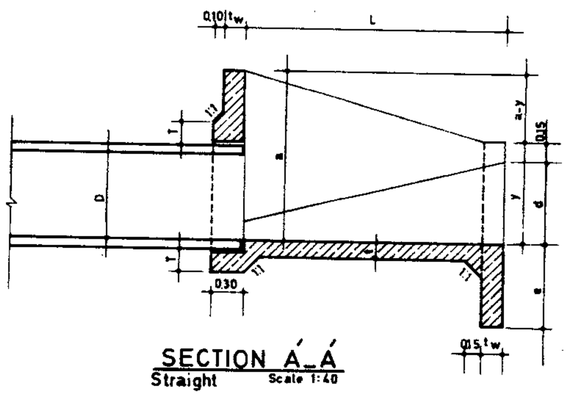

SECTION A'_A'
Straight Scale 1:40

DIMENSION INFORMATION

Let :

D = Pipe diameter
L = Transition length
C = Base width at cutoff wall
d = Depth of water
θ = Water surface angle

The following relationship between the dimension should be considered :

– L = 3D
– Dimension B is chosen so that the 1.5 to 1 sloping walls are approximately tangent to the opening at the headwall for simplification let.
B = 303 D
– C dimension is dependent to the water surface angle.

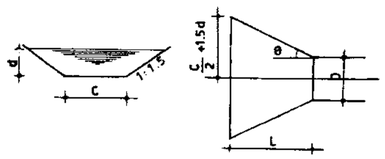

From the above fig :
$C = 2L\,tg\theta - 3d + D$
or
$C = (6\,tg\,\theta + 1)D - 3d$
– Dimension C could be calculated easily by using the following table.

D/d ratio	θ = 22.5°	θ = 25°	θ = 27.5°
1	C = 0.5 D	C = 0.8 D	C = 1.1 D
1.25	C = 1.1 D	C = 1.4 D	C = 1.7 D
1.50	C = 1.5 D	C = 1.8 D	C = 2.1 D
2	C = 2 D	C = 2.3 D	C = 2.6 D

– Freeboard at the transition cutoff adjacent to concrete canal lining or other hard surface or burried membrance canal lining shall be selected according to the following table.

Water Depth at Cutoff (m)	Minimum Freebord (cm)
d ≤ 0.35	15
0.35 < d ≤ 0.60	23
0.60 < d ≤ 1.50	30

– The invert at the headwall opening is established by the required submergence of the top of the opening as discussed under design consideration.
– P value is difference in elevation of the invert at the transition cutoff and at the headwall opening.

$P \leq \frac{3}{4} D$ for inlet
$P \leq \frac{1}{2} D$ for outlet

– Y = Water depth at cutoff(d) + freeboard at cutoff
– $a = \frac{D}{\cos\alpha} + 1.5\left(\frac{V_p^2}{2g} - \frac{V_p^2}{2g}\right)$ + freeboard at cutoff ≥ Y+P
For D ≤ 600 mm a may be taken equal to Y+P
For D > 600 mm a shall be taken greater than Y+P
Dimension e and tw may be determind according the following table.

Depth of water in canal (d) (m)	e (m)	tw (m)
d ≤ 90	0.60	0.15
90 < d ≤ 1.80	0.75	0.20
1.80 < d	0.90	0.20

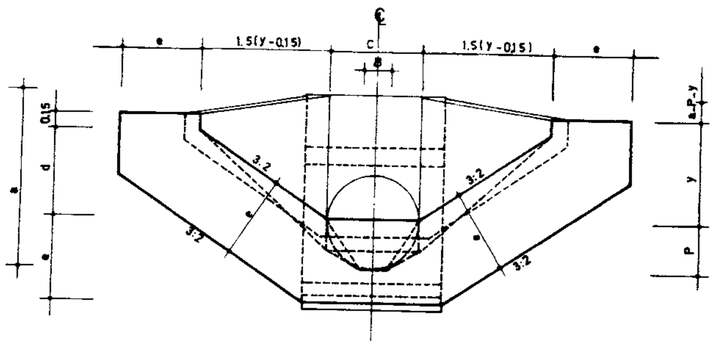

SECTION B_B
Scale 1:40

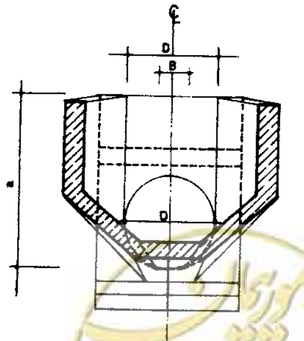

SECTION C_C
Scale 1:40

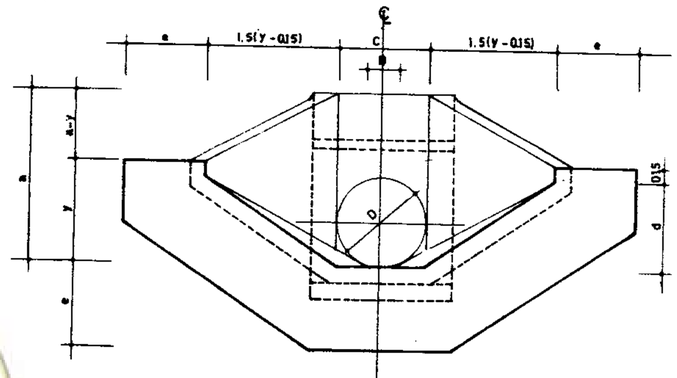

SECTION E_E
Scale 1:40

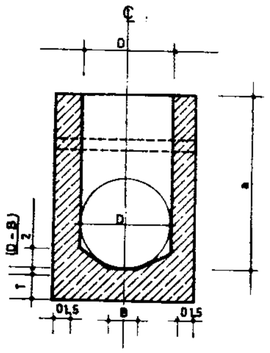

SECTION D_D
Scale 1:40

REFERENCE DWGS : For reinforcement see dwg. Nº. 13/6/3/01
For detail pipe junction to structure see dwgs. Nº. 17/1/1/01 TO 17/1/1/03
For general notes see dwgs. Nº. 20/2/1/01 TO 20/2/1/03

Scale: 1:40	IRRIGATION & DEAINAGE STANDARDS	
Date:	DWG Nº 13/6/1/01	CONCRETE TRANSITION (Type 1) PLAN & SECTION
Approved:	Sheet. Nº 1 of 3 Rev. Nº	

ISLAMIC REPUBLIC OF IRAN
MINISTRY OF PLAN & BUDJET
TECHNICAL RESEARCH AND STANDARD BUREAU

@omoorepeyman.ir

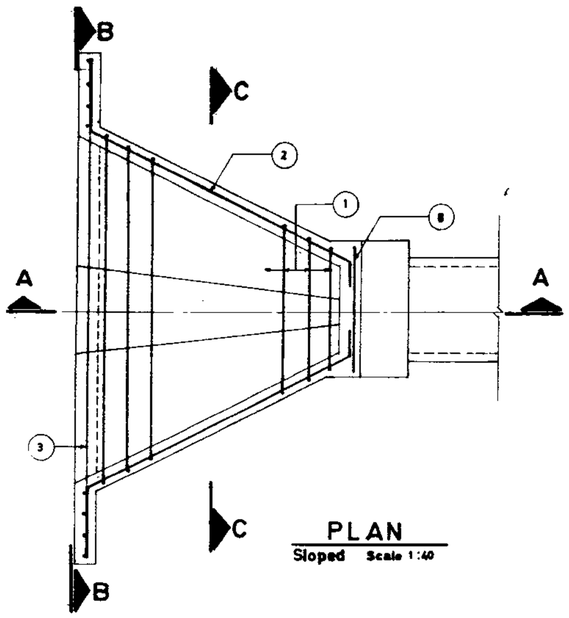

PLAN
Sloped Scale 1:40

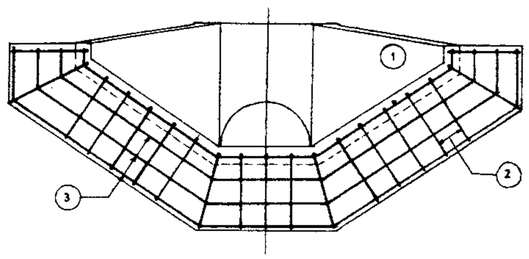

SECTION B-B
Scale 1:40

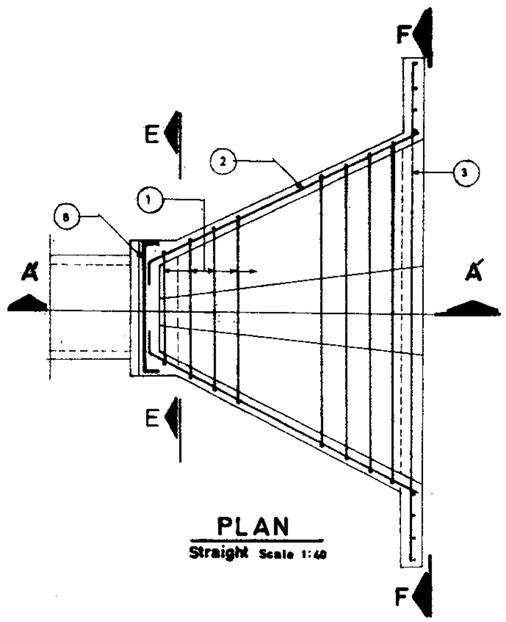

PLAN
Straight Scale 1:40

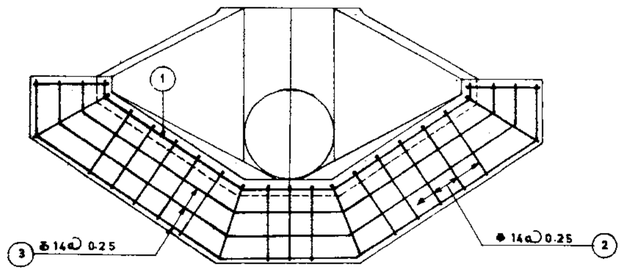

SECTION F-F
Scale 1:40

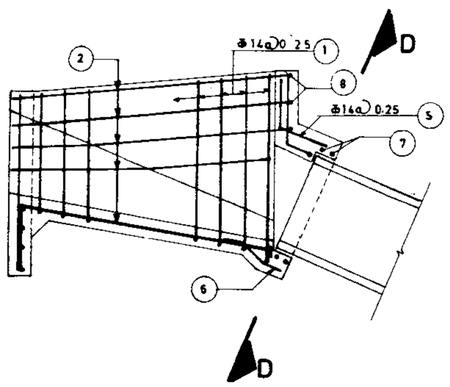

SECTION A-A
Sloped Scale 1:40

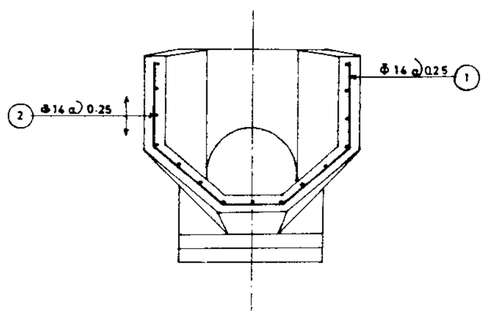

SECTION C-C
Scale 1:40

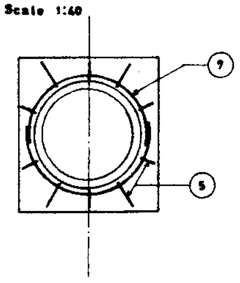

SECTION D-D
Scale 1:40

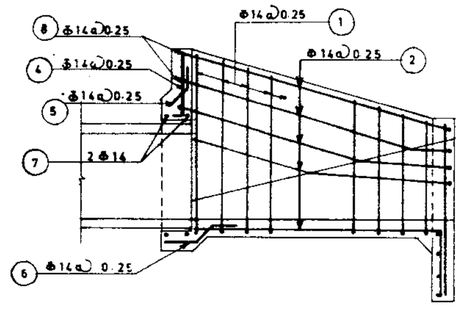

SECTION A'-A'
Straight Scale 1:40

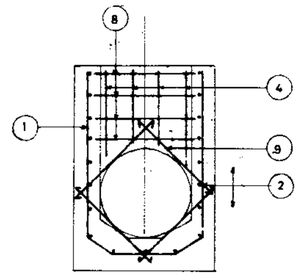

SECTION E-E
Scale 1:40

REFERENCE DWGS: For plan and section see dwg. Nº. 13/6/1/01
For list of reinforcement see dwg. Nº. 13/6/3/02

Scale: 1:40	IRRIGATION & DRAINAGE STANDARDS	
Date:	DWG Nº 13/6/3/01	CONCRETE TRANSITION (TYPE 1) REINFORCEMENT
Approved:	Sheet Nº 2 of 3 Rev. Nº	

ISLAMIC REPUBLIC OF IRAN
MINISTRY OF PLAN & BUDJET
TECHNICAL RESEARCH AND STANDARD BUREAU

omoorepeyman.ir

STR .1 Dia 0.40

Pos	No	FORM	UNIT LENG.	TOTAL LENG.
1	6	0.15 ~1.11 0.24 0.72 0.28~0.71 0.24 0.72 0.15 ~1.11	2.72	16.32
2	12	0.15 0~1.53 0~1.20 0.45	1.97	23.64
3	3	0.33 ~0.11 1.17 1.53 0.77~1.71 1.17 1.53 0.33 ~0.11	4.38	13.14
4	5	0.61 0.10~0.30	0.81	4.05
5	8	0.10~0.40 0.10~0.40	0.51	4.00
6	3	0.30 0.21 0.10	0.61	1.83
7	3	0.40 0.40	2.91	8.73
8	4	0.20 0.67 0.20	1.07	4.28
9	4	0.20 0.41 0.20	0.81	3.24
				79.23

79.23 x 1.21 = 95.87 Kg.

STR .2 Dia 0.50

Pos.	No	FORM	UNIT LENG.	TOTAL LENG.
1	7	0.15 ~1.18 0.32 0.90 0.30~0.85 0.32 0.90 0.15 ~1.18	3.13	21.91
2	15	0.15 0~1.82 0~1.5 0.45	2.26	33.90
3	3	0.33 ~0.11 1.71 1.35 0.91~1.83 1.71 1.35 0.33 ~0.11	4.88	14.64
4	5	0.59 0.10~0.30	0.79	3.95
5	9	0.10~0.30 0.10~0.30	0.50	4.5
6	4	0.30 0.21 0.10	0.61	2.44
7	3	0.40 0.40	3.28	9.84
8	4	0.20 0.77 0.20	1.17	4.68
9	4	0.20 0.48 0.20	0.88	3.52
				99.38

99.38 x 1.21 = 120.25 Kg.

STR .3 Dia 0.60

Pos.	No	FORM	UNIT LENG.	TOTAL LENG.
1	9	0.15 ~1.26 0.38 1.08 0.33~0.99 0.38 1.08 0.15 ~1.26	3.53	31.77
2	16	0.15 0~2.12 0~1.8 0.45	2.50	40.96
3	3	0.33 ~0.11 1.88 1.53 1.05~0.91 1.88 1.53 0.33 ~0.11	4.84	14.52
4	6	0.57 0.10~0.30	0.77	4.62
5	11	0.10~0.40 0.10~0.40	0.50	5.50
6	4	0.30 0.21 0.10	0.61	2.44
7	3	0.40 0.40	3.79	11.37
8	4	0.20 0.91 0.20	1.31	5.24
9	4	0.20 0.57 0.20	0.97	3.88
				120.30

120.30 x 1.21 = 145.56 Kg.

STR .4 Dia 0.70

Pos.	No.	FORM	UNIT LENG.	TOTAL LENG.
1	10	0.15 ~1.34 0.44 1.26 0.36~1.13 0.44 1.26 0.15 ~1.34	3.94	39.40
2	18	0.15 0~2.42 0~2.10 0.65	3.06	55.08
3	3	0.44 0.15 2.25 1.77 1.31~1.09 2.25 1.77 0.44 0.15	5.81	17.43
4	6	0.57 0.10~0.30	0.77	4.62
5	12	0.10~0.30 0.10~0.30	0.50	6.00
6	5	0.30 0.28 0.10	0.73	3.65
7	3	0.40 0.40	4.15	12.45
8	4	0.20 1.01 0.20	1.41	5.64
9	4	0.20 0.64 0.20	1.04	4.16
				148.43

148.43 x 1.21 = 179.60 Kg.

STR .5 Dia 0.80

Pos.	No.	FORM	UNIT LENG.	TOTAL LENG.
1	11	0.15 ~1.41 0.50 1.44 0.39~1.27 0.50 1.44 0.15 ~1.41	4.33	47.63
2	19	0.15 0~2.74 0~2.40 0.65	3.37	64.03
3	3	0.44 0.15 2.45 1.95 1.45~1.23 2.45 1.95 0.44 0.15	6.31	18.93
4	7	0.55 0.10~0.30	0.75	5.25
5	14	0.10~0.40 0.10~0.40	0.50	7.0
6	5	0.30 0.28 0.15	0.73	3.65
7	3	0.40 0.40	4.66	13.98
8	4	0.20 1.15 0.20	1.55	6.2
9	4	0.20 0.74 0.20	1.14	4.56
				171.23

171.23 x 1.21 = 207.19 Kg.

STR .6 Dia 0.90

Pos.	No.	FORM	UNIT LENG.	TOTAL LENG.
1	12	0.15 ~1.49 0.57 1.62 0.40~1.41 0.57 1.62 0.15 ~1.49	4.74	56.88
2	21	0.15 0~3.05 0~2.7 0.65	3.68	77.28
3	3	0.44 0.15 2.61 2.13 1.59~1.37 2.61 2.13 0.44 0.15	6.81	20.43
4	7	0.55 0.10~0.30	0.75	5.25
5	15	0.10~0.30 0.10~0.30	0.50	7.50
6	6	0.30 0.28 0.20	0.78	4.68
7	4	0.40 0.40	5.03	20.12
8	4	0.20 1.35 0.20	1.65	6.60
9	4	0.20 0.81 0.20	1.21	4.84
				203.58

203.58 x 1.21 = 246.33 Kg.

STR .7 Dia 1.00

Pos.	No	FORM	UNIT LENG.	TOTAL LENG.
1	13	0.15~ 1.57 0.63 1.80 0.45~1.45 0.63 1.80 0.15 ~1.57	5.10	66.30
2	22	0.15 0~3.37 0~3.0 0.65	3.99	87.78
3	3	0.44 0.15 2.79 2.31 1.73~1.51 2.79 2.31 0.44 0.15	7.31	21.93
4	7	0.53 0.10~0.30	0.73	5.11
5	17	0.10~0.40 0.10~0.40	0.53	8.50
6	6	0.30 0.28 0.20	0.78	4.68
7	4	0.40 0.40	5.54	22.16
8	4	0.20 1.39 0.20	1.79	7.16
9	4	0.20 0.91 0.20	1.31	5.24
				228.86

228.86 x 1.21 = 276.92 Kg.

ALL BARS ARE Φ14(1.21 kg/m)

REFERENCE DWGS: For reinforcement see dwg. Nº: 13/6/3/01

For bars with variable unit length see note under the same title at dwg.Nº: 20/2/1/01

Scale:	IRRIGATION & DRAINAGE STANDARDS		
Date:	DWG.No. 13/6/3/02	CONCRETE TRANSITION (Type1) LIST OF REINFORCEMENT	
Approved:	Sheet.No. 3 of 3	Rev.No	

ISLAMIC REPUBLIC OF IRAN
MINISTRY OF PLAN & BUDJET
TECHNICAL RESERCH AND
STANDARD BUREAU

omoorepeyman.ir

Structure Description

Transitions are used at structure inlets and outlets or at the change in canal sections for the following purposes:

- Reduce energy loss
- Provide smoother water flow
- Minimize canal erosion
- Provide additional stability to adjacent structures because of the added resistance to percolation
- To retain earth fill at the ends of structures
- Reduce ponded water surface elevations at cross-drainage structures

Classification & Application

Six types of transitions are presented in this publication:

Type 1. or Broken back could be used for in-line canal structures. This type of transition is also used for cross-drainage structures if the natural drainage canal has well-defined cross section with dimensions that reasonably be transitioned to the broken-back cross section.

Type 2. Could be used for cross-drainage structures, where the channel is wide and poorly defined.

Type 3. Could also be used for cross-drainage structures, where the channel is poorly defined, by extending the pool beyond the end of sloping sidewalls, a longer crest result. By lowering the invert, the headwall opening is lowered, resulting lower water surface elevation for the inlet pool.

Type 4. Except for its sloping floor and omission of headwall cutoff, this type of transition is similar to type 3. The sloping floor permits a lower pipe invert at the inlet headwall if type 4 transition is used.

Type 5. This type of transition is sometimes used to transition from a contretelined canal to a pipe structure.

Design Considerations for Pipe Structure Transition

1. Pipe Submergence

1-1. Head losses

Let:

V_c = Flow velocity in canal (m/s)

V_p = Flow velocity at the centerline section of the closed conduit at the headwall (m/s)

Energy losses in transitions could be calculated as follows:

Energy losses at inlet = $K_1(\frac{V_p^2}{2g} - \frac{V_c^2}{2g})$

Energy losses at outlet = $K_2(\frac{V_p^2}{2g} - \frac{V_c^2}{2g})$

For broken-back transition K_1=0.4 and K_2=0.7.

1-2. Friction Losses

Friction losses for short transitions associated with capacities up to 3 m^3/s will be small and are usually omitted.

1-3. Pipe Sumbergence

Inlet transition to pipe structures where the hydraulic control is at the downstream end of the structure should have a seal of $1.5(\frac{V_p^2}{2g} - \frac{V_c^2}{2g})$ but not less than 8 cm.

The seal is measured between the upstream water surface of the inlet transition and the top of the opening in the transition headwall, where an inlet transition connected to a free-flow closed conduit in such a way that the conduit inlet is sealed, the head required to discharge the design flow can be determine by orifice equation.

$$Q = CA\sqrt{2gh}$$

Where:

Q = Discharge (m^3/s)

A = Pipe area (m^2)

h = Head (m) measured from the center of the headwall opening to the inlet water surface.

C = Discharge Coefficient = 0.6

2. Water Surface Angle

Water surface angle is defined; the angle between water surface and transition centerline(θ).

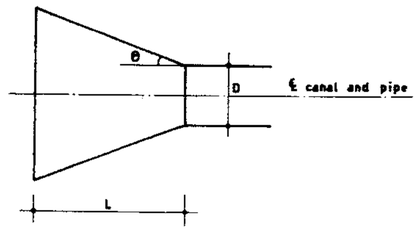

Water surface angle should not exceed $27\frac{1}{2}$ for inlet transition and $22\frac{1}{2}^\circ$ for outlet transition. For some designs it may be more economical to use angle of 25° for either inlet and outlet transition.

3. Channel Erosion

The following criteria should be used to prevent undue channel erosion downstream from a structure outlet:

Pipe Velocity V_p (m/s)	Erosion Protection
$V_p \leq 1$	An earth outlet transition is sufficient
$1 < V_p \leq 3$	An concrete outlet transition should be used
$3 < V_p$	A baffled outlet or stilling pool should be used.

General Notes for Transition Type 2,3 and 4

1. To provide adequate free board for the canal, the inlet water surface for design flow should be at least 0.6 meter below the top of the canal bank.

2. The equation $Q = CA\sqrt{2gh}$ may be used to calculate the inlet water surface required to discharge to design flow.

   h measured from the opening centerline to the water surface and C = 0.6 .

   For free flow the following equation could be used for determining the required head:

   $$h = 0.14206\, V^2$$

   Where V is the design velocity of the pipe in m/s and h is the required head in meter.

omoorepeyman.ir

REFERENCE DWG :

Scale:	IRRIGATION & DRAINAGE STANDARD		ISLAMIC REPUBLIC OF IRAN MINISTRY OF PLAN & BUDJET TECHNICAL RESEARCH AND STANDARD BUREAU
Date:	DWG. № 13/5/1/01	TRANSITION DESCRIPTION AND SELECTION	
Approved:	Sheet № 1 of 1	Rev. №	

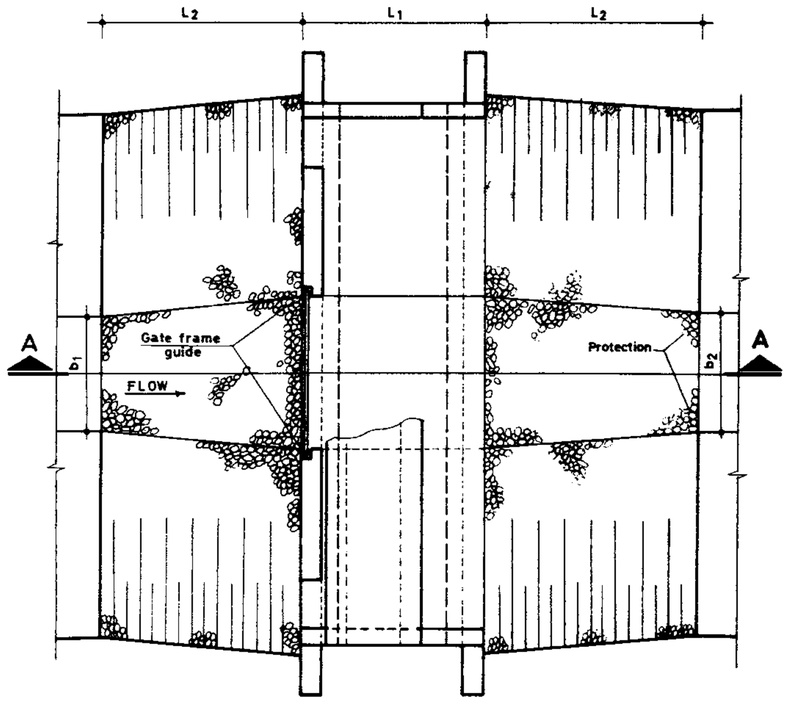

PLAN

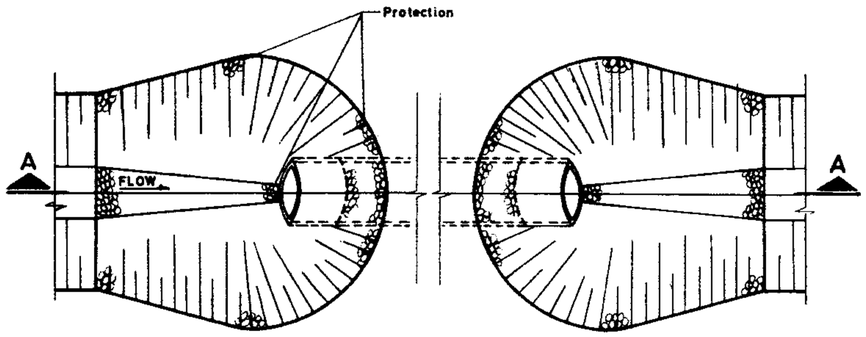

PLAN

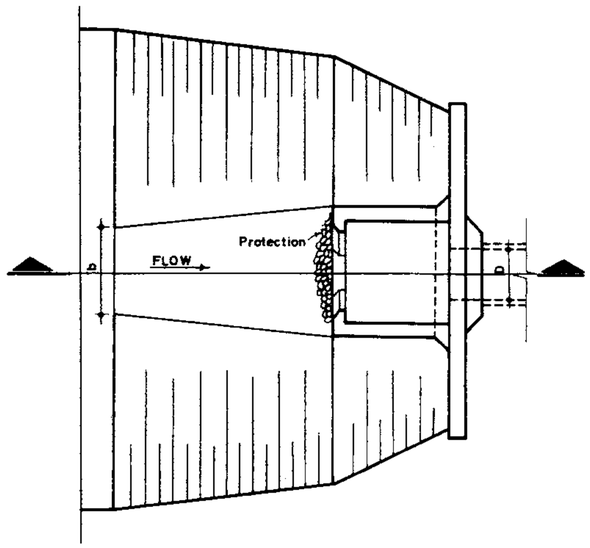

PLAN

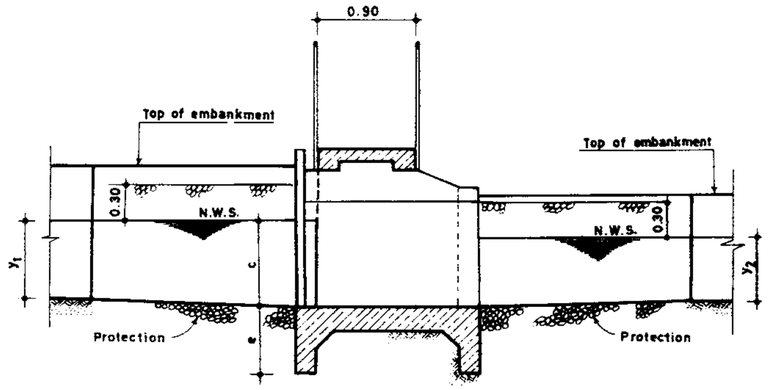

SECTION A-A

CHECK DROP

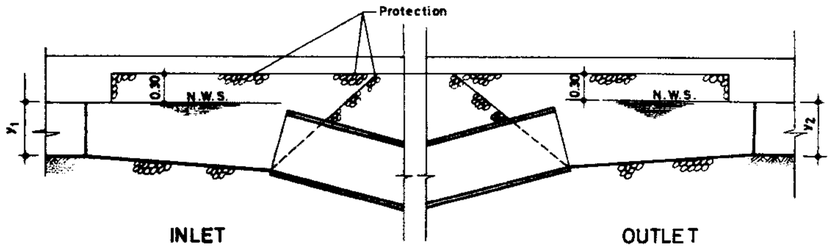

SECTION A-A

PIPE INLET OR OUTLET

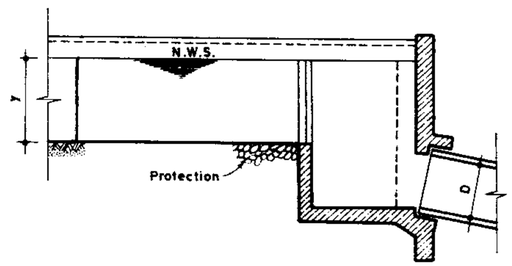

SECTION A-A

CONTROL AND PIPE INLET

REFERENCE DWGS: For construction detail of check structure see dwg. Nº. 12/1/1/02
For erosion protection notes see dwg Nº 13/L/1/01

Scale: N.T.S	IRRIGATION & DRAINAGE STANDARDS		ISLAMIC REPUBLIC OF IRAN MINISTRY OF PLAN & BUDJET TECHNICAL RESEARCH AND STANDARD BUREAU
Date:	DWG. Nº 13/3/1/01	EROSION PROTECTION FOR CHECK DROP, PIPE INLET OR OUTLET, CONTROL AND PIPE INLET	
Approved	Sheet Nº 1 of 1	Rev. Nº	

omoorepeyman.ir

SIZE RANGE OF ROCK TO BE USED FOR EROSION PROTECTION

Type of protection	Protection thickness cm.	Max. size		Min. size	
		d m.	Cm.	d m³	Cm.
1	15	3.5	15	0.001	1
2	30	30	30	0.03	3
3	30	30	30	0.03	3
4	46	100	46	3	15

CROSS DRAINAGE STRUCTURES

Q m³/sec.	Type of protection		
	Inlet	Outlet	Outlet length (m)
0 _ 1	None	Type 2	2.5
1 _ 2	None	Type 2	3.5
2 <	Type 1	Type 3	4.5

Parshall flumes, Checks, Check drops, Chutes, Inclined drops, Check & pipe inlet, Control & pipe inlet, Road crossing, Turnouts, Etc.

Water depth d (m.)	Type of protection	
	Inlet	Outlet
0.60	None	Type 1
0.60 _ 1.00	None	Type 2
1.00 _ 2.00	Type 1	Type 3

TYPE OF PROTECTION

Type 1	15cm. coarse gravel
Type 2	30cm. coarse gravel
Type 3	30cm. riprap on 15 cm. sand and gravel bedding.
Type 4	45cm. riprap on 15 cm. sand and gravel bedding

SIPHONS

Water depth d (m.)	Type of protection		Lenght of protection	
	Inlet	Outlet	Inlet	Outlet
0 _ 0.60	None	None	—	—
0.60 _ 1.00	None	Type 1	—	2.5 depth (1.5m. Min.)
1.00 _ 2.00	Type 1	Type 2	1 depth (1.5m. Min.)	2.5 depth (1.5m. Min.)

NOTES:

1 _ The types of erosion protection shown on various drawings represent minimum thickness and sizes of material to be used, and adjustment should be made to the local conditions.

2 _ 15 Cm. sand and gravel bedding (filter material) for rip rap should be a continuous layer of sand and gravel or sand and crushed rock, reasonably well graded to a max. of 35mm. in size

3 _ Stone protection and filter material shall be placed in a uniform thickness normal to finished grade and to the limits shown on plans and sections.

4 _ Type of stone protection to be used for inlets and outlets of various irrigation and drainage structures shall be selected from the table "type of protection"

5 _ Unless otherwise noted transition length from the end of the conduite to existing channel shall be 3 times. D for inlet and 4 times. D for outlet or determined by the engineer

6 _ Metal guard railing shall be determined by the engineer if required.

7 _ Bottom width at the end of stone protection to be 2.5xH or 2.5xD for drainage culvert and HorD for irrigation culvert or the outside width of the inlet and outlet structures whichever is greater.

8 _ H calls for box and D calls for pipe

REFERENCE DWG:

Scale:

Date:

Approved:

IRRIGATION & DRAINAGE STANDARDS

DWG Nº 13/4/1/01

Sheet Nº 1 of 1 Rev Nº2

EROSION PROTECTION
TYPES . QUANTITIES & NOTES

ISLAMIC REPUBLIC OF IRAN
MINISTRY OF PLAN & BUDJET
TECHNICAL RESEARCH AND
STANDARD BUREAU

amoorepeyman.ir

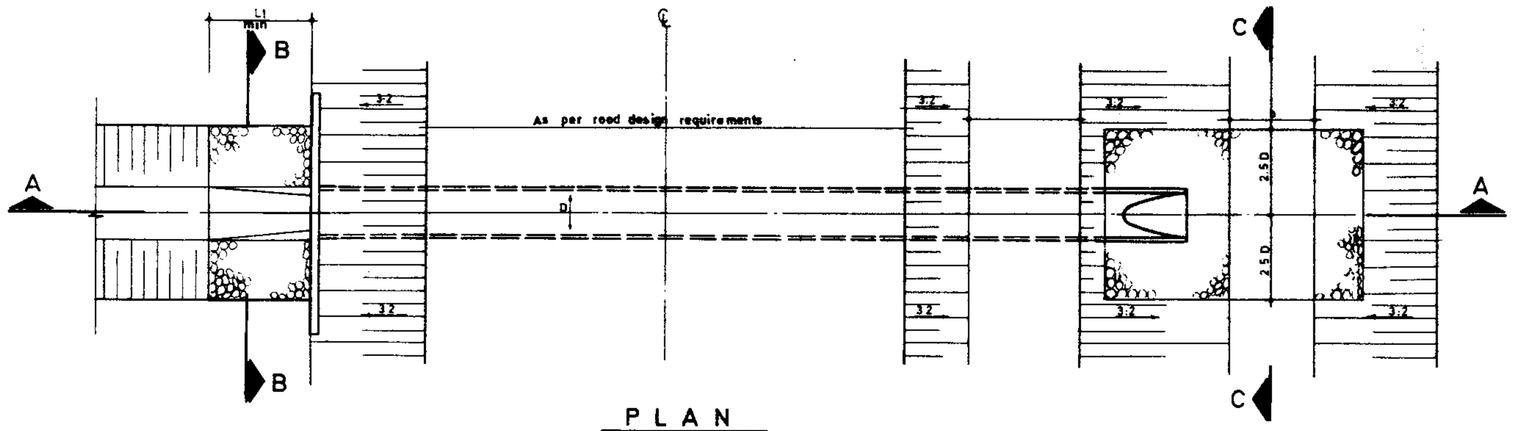

PLAN
Scale: 1:100

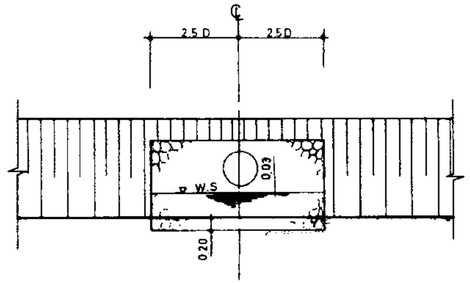

SECTION C_C
Scale 1:100

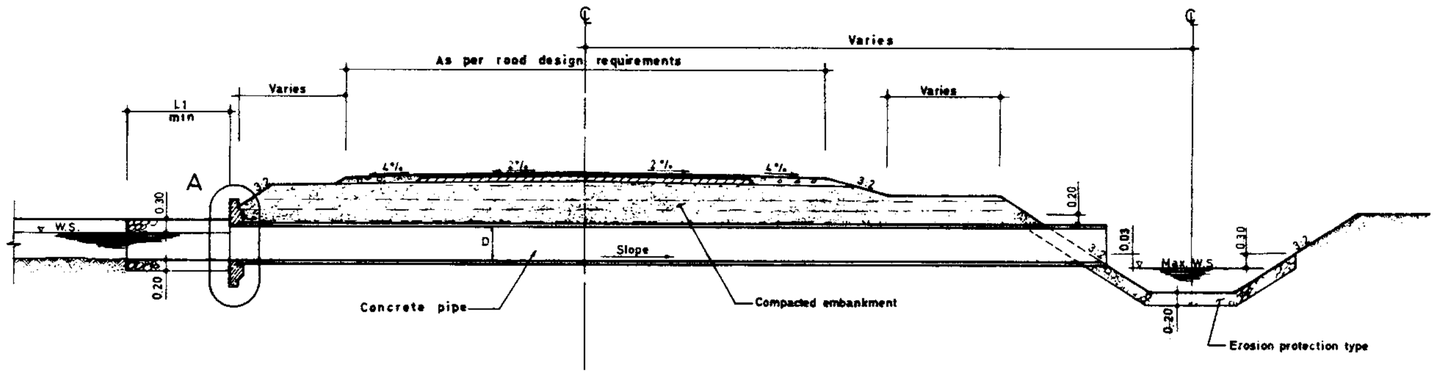

SECTION A_A
Scale: 1:100

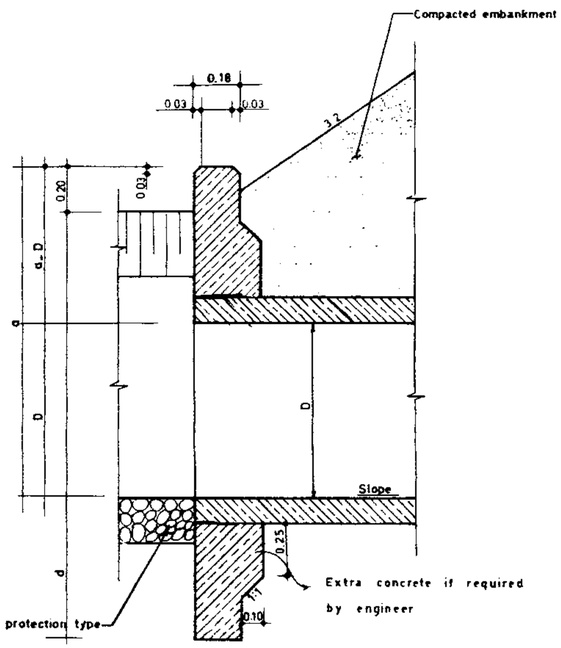

DETAIL A
Scale 1:20

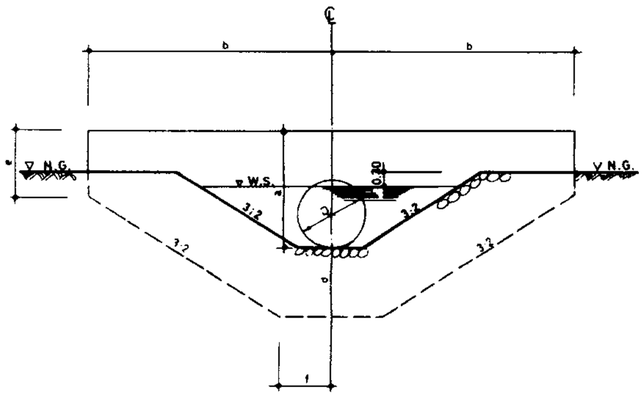

SECTION B_B
Scale: 1:100

CONCRETE HEADWALL DIMENSION TABLE

D cm	a	b	In let c	Out let c	d	e	f
0.30	1.10	2.45	0.60	0.40	0.60	0.30	0.35
0.40	1.20	2.65	0.70	0.55	0.60	0.30	0.40
0.50	1.30	2.85	0.80	0.70	0.60	0.30	0.45
0.60	1.40	3.05	0.90	0.80	0.60	0.30	0.50
0.70	1.50	3.25	1.00	0.95	0.80	0.50	0.55
0.80	1.60	3.45	1.10	1.10	0.80	0.50	0.60
0.90	1.70	3.65	1.20	1.20	0.80	0.50	0.65
1.00	1.80	3.85	1.30	1.30	0.80	0.50	0.70

EROSION PROTECTION DIMENSION TABLE

L_1 m	Type of protection		Q $m^3/Sec.$
	Out let	In let	
–	2	–	0 – 1
–	2	–	1 – 2
1.5	3	1	2

REFERENCE DWGS:
For erosion protection notes see dwg No 13/4/1/01

Scale: 1:100_1:20	IRRIGATION & DRAINAGE STANDARDS	
Date:	DWG.No 13/1/1/01	EROSION PROTECTION FOR CULVERT AND COLLECTOR DRAIN TO PROJECT DRAIN
Approved:	Sheet No 1 of 1 Rev. No	

ISLAMIC REPUBLIC OF IRAN
MINISTRY OF PLAN & BUDJET
TECHNICAL RESEARCH AND STANDARD BUREAU

omoorepeyman.ir

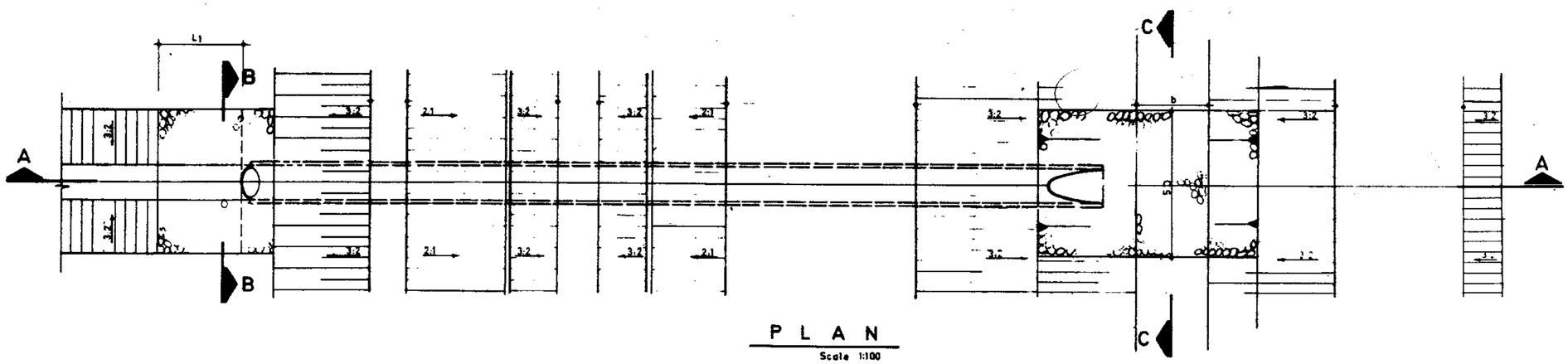

PLAN
Scale 1:100

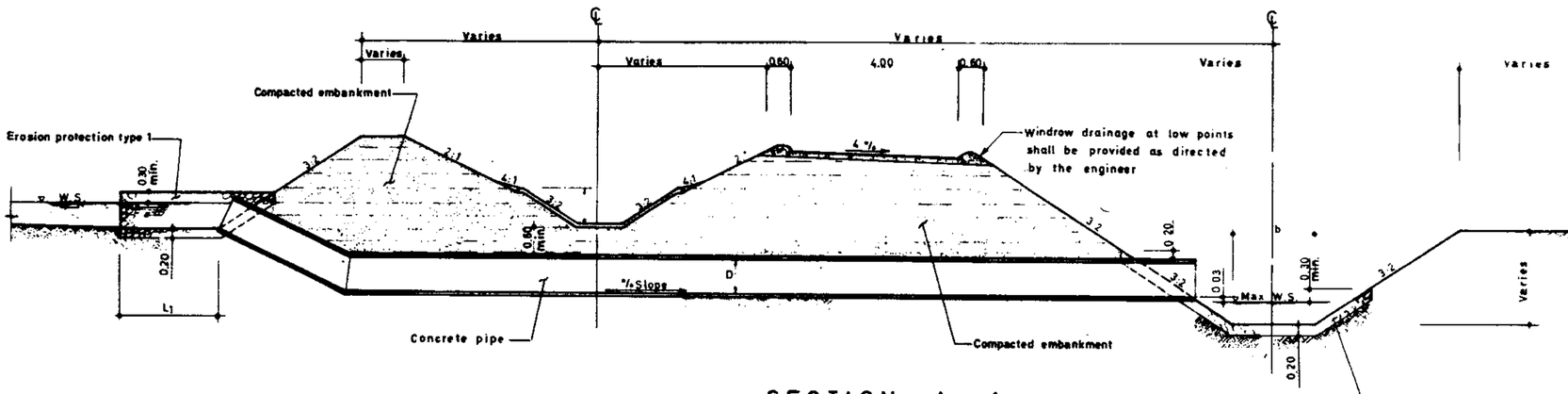

SECTION A_A
Scale 1:100

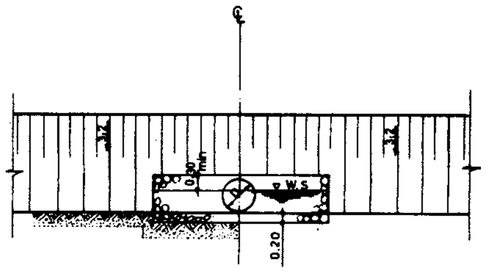

SECTION B_B
Scale 1:100

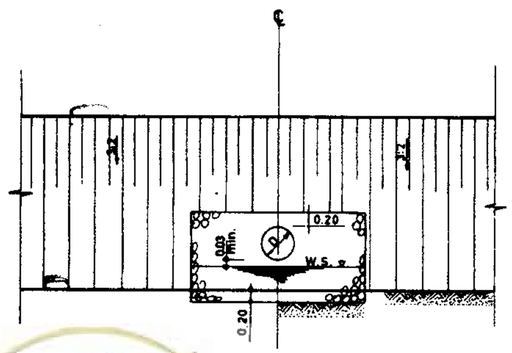

SECTION C_C
Scale 1:100

REFERENCE DWGS:
For erosion protection notes see dwg Nº 13/4/1/01
For pipe drain inlet see dwg Nº 13/13/1/01
For windrow dimension see dwg Nº 19/2/1/01

Scale: 1:100	IRRIGATION & DRAINAGE STANDARDS		ISLAMIC REPUBLIC OF IRAN
Date:	DWG. Nº 13/2/1/01	EROSION PROTECTION FOR CULVERT AND CANAL CROSS DRAINAGE	MINISTRY OF PLAN & BUDJET
Approved:	Sheet Nº 1 of 1	Rev. Nº	TECHNICAL RESEARCH AND STANDARD BUREAU

omoorepeyman.ir

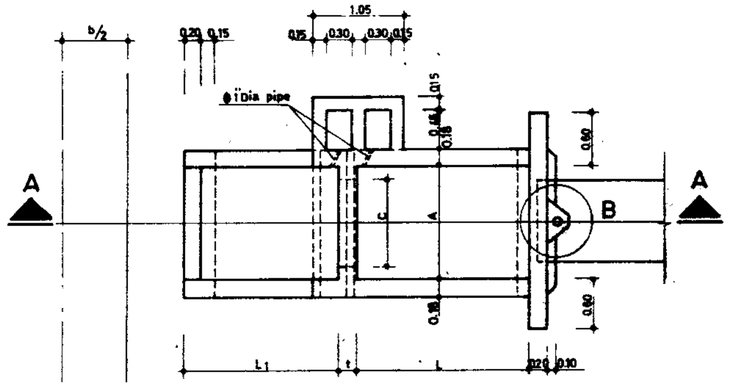

PLAN

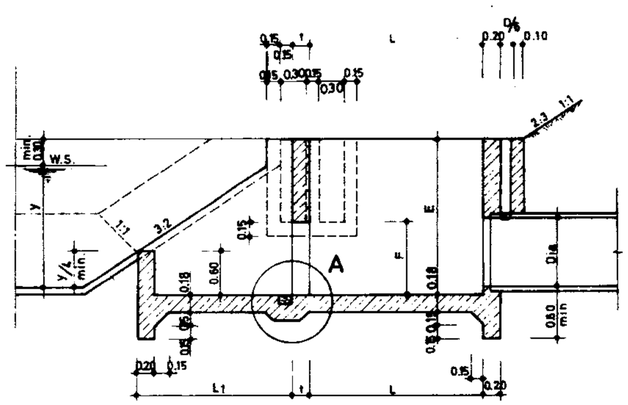

SECTION A-A

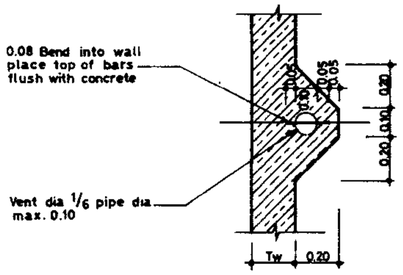

DETAIL B

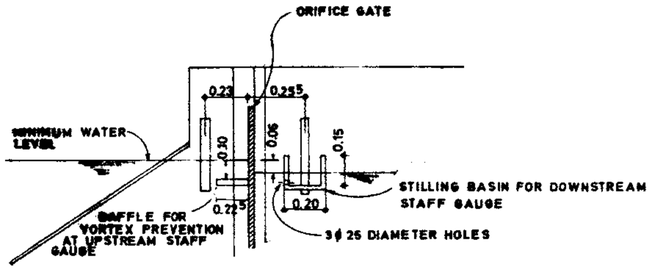

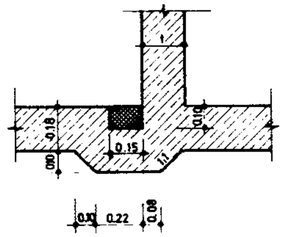

DETAIL A

y_m = Max. gate opening = F

y_t = Gate opening for Q max.

S = Submergence.

Δ_h = Differential head = 0.06 m.

Design consideration:

$$0.75 \leq \frac{y_m}{y_t} \leq 0.80$$

$$S \geq y_m$$

$$X \geq t$$

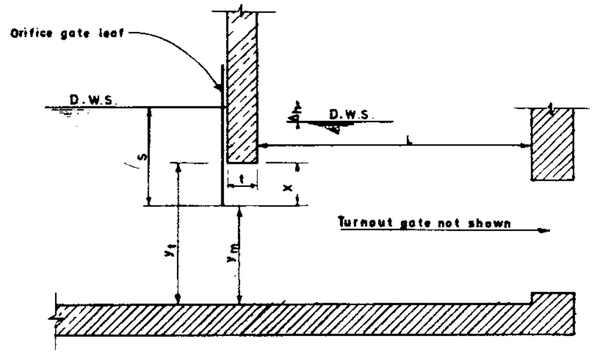

DIMENSION TABLE

Q m^3/s	Dia mm.	Orifice open Cm.	Orifice open Fm.	t m.	L m	L_1 m.	A m	E m	R/Bar. kg.	Conc. m^3	Form. m^2
0.100	300	0.50	0.35	0.10	1.10	1.40	0.70	0.80	264.40	4.17	38.17
0.150	400	0.50	0.50	0.10	1.10	1.40	0.70	1.10	274.68	4.40	38.51
0.200	450	0.60	0.55	0.10	1.10	1.40	0.80	1.20	287.60	4.51	39.07
0.250	500	0.70	0.60	0.10	1.10	1.40	0.90	1.30	277.63	4.39	38.27
0.300	500	0.80	0.65	0.15	1.40	1.60	1.00	1.30	303.60	4.63	40.88
0.350	600	0.85	0.70	0.15	1.50	1.60	1.10	1.40	308.67	4.89	42.07
0.400	600	0.90	0.75	0.15	1.70	1.60	1.20	1.50	323.15	4.95	43.42
0.450	700	0.95	0.80	0.15	1.70	1.80	1.30	1.60	337.37	5.33	45.24
0.500	700	1.00	0.85	0.15	1.90	1.80	1.30	1.60	343.82	5.46	46.08
0.550	700	1.05	0.90	0.15	1.90	1.80	1.40	1.70	351.62	5.59	46.89
0.600	800	1.10	0.90	0.15	2.00	1.80	1.40	1.80	360.35	5.60	47.12
0.650	800	1.15	0.95	0.15	2.00	1.80	1.50	1.80	377.82	5.68	47.55
0.700	800	1.20	1.00	0.15	2.20	1.80	1.50	1.90	374.07	5.77	48.35
0.750	800	1.25	1.00	0.15	2.20	1.80	1.60	1.90	383.16	5.84	48.78
0.800	900	1.35	1.00	0.15	2.20	1.80	1.60	1.90	391.99	5.96	52.17
0.850	900	1.40	1.00	0.15	2.20	1.80	1.70	2.00	390.16	5.96	49.19

REFERENCE DWGS: For reinforcement see dwg Nº 12/9/3/01
For general notes see dwgs Nº 20/2/1/01 TO 20/2/1/03

Scale:	IRRIGATION & DRAINAGE STANDARDS	
Date:	DWG. Nº 12/9/1/01	CONSTANT HEAD ORIFICE (CHO) PLAN & SECTIONS
Approved:	Sheet Nº 1 of 6 Rev. Nº	

ISLAMIC REPUBLIC OF IRAN
MINISTRY OF PLAN & BUDJE
TECHNICAL RESEARCH AND STANDARDS BUREAU

omoorepeyman.ir

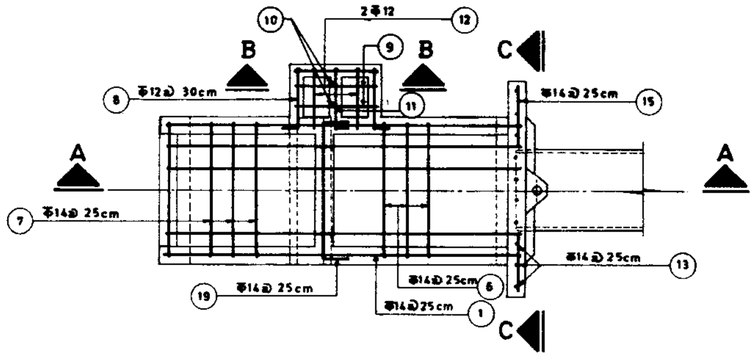

PLAN

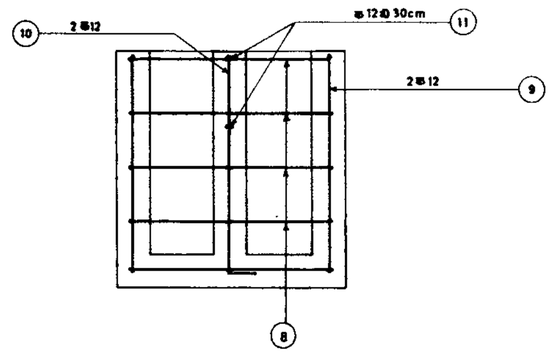

SECTION B-B

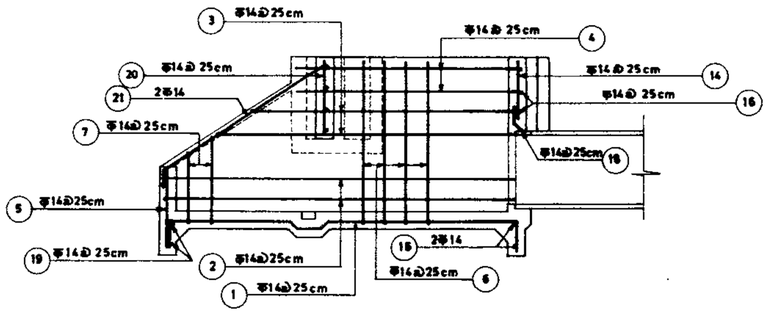

SECTION A-A

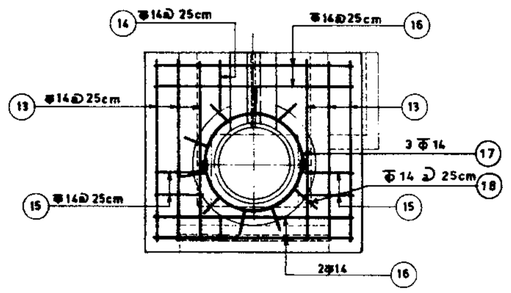

SECTION C-C

REFERENCE DWGS : For plan & section: see dwg Nº 12/9/1/01
For list reinforcem: see dwgs Nº 20/2/1/01 TO 20/2/1/03

Scale:	IRRIGATION & DRAINAGE STANDARDS		
Date:	DWG. Nº 12/9/3/01	CONSTANT HEAD ORIFICE (C-H-O) REINFORCEMENT PLAN & SECTIONS	ISLAMIC REPUBLIC OF IRAN MINISTRY OF PLAN & BUDJET TECHNICAL RESEARCH AND STANDARDS BUREAU
Approved:	Sheet Nº 2 of 6 Rev. Nº		

omoorepeyman.ir

Dia = 300
Q = 0.100

Pos.	Φ	Nº	FORM	UNIT LENG.	TOTAL LENG.	U.W.T kg.	TOTAL weight
1	14	6	0.35 / 2.90 / 0.35; 1.10 0.25	3.60	21.60	1.21	26.14
2	14	4	0.20 / 2.90 / 0.20	3.30	13.20	1.21	15.97
3	14	2x5	1.60 ~ 2.90 / 0.20	2.45	24.50	1.21	29.65
4	14	2x2	1.60 / 0.20	1.80	7.20	1.21	8.71
5	14	6	1.10	1.10	6.60	1.21	7.99
6	14	5	1.85 / 0.91 / 1.85	4.61	23.05	1.21	27.89
7	14	6	0.82 ~ 1.38 / 0.91 / 0.82 ~ 1.38	3.11	18.66	1.21	22.58
8	12	6	0.25 / 0.55 0.90 0.65 / 0.25	2.70	16.20	0.888	14.39
9	12	2	1.49 / 0.90 / 1.49	3.88	7.76	0.888	6.89
10	12	2	1.49 / 0.25	1.74	3.48	0.888	3.09
11	12	6	0.25 / 0.80 / 0.25	1.10	6.60	0.888	5.86
12	12	2	1.45 / 0.65 / 1.45	3.55	7.10	0.888	6.30
13	14	8	2.20	2.20	17.60	1.21	21.30
14	14	2	1.14 ~ 1.42	1.28	2.56	1.21	3.10
15	14	2	0.67 ~ 0.95	0.81	1.62	1.21	1.96
16	14	6	1.80	1.80	10.80	1.21	13.07
17	14	3	0.40 / 0.40	2.99	8.96	1.21	10.86
18	14	8	0.40 / 0.10	0.50	4.00	1.21	4.84
19	14	12	0.25 / 0.98 / 0.25	1.48	17.76	1.21	21.49
20	14	4	1.35	1.35	5.40	1.21	6.53
21	14	2	2.05 / 0.35	2.40	4.80	1.21	5.81
							264.40 kg.

Dia = 400
Q = 0.150

Pos.	Φ	Nº	FORM	UNIT LENG.	TOTAL LENG.	U.W.T kg	TOTAL weight
1	14	6	0.35 / 2.90 / 0.35; 1.10 0.25	3.60	21.60	1.21	26.14
2	14	4	0.20 / 2.90 / 0.20	3.30	13.20	1.21	15.97
3	14	2x5	1.60 ~ 2.90 / 0.20	2.45	24.50	1.21	29.65
4	14	2x2	1.60 / 0.20	1.80	7.20	1.21	8.71
5	14	6	1.10	1.10	6.60	1.21	7.99
6	14	7	1.85 / 1.01 / 1.85	4.71	32.97	1.21	39.89
7	14	6	0.85 ~ 1.38 / 1.01 / 0.85 ~ 1.38	3.21	19.26	1.21	23.30
8	12	5	0.25 / 0.65 0.90 0.65 / 0.25	2.70	13.50	0.888	11.99
9	12	2	1.39 / 0.90 / 1.39	3.68	7.36	0.888	6.54
10	12	2	1.39 / 0.25	1.64	3.28	0.888	2.91
11	12	5	0.25 / 0.60 / 0.25	1.10	5.50	0.888	4.88
12	12	2	1.35 / 0.65 / 1.35	3.35	6.70	0.888	5.95
13	14	8	2.20	2.20	17.60	1.21	21.30
14	14	2	1.13 ~ 1.42	1.28	2.56	1.21	3.10
15	14	2	0.72 ~ 1.00	0.86	1.72	1.21	2.08
16	14	6	1.90	1.90	11.40	1.21	13.79
17	14	3	0.40 / 0.40	3.10	9.30	1.21	11.25
18	14	8	0.40 / 0.10	0.50	4.00	1.21	4.84
19	14	11	0.25 / 1.08 / 0.25	1.58	17.38	1.21	21.03
20	14	5	1.25	1.25	6.25	1.21	7.56
21	14	2	2.05 / 0.35	2.40	4.80	1.21	5.81
							274.68 kg.

Dia = 450
Q = 0.200

Pos.	Φ	Nº	FORM	UNIT LENG.	TOTAL LENG.	U.W.T kg	TOTAL weight
1	14	6	0.35 / 2.90 / 0.35; 1.10 0.25	3.60	21.60	1.21	26.14
2	14	4	0.20 / 2.90 / 0.20	3.30	13.20	1.21	15.97
3	14	2x5	1.60 ~ 2.90 / 0.20	2.45	24.50	1.21	29.65
4	14	2x2	1.60 / 0.20	1.80	7.20	1.21	8.71
5	14	6	1.10	1.10	6.60	1.21	7.99
6	14	7	1.85 / 1.11 / 1.85	4.81	33.67	1.21	40.74
7	14	6	0.82 ~ 1.38 / 1.11 / 0.82 ~ 1.38	3.31	19.86	1.21	24.03
8	12	5	0.25 / 0.65 0.90 0.65 / 0.25	2.70	13.50	0.888	11.99
9	12	2	1.34 / 0.90 / 1.34	3.56	7.16	0.888	6.36
10	12	2	1.34 / 0.25	1.59	3.18	0.888	2.82
11	12	5	0.25 / 0.60 / 0.25	1.10	5.50	0.888	4.88
12	12	2	1.30 / 0.65 / 1.30	3.25	6.10	0.888	5.77
13	14	8	2.20	2.20	17.60	1.21	21.30
14	14	2	1.04 ~ 1.37	1.21	2.42	1.21	2.93
15	14	2	0.72 ~ 1.05	0.86	1.78	1.21	2.15
16	14	5	2.00	2.00	12.00	1.21	14.52
17	14	3	0.40 / 0.40	3.42	10.26	1.21	12.43
18	14	11	0.40 / 0.10	0.50	5.00	1.21	6.05
19	14	11	0.25 / 1.18 / 0.25	1.68	18.48	1.21	22.36
20	14	5	1.18	1.18	5.90	1.21	7.14
21	14	2	2.05 / 0.35	2.40	4.80	1.21	5.81
							287.60 kg.

Dia = 500
Q = 0.250

Pos.	Φ	Nº	FORM	UNIT LENG.	TOTAL LENG.	U.W.T kg	TOTAL weight
1	14	6	0.35 / 2.90 / 0.35; 1.10 0.25	3.60	24.60	1.21	26.14
2	14	4	0.20 / 2.90 / 0.20	3.30	13.20	1.21	15.97
3	14	2x5	1.60 ~ 2.90 / 0.20	2.45	24.50	1.21	29.65
4	14	2x2	1.16 / 0.20	1.80	7.20	1.21	8.71
5	14	6	1.10	1.10	6.60	1.21	7.99
6	14	7	1.85 / 1.11 / 1.85	4.81	33.67	1.21	40.74
7	14	6	0.82 ~ 1.38 / 1.11 / 0.82 ~ 1.38	3.31	19.86	1.21	24.03
8	12	5	0.25 / 0.65 0.90 0.65 / 0.25	2.70	13.50	0.888	11.99
9	12	2	1.24 / 0.90 / 1.24	3.38	6.76	0.888	6.00
10	12	2	1.24 / 0.25	1.49	2.98	0.888	2.65
11	12	5	0.25 / 0.60 / 0.25	1.10	5.50	0.888	4.88
12	12	2	1.20 / 0.65 / 1.20	3.05	6.10	0.888	5.42
13	14	8	2.20	2.20	17.60	1.21	21.30
14	14	2	0.94 ~ 1.32	1.13	2.26	1.21	2.73
15	14	2	0.67 ~ 1.05	0.86	1.72	1.21	2.08
16	14	5	2.00	2.00	10.00	1.21	12.10
17	14	3	0.40 / 0.40	3.79	11.37	1.21	13.76
18	14	11	0.40 / 0.10	0.50	5.50	1.21	6.66
19	14	11	0.25 / 1.18 / 0.25	1.68	18.48	1.21	22.36
20	14	5	1.10	1.10	5.50	1.21	6.66
21	14	2	2.05 / 0.35	2.40	4.80	1.21	5.81
							277.63 kg.

REFERENCE DWGS: For reinforcement see dwg.Nº 12/9/3/01
For bars with variable unit length see note under the same title at dwg.Nº 20/2/1/01

Scale:	IRRIGATION & DRAINAGE STANDARDS		
Date:	DWG.Nº 12/9/3/02		CONSTANT HEAD ORIFICE (CHO) LIST OF REINFORCEMENT Dia 300 TO Dia 500
Approved:	Sheet.Nº 3 of 6	Rev. Nº	

ISLAMIC REPUBLIC OF IRAN
MINISTRY OF PLAN & BUDJET
TECHNICAL RESEARCH AND STANDARD BUREAU

omoorepeyman.ir

Dia = 500
Q = 0.300

Pos	ф	N°	FORM	UNIT LENG.	TOTAL LENG.	U.W.T kg	TOTAL weight
1	14	7	0.35 3.20 0.25 / 1.30 0.25	3.90	27.30	1.21	33.03
2	14	4	0.20 3.20 0.20	3.60	14.40	1.21	17.42
3	14	2x5	1.90~3.20 0.20	2.75	27.50	1.21	33.28
4	14	2x2	1.90 0.20	2.10	8.40	1.21	10.16
5	14	7	1.10	1.10	7.70	1.21	9.32
6	14	8	1.85 1.21 1.85	4.91	39.28	1.21	47.53
7	14	8	0.82~1.38 0.82~1.38	3.41	20.46	1.21	24.76
8	12	5	0.25 0.65 0.90 0.65 0.25	2.70	13.50	0.888	11.99
9	12	2	1.19 0.90 1.19	3.28	6.56	0.888	5.83
10	12	2	1.19 0.25	1.44	2.88	0.888	2.56
11	12	5	0.25 0.60 0.25	1.10	5.50	0.888	4.88
12	12	2	1.15 0.65 1.15	2.95	5.90	0.888	5.24
13	14	8	2.20	2.20	15.40	1.21	18.63
14	14	3	0.80~1.25	1.03	3.09	1.21	3.74
15	14	3	0.65~1.10	0.33	2.64	1.21	3.19
16	14	5	2.10	2.10	10.50	1.21	12.71
17	14	3	0.40 0.40	4.30	12.90	1.21	15.61
18	14	13	0.40 0.10	0.50	6.50	1.21	7.87
19	14	11	0.25 1.28 0.25	1.78	19.58	1.21	23.69
20	14	5	1.05	1.05	5.25	1.21	6.35
21	14	2	0.35 2.05	2.40	4.80	1.21	5.81
							303.60 kg.

Dia =600
Q = 0.350

Pos	ф	N°	FORM	UNIT LENG.	TOTAL LENG.	U.W.T kg	TOTAL weight
1	14	7	0.35 3.20 0.35 / 1.30 0.25	3.90	27.30	1.21	33.03
2	14	4	0.20 3.20 0.20	3.60	14.40	1.21	17.42
3	14	2x5	1.90~3.20 0.20	2.75	27.50	1.21	33.28
4	14	2x2	1.90 0.20	2.10	8.40	1.21	10.16
5	14	7	1.10	1.10	7.70	1.21	9.32
6	14	8	1.85 1.31 1.85	5.01	40.08	1.21	48.50
7	14	6	0.82~1.38 0.82~1.38	3.51	21.06	1.21	25.48
8	12	5	0.25 0.65 0.90 0.65 0.25	2.70	13.50	0.888	11.99
9	12	2	1.19 0.90 1.19	3.28	6.56	0.888	5.83
10	12	2	1.19 0.25	1.44	2.88	0.888	2.56
11	12	5	0.25 0.60 0.25	1.10	5.50	0.888	4.88
12	12	2	1.15 0.65 1.15	2.95	5.90	0.888	5.24
13	14	7	2.20	2.20	15.40	1.21	18.63
14	14	3	0.80~1.25	1.03	3.09	1.21	3.74
15	14	3	0.70~1.15	0.93	2.79	1.21	3.38
16	14	5	2.20	2.20	15.40	1.21	13.31
17	14	3	0.40 0.40	4.30	12.90	1.21	15.60
18	14	13	0.40 0.10	0.50	6.50	1.21	7.87
19	14	11	0.25 1.35 0.25	1.88	20.68	1.21	25.02
20	14	6	1.05	1.05	6.30	1.21	7.62
21	14	2	0.35 2.05	2.40	4.80	1.21	5.81
							308.67kg.

Dia =600
Q=0.400

Pos	ф	N°	FORM	UNIT LENG.	TOTAL LENG.	U.W.T kg	TOTAL weight
1	14	7	0.35 3.50 0.35 / 1.30 0.25	4.20	29.40	1.21	35.57
2	14	4	0.20 3.50 0.20	3.90	15.60	1.21	18.88
3	14	2x5	2.20~3.50 0.20	3.05	30.50	1.21	36.91
4	14	2x2	2.20 0.20	2.40	9.60	1.21	11.62
5	14	7	1.10	1.10	7.70	1.21	9.32
6	14	9	1.85 1.31 1.85	5.01	45.09	1.21	54.56
7	14	6	0.82~1.38 1.31 0.82~1.38	3.51	21.06	1.21	25.48
8	12	5	0.25 0.65 0.90 0.65 0.25	2.70	13.50	0.888	11.99
9	12	2	1.09 0.90 1.09	3.08	6.16	0.888	5.47
10	12	2	1.09 0.25	1.34	2.68	0.888	2.38
11	12	4	0.25 0.60 0.25	1.10	4.40	0.888	3.91
12	12	2	1.05 0.65 1.05	2.75	5.50	0.888	4.88
13	14	8	2.20	2.20	17.60	1.21	21.30
14	14	3	0.70~1.20	0.95	2.85	1.21	3.45
15	14	3	0.85~1.15	0.90	2.70	1.21	3.27
16	14	5	2.20	2.20	11.00	1.21	1331
17	14	3	0.40 0.40	4.66	13.98	1.21	16.92
18	14	14	0.40 0.10	0.50	7.00	1.21	8.47
19	14	10	0.25 1.38 0.25	1.88	18.80	1.21	22.75
20	14	6	0.95	0.95	5.70	1.21	6.90
21	14	2	0.35 2.05	2.40	4.80	1.21	5.81
							323.15 kg.

Dia = 700
Q=0.450

Pos	ф	N°	FORM	UNIT LENG.	TOTAL LENG.	U.W.T kg	TOTAL weight
1	14	8	0.35 3.50 0.35 / 1.50 0.25	4.20	33.60	1.21	40.66
2	14	4	0.20 3.50 0.20	3.90	15.60	1.21	18.88
3	14	2x5	2.20 ~ 3.50 0.20	3.05	30.50	1.21	36.91
4	14	2x2	2.20 0.20	2.40	9.60	1.21	11.62
5	14	8	1.10	1.10	8.80	1.21	10.65
6	14	9	1.85 1.51 1.85	5.21	46.89	1.21	56.74
7	14	6	0.82~1.38 1.51 0.82~1.38	3.71	22.26	1.21	26.93
8	12	4	0.25 0.65 0.90 0.65 0.25	2.70	10.80	0.888	9.59
9	12	2	1.09 0.90 1.09	3.08	6.16	0.888	5.47
10	12	2	1.09 0.25	1.34	2.68	0.888	2.38
11	12	4	0.25 0.60 0.25	1.10	4.40	0.888	3.91
12	12	2	1.05 0.65 1.05	2.75	5.50	0.888	4.88
13	14	8	2.20	2.20	17.60	1.21	21.30
14	14	3	0.70~1.20	0.95	2.85	1.21	3.45
15	14	3	0.75~1.25	1.00	3.00	1.21	3.63
16	14	5	2.40	2.40	12.00	1.21	14.52
17	14	3	0.40 0.40	4.30	12.90	1.21	15.60
18	14	13	0.40 0.10	0.50	6.50	1.21	7.87
19	14	11	0.25 1.58 0.25	2.08	22.88	1.21	27.68
20	14	7	1.05	1.05	7.35	1.21	8.89
21	14	2	0.35 2.05	2.40	4.80	1.21	5.81
							337.37 kg.

REFERENCE DWGS: For reinforcement see dwg.N°.12/9/3/01
For bars with variable unit length see note under the same title at dwg.N°.20/2/101

Scale:	IRRIGATION & DRAINAGE STANDARDS		
Date:	DWG.N° 12/9/3/03		CONSTANT HEAD ORIFICE (CHO) LIST OF REINFORCEMENT Dia 500 to Dia 700
Approved.	Sheet.N° 4 of 6	Rev. N°	

ISLAMIC REPUBLIC OF IRAN
MINISTRY OF PLAN & BUDJET
TECHNICAL RESEARCH AND STANDARD BUREAU

omoorepeyman.ir

Dia = 700
Q = 0.500

Pos	ϕ	Nº	FORM	UNIT LENG.	TOTAL LENG.	U.W.T kg.	TOTAL weight
1	14	8	0.35 | 1.50 0.25 3.70 | 0.35	4.40	35.20	1.21	42.59
2	14	4	0.20 | 3.70 | 0.20	4.10	14.40	1.21	19.84
3	14	2x5	2.40 ~ 3.70 | 0.20	3.25	32.50	1.21	39.33
4	14	2x2	2.40 | 0.20	2.60	10.40	1.21	12.58
5	14	8	1.10	1.10	8.80	1.21	10.65
6	14	10	1.85 | 1.51 | 1.85	5.21	52.10	1.21	63.04
7	14	6	0.82 ~ 1.38 | 0.82 ~ 1.38	3.71	22.26	1.21	26.93
8	12	4	0.25 0.65 0.90 0.65 0.25	2.70	10.80	0.888	9.59
9	12	2	0.99 0.90 0.99	2.88	5.76	0.888	5.11
10	12	2	0.99 | 0.25	1.24	2.48	0.888	2.20
11	12	4	0.25 0.60 0.25	1.10	4.40	0.888	3.91
12	12	2	0.95 0.85 0.95	2.55	5.10	0.888	4.53
13	14	8	2.20	2.20	17.60	1.21	21.30
14	14	3	0.70 ~ 1.20	0.95	2.85	1.21	3.45
15	14	3	0.75 ~ 1.25	1.00	3.00	1.21	3.63
16	14	5	2.40	2.40	12.00	1.21	14.52
17	14	3	0.40 ◯ 0.40	4.30	12.90	1.21	15.60
18	14	13	0.40 \ 0.10	0.50	6.50	1.21	7.87
19	14	10	0.25 | 1.58 | 0.25	2.08	20.80	1.21	25.17
20	14	6	0.85	0.85	5.10	1.21	6.17
21	14	2	0.35 / 2.05	2.40	4.80	1.21	5.81
							343.82 kg

Dia = 700
Q = 0.550

Pos	ϕ	Nº	FORM	UNIT LENG.	TOTAL LENG.	U.W.T Kg	TOTAL weight
1	14	8	0.35 | 1.50 0.25 3.70 | 0.35	4.40	35.20	1.21	42.59
2	14	4	0.20 | 3.70 | 0.20	4.10	16.40	1.21	19.84
3	14	2x5	2.40 ~ 3.70 | 0.20	3.25	32.50	1.21	39.33
4	14	2x2	2.40 | 0.20	2.60	10.40	1.21	12.58
5	14	8	1.10	1.10	8.80	1.21	10.65
6	14	10	1.85 | 1.61 | 1.85	5.31	53.10	1.21	64.25
7	14	6	0.82 ~ 1.38 | 0.82 ~ 1.38	3.81	22.86	1.21	27.66
8	12	4	0.99 0.65 0.90 0.65 0.99	2.70	10.80	0.888	9.59
9	12	2	0.99 0.90 0.99	2.88	5.76	0.888	5.11
10	12	2	0.99 | 0.25	1.24	2.48	0.888	2.20
11	12	4	0.25 0.60 0.25	1.10	4.40	0.888	3.91
12	12	2	0.95 0.85 0.95	2.55	5.10	0.888	4.53
13	14	8	2.20	2.20	17.60	1.21	21.30
14	14	4	0.60 ~ 1.15	0.88	3.52	1.21	4.26
15	14	4	0.75 ~ 1.30	1.03	4.12	1.21	4.99
16	14	4	2.50	2.50	10.00	1.21	12.10
17	14	3	0.40 ◯ 0.40	5.03	15.09	1.21	18.26
18	14	15	0.40 \ 0.10	0.50	7.50	1.21	9.08
19	14	10	0.25 | 1.68 | 0.25	2.18	21.80	1.21	26.38
20	14	7	0.85	0.85	5.95	1.21	7.20
21	14	2	0.35 / 2.05	2.40	4.80	1.21	5.81
							351.62 kg

Dia=800
Q=0.600

Pos	ϕ	Nº	FORM	UNIT LENG.	TOTAL LENG.	U.W.T kg	TOTAL weight
1	14	8	0.35 | 1.50 0.25 3.80 | 0.35	4.60	36.00	1.21	43.56
2	14	4	0.20 | 3.80 | 0.20	4.20	16.80	1.21	20.33
3	14	2x5	2.50 ~ 3.80 | 0.20	3.35	33.35	1.21	40.54
4	14	2x2	2.70 | 0.20	2.70	10.80	1.21	13.07
5	14	8	1.10	1.10	8.80	1.21	10.65
6	14	11	1.85 | 1.61 | 1.85	5.31	58.41	1.21	70.68
7	14	6	0.82 ~ 1.38 | 0.82 ~ 1.38	3.81	22.86	1.21	27.66
8	12	4	0.25 0.65 0.90 0.65 0.25	2.70	10.80	0.888	9.59
9	12	2	0.94 0.90 0.94	2.78	5.56	0.888	4.94
10	12	2	0.94 | 0.25	1.19	2.38	0.888	2.11
11	12	4	0.25 0.60 0.25	1.10	4.40	0.888	3.91
12	12	2	0.90 0.85 0.90	2.45	4.90	0.888	4.35
13	14	8	2.20	2.20	17.60	1.21	21.30
14	14	4	0.60 ~ 1.15	0.88	3.52	1.21	4.26
15	14	4	0.75 ~ 1.30	1.03	4.12	1.21	4.99
16	14		2.50	2.50	10.00	1.21	12.10
17	14	3	0.40 ◯ 0.40	5.03	15.09	1.21	18.26
18	14	15	0.40 \ 0.10	0.50	7.50	1.21	9.08
19	14	10	0.25 | 1.68 | 0.25	2.18	21.80	1.21	26.38
20	14	7	0.80	0.80	5.60	1.21	6.78
21	14	2	0.35 / 2.05	2.40	4.80	1.21	5.81
							360.35kg

Dia = 800
Q = 650

Pos	ϕ	Nº	FORM	UNIT LENG.	TOTAL LENG.	U.W.T kg	TOTAL weight
1	14	9	0.35 | 1.50 0.25 3.80 | 0.35	4.50	40.50	1.21	49.01
2	14	4	0.20 | 3.80 | 0.20	4.20	16.80	1.21	20.33
3	14	2x5	2.50 ~ 3.80 | 0.20	3.35	33.50	1.21	40.54
4	14	2x2	2.70 | 0.20	2.70	10.80	1.21	13.07
5	14	9	1.10	1.10	9.90	1.21	11.98
6	14	11	1.85 | 1.71 | 1.85	5.41	59.51	1.21	72.01
7	14	6	0.82 ~ 1.38 | 0.82 ~ 1.38	3.91	23.46	1.21	28.39
8	12	4	0.25 0.65 0.90 0.65 0.25	2.70	10.80	0.888	9.59
9	12	2	0.94 0.90 0.94	2.78	5.56	0.888	4.94
10	12	2	0.94 | 0.25	1.19	2.38	0.888	2.11
11	12	4	0.25 0.60 0.25	1.10	4.40	0.888	3.91
12	12	2	0.90 0.65 0.90	2.45	4.90	0.888	4.35
13	14	8	2.20	2.20	17.60	1.21	21.30
14	14	6	0.46 ~ 1.08	0.77	4.62	1.21	5.59
15	14	6	0.93 ~ 1.35	1.04	6.24	1.21	7.55
16	14	4	2.60	2.60	10.40	1.21	12.58
17	14	3	0.40 ◯ 0.40	5.54	16.61	1.21	20.10
18	14	17	0.40 \ 0.10	0.50	8.50	1.21	10.29
19	14	10	0.25 | 1.78 | 0.25	2.28	22.80	1.21	27.59
20	14	7	0.80	0.80	5.60	1.21	6.78
21	14	2	0.35 / 2.05	2.40	4.80	1.21	5.81
							377.82 kg

REFERENCE DWGS: For reinforcement see dwg Nº 12/9/3/01
For bars with variable unit length see note under the same title at dwg.Nº 20/2/1/01

Scale:	IRRIGATION & DRAINAGE STANDARDS		
Date:	DWG.Nº 12/9/3/04		CONSTANT HEAD ORIFICE (CHO) LIST OF REINFORCEMENT Dia 700 TO Dia 800
Approved:	Sheet Nº 5 of 6	Rev. Nº	

ISLAMIC REPUBLIC OF IRAN
MINISTRY OF PLAN & BUDJET
TECHNICAL RESEARCH AND STANDARD BUREAU

omoorepeyman.ir

Dia = 800
Q = 0.700

Pos	ф	№	FORM	UNIT LENG.	TOTAL LENG.	U.W.T kg.	TOTAL weight
1	14	9	0.35 / 4.00 / 0.35; 1.50 0.25	4.70	42.30	1.21	51.18
2	14	4	0.20 / 4.00 / 0.20	4.40	17.60	1.21	21.30
3	14	2x5	2.70 ~ 4.00 / 0.20	3.35	33.50	1.21	40.54
4	14	2x2	2.70 / 0.20	2.90	11.60	1.21	14.04
5	14	9	1.10	1.10	9.90	1.21	11.98
6	14	11	1.85 / 1.71 / 1.85	5.41	59.51	1.21	72.01
7	14	6	0.82 ~ 1.38 / 1.71 / 0.82 ~ 1.38	3.91	23.46	1.21	28.39
8	12	3	0.25 0.65 0.90 0.65 0.25	2.70	8.10	0.888	7.19
9	12	2	0.84 / 0.90 / 0.84	2.58	5.16	0.888	4.58
10	12	2	0.84 / 0.25	1.09	2.18	0.888	1.94
11	12	3	0.25 / 0.60 / 0.25	1.10	330	0.888	2.93
12	12	2	0.80 / 0.65 / 0.80	2.25	4.50	0.888	4.00
13	14	8	2.20	2.20	17.60	1.21	21.30
14	14	6	0.46 ~ 1.08	0.77	4.62	1.21	5.59
15	14	6	0.73 ~ 1.35	1.04	6.24	1.21	7.55
16	14	4	2.60	2.60	10.40	1.21	12.58
17	14	3	0.60 / 0.40	5.54	16.61	1.21	20.10
18	14	17	0.40 / 0.10	0.50	8.50	1.21	10.29
19	14	9	0.25 / 1.78 / 0.25	2.28	20.52	1.21	24.83
20	14	7	0.70	0.70	4.90	1.21	5.93
21	14	2	2.05 / 0.35	2.40	4.80	1.21	5.81
							374.07 kg.

Dia = 800
Q = 0.750

Pos	ф	№	FORM	UNIT. LENG.	TOTAL LENG.	U.W.T kg	TOTAL weight
1	14	9	0.35 / 3.90 / 0.35; 1.50 0.25	4.60	41.40	1.21	50.09
2	14	4	0.20 / 3.90 / 0.20	4.30	17.20	1.21	20.81
3	14	2x5	2.60 ~ 3.90 / 0.20	3.45	34.50	1.21	41.75
4	14	2x2	2.60 / 0.20	2.80	11.20	1.21	13.55
5	14	9	1.10	1.10	9.90	1.21	11.98
6	14	11	1.85 / 1.81 / 1.85	5.51	60.61	1.21	73.34
7	14	6	0.82 ~ 1.38 / 1.81 / 0.82 ~ 1.38	4.01	24.06	1.21	29.11
8	12	4	0.25 0.65 0.90 0.65 0.25	2.70	10.80	0.888	9.59
9	12	2	0.89 / 0.90 / 0.89	2.68	5.36	0.888	4.76
10	12	2	0.89 / 0.25	1.14	2.28	0.888	2.02
11	12	4	0.25 / 0.60 / 0.25	1.10	4.40	0.888	3.91
12	12	2	0.85 / 0.65 / 0.85	2.35	4.70	0.888	4.17
13	14	10	2.20	2.20	22.00	1.21	26.62
14	14	4	0.46 ~ 1.08	0.77	3.08	1.21	3.73
15	14	4	0.78 ~ 1.40	1.09	4.36	1.21	5.28
16	14	4	2.70	2.70	10.80	1.21	13.07
17	14	3	0.40 / 0.40	5.54	16.61	1.21	20.10
18	14	17	0.40 / 0.10	0.50	8.50	1.21	10.29
19	14	9	0.25 / 1.88 / 0.25	2.30	21.42	1.21	25.92
20	14	8	0.75	0.75	6.00	1.21	7.26
21	14	2	2.05 / 0.35	2.40	4.80	1.21	5.81
							383.16 kg.

Dia = 900
Q = 0.800

Pos	ф	№	FORM	UNIT LENG.	TOTAL LENG.	U.W.T kg	TOTAL weight
1	14	9	0.35 / 4.10 / 0.35; 1.50 0.25	4.80	43.20	1.21	52.27
2	14	4	0.20 / 4.10 / 0.20	4.50	18.00	1.21	21.78
3	14	2x5	2.80 ~ 4.10 / 0.20	3.65	36.50	1.21	44.17
4	14	2x2	2.80 / 0.20	3.00	12.00	1.21	14.52
5	14	9	1.10	1.10	9.90	1.21	11.98
6	14	12	1.85 / 1.81 / 1.85	5.51	66.12	1.21	80.01
7	14	6	0.82 ~ 1.38 / 0.82 ~ 1.38	4.01	24.06	1.21	29.11
8	12	3	0.25 0.65 0.90 0.65 0.25	2.70	8.10	0.888	7.19
9	12	2	0.84 / 0.90 / 0.84	2.58	5.16	0.888	4.58
10	12	2	0.84 / 0.25	1.09	2.18	0.888	1.94
11	12	3	0.25 / 0.60 / 0.25	1.10	3.30	0.888	2.93
12	12	2	0.80 / 0.65 / 0.80	2.25	4.50	0.888	4.00
13	14	10	2.20	2.20	22.00	1.21	26.62
14	14	4	0.46 ~ 1.08	0.77	3.08	1.21	3.73
15	14	4	0.78 ~ 1.40	1.09	4.36	1.21	5.28
16	14	4	2.70	2.70	10.80	1.21	13.07
17	14	3	0.40 / 0.40	5.54	16.61	1.21	20.10
18	14	17	0.40 / 0.10	0.50	8.50	1.21	10.29
19	14	9	0.25 / 1.88 / 0.25	2.38	21.42	1.21	25.92
20	14	8	0.70	0.70	5.60	1.21	6.78
21	14	2	2.05 / 0.35	2.40	4.80	1.21	5.81
							391.99 kg.

Dia = 900
Q = 0.850

Pos	ф	№	FORM	UNIT LENG.	TOTAL LENG.	U.W.T kg	TOTAL weight
1	14	10	0.35 / 4.00 / 0.35; 1.50 0.25	4.70	47.00	1.21	56.87
2	14	4	0.20 / 4.00 / 0.20	4.40	17.60	1.21	21.30
3	14	2x5	2.70 ~ 4.00 / 0.20	3.55	35.50	1.21	42.96
4	14	2x2	2.70 / 0.20	2.90	11.60	1.21	14.04
5	14	10	1.10	1.10	11.00	1.21	13.31
6	14	11	1.85 / 1.91 / 1.85	5.61	61.71	1.21	74.67
7	14	6	0.82 ~ 1.38 / 1.91 / 0.82 ~ 1.38	4.11	24.66	1.21	29.84
8	12	3	0.25 0.65 0.90 0.65 0.25	2.70	8.10	0.888	7.19
9	12	2	0.84 / 0.90 / 0.84	2.58	5.16	0.888	4.58
10	12	2	0.84 / 0.25	1.09	2.18	0.888	1.94
11	12	3	0.25 / 0.60 / 0.25	1.10	3.30	0.888	2.93
12	12	2	0.80 / 0.65 / 0.80	2.25	4.50	0.888	4.00
13	14	8	2.20	2.20	17.60	1.21	21.30
14	14	5	0.22 ~ 0.96	0.59	2.95	1.21	3.57
15	14	5	0.71 ~ 1.45	1.08	5.40	1.21	6.53
16	14	3	2.80	2.80	8.40	1.21	10.16
17	14	3	0.40 / 0.40	6.41	19.23	1.21	23.27
18	14	20	0.40 / 0.10	0.50	10.00	1.21	12.10
19	14	9	0.25 / 1.98 / 0.25	2.48	22.32	1.21	27.01
20	14	8	0.70	0.70	5.60	1.21	6.78
21	14	2	2.05 / 0.35	2.40	4.80	1.21	5.81
							390.16 kg.

REFERENCE DWGS: For reinforcement see dwg № 12/9/3/01
For bars with variable unit length see note under the same title at dwg, № 20/2/1/01

Scale:	IRRIGATION & DRAINAGE STANDARDS		
Date:	DWG.№ 12/9/3/05		CONSTANT HEAD ORIFICE (CHO) LIST OF REINFORCEMENT Dia 800 TO Dia 900
Approved:	Sheet.№ 6 of 6	Rev. №	

ISLAMIC REPUBLIC OF IRAN
MINISTRY OF PLAN & BUDJET
TECHNICAL RESEARCH AND STANDARD BUREAU

omoorepeyman.ir

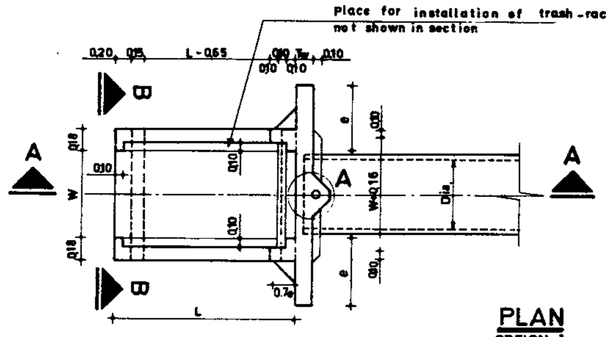

PLAN
OPTION I

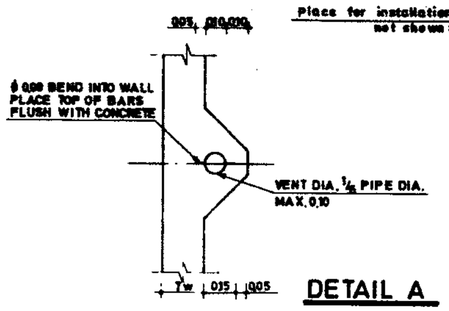

DETAIL A

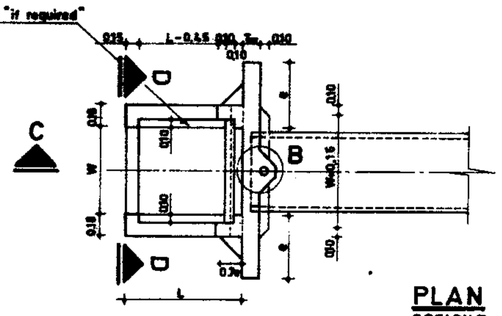

PLAN
OPTION II

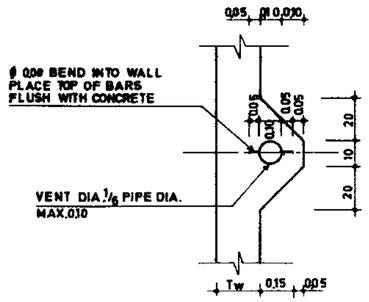

DETAIL B

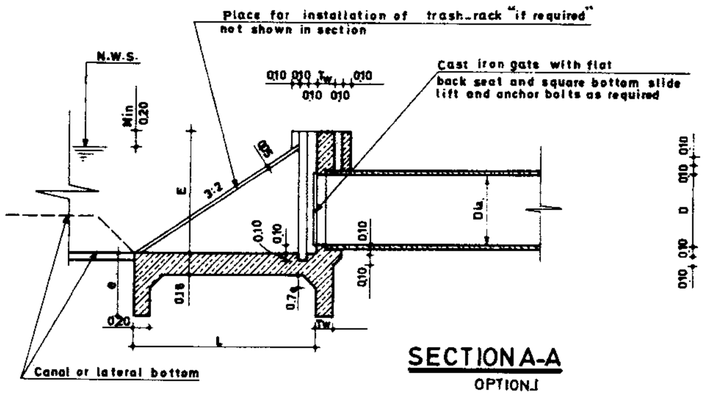

SECTION A-A
OPTION I

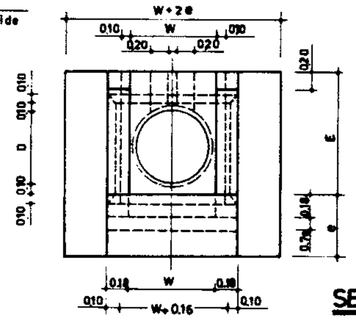

SECTION B-B
OPTION I

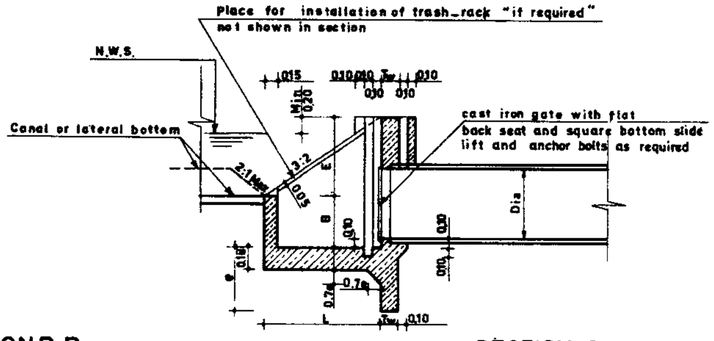

SECTION C-C
OPTION II

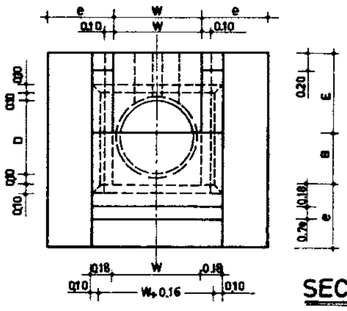

SECTION D-D
OPTION II

DIMENSION TABLE OPTION I

Dia	W	L	E	T_w	e	R/kg./Bar.	Conc. m^3.	Form. m^2
0.60	0.80	1.90	1.25	0.15	0.60	150.25	1.91	16.30
0.70	0.90	1.95	1.30	0.15	0.60	162.12	2.09	17.22
0.80	1.00	1.40	2.10	0.20	0.75	213.88	3.49	27.46
0.90	1.10	1.50	2.25	0.20	0.75	230.77	3.75	29.90
1.00	1.20	1.60	2.40	0.20	0.75	249.49	4.11	32.40

DIMENSION TABLE OPTION II

STR	Dia.	W	L	E	B	Tw	e	R/kg./Bar.	Conc. m^3.	Form. m^2
600 – 1	0.60	0.80	1.125	0.75	0.45	0.15	0.60	120.36	1.60	14.76
600 – 2	0.60	0.80	1.125	0.75	0.60	0.15	0.60	132.75	1.74	16.34
600 – 3	0.60	0.80	1.125	0.75	0.75	0.15	0.60	140.98	1.91	18.16
600 – 4	0.60	0.80	1.125	0.75	1.00	0.15	0.60	157.77	2.18	21.18
700 – 1	0.70	0.90	1.125	0.75	0.90	0.15	0.60	159.07	2.18	20.46
700 – 2	0.70	0.90	1.125	0.75	1.10	0.15	0.60	169.55	2.41	22.82
800 – 1	0.80	1.00	1.350	0.90	0.60	0.20	0.75	166.64	2.87	22.32
800 – 2	0.80	1.00	1.350	0.90	0.90	0.20	0.75	191.51	3.31	26.36
800 – 3	0.80	1.00	1.350	0.90	1.10	0.20	0.75	202.60	3.61	29.74
900 – 1	0.90	1.10	1.350	0.90	0.90	0.20	0.75	195.09	3.47	27.12
900 – 2	0.90	1.10	1.350	0.90	1.10	0.20	0.75	212.58	3.67	30.18
900 – 3	0.90	1.10	1.350	0.90	1.20	0.20	0.75	217.29	3.82	31.74
1000-1	1.00	1.20	1.50	1.00	1.10	0.20	0.75	228.94	4.22	32.76
1000-2	1.00	1.20	1.50	1.00	1.20	0.20	0.75	233.77	4.39	34.40

NOTES :

1- Turnouts are used to divert water from a supplly channel to a smaller channel. Pipes are generally used to carry the water through the bank of the supplly channel.

2- The conduit and outlet sections of the structure may be designed as part of another type of structure such as a siphon or a drop or they may connect to water measurement structure.

3- Design considerations: a) For velocity in the pipe and other hydraulic considerations see notes on dwg. № 11/6/1/02. b) Turnout inlet should be set so that they do not protrude into the canal prism. the slope of the sidewalls should be such that they will not interfere with cleaning and maintaining the canal.

c) The airvent shown on this dwg. is to prevent the formation of a vacuum downstream of the turnout gate and may be omitted when the turnout is submerged by the design delivery water surface.

REFERENCE DWGS: For reinforcement see dwg. № 12/8/3/01

For general notes see dwgs. № 20/2/1/01 TO 20/2/1/03

Scale: N.T.S

Date:

Approved:

IRRIGATION & DRAINAGE STANDARDS

DWG. № 12/8/1/01

Sheet. № 1 of 4 Rev. №

TURNOUTS (PLAN & SECTION)

ISLAMIC REPUBLIC OF IRAN
MINISTRY OF PLAN & BUDJET
TECHNICAL RESEARCH AND STANDARD BUREAU

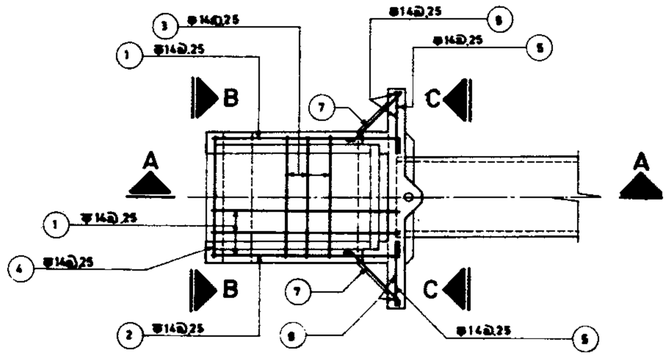

PLAN
Scale 1:50

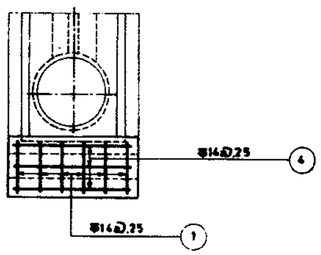

SECTION B_B
Scale 1:50

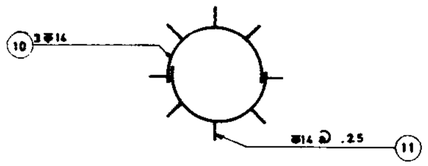

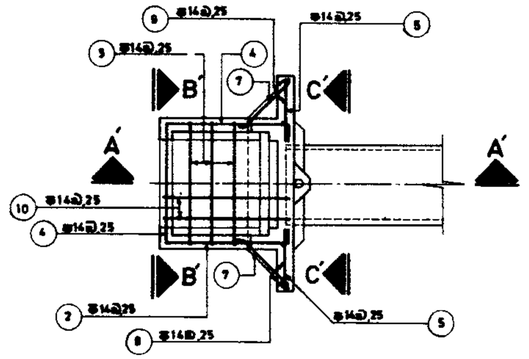

PLAN
Scale 1:50

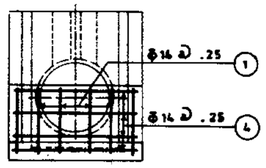

SECTION B'_B'
Scale 1:50

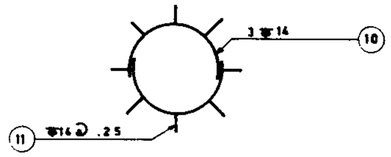

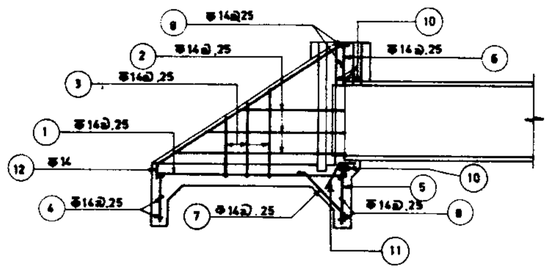

SECTION A_A
Scale 1:50

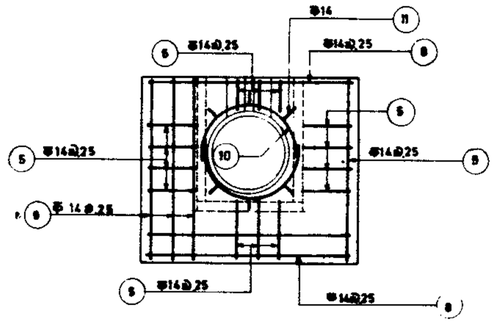

SECTION C_C
Scale 1:50

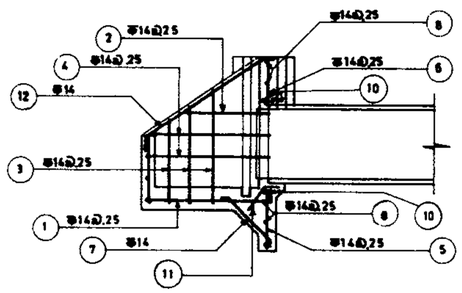

SECTION A'_A'
Scale 1:50

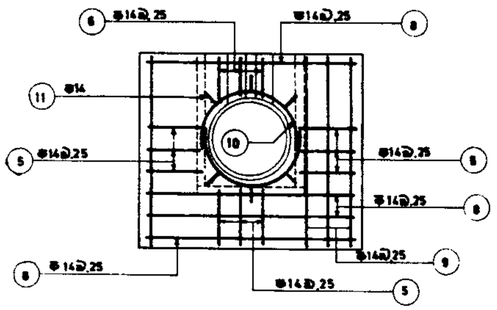

SECTION C'_C'
Scale 1:50

REFERENCE DWGS: For plan & section see dwg. N°. 12/8/1/01
For list of reinforcement see dwgs. N°. 12/8/3/03 & 12/8/3/03

Scale: 1:50	IRRIGATION & DRAINAGE STANDARDS		ISLAMIC REPUBLIC OF IRAN MINISTRY OF PLAN & BUDJET TECHNICAL RESEARCH AND STANDARD BUREAU
Date:	DWG. N°. 12/8/3/01	TURNOUTS REINFORCEMENT PLAN & SECTION	
Approved:	Sheet. N° 2of4 Rev. N°		

omoorepeyman.ir

DIA 60

Pos.	Nº	FORM	UNIT LENG	TOTAL LENG
1	6	0.50 — 1.95 — 0.10	2.50	15.00
2	10	0.35 ~ 1.90 — 0.20	1.33	13.30
3	10	0.25 ~ 1.30 — 1.01 — 0.25 ~ 1.30	2.56	25.60
4	4	1.10	1.10	4.40
5	6	0.50	0.50	3.00
6	2	0.49	0.49	0.98
7	14	0.25 — 0.79	1.04	14.56
8	6	1.88	1.86	11.16
9	8	1.75	1.75	14.00
10	3	0.40 — 0.40	3.79	11.37
11	11	0.30 — 0.20	0.50	5.50
12	2	0.20 — 2.25 — 0.20	2.65	5.30
				124.17

124.17 x 1.21 = 150.25 kg

DIA 70

Pos.	Nº	FORM	UNIT LENG	TOTAL LENG
1	6	0.50 — 1.95 — 0.10	2.55	15.30
2	12	0.35 ~ 1.95 — 0.20	1.35	16.20
3	10	0.25 ~ 1.35 — 1.11 — 0.25 ~ 1.35	2.71	27.10
4	4	1.20	1.20	4.80
5	9	0.50	0.50	4.50
6	3	0.40	0.40	1.20
7	15	0.25 — 0.79	1.04	15.60
8	5	2.00	2.00	10.00
9	8	1.80	1.80	14.40
10	3	0.40 — 0.40	4.30	12.90
11	13	0.30 — 0.20	0.50	6.50
12	2	0.20 — 2.34 — 0.20	2.74	5.48
				133.98

133.98 x 1.21 = 162.12 kg

DIA 80

Pos.	Nº	FORM	UNIT LENG	TOTAL LENG
1	7	0.65 — 1.40 — 0.10	2.15	15.05
2	18	0.35 — 1.40 — 0.20	1.08	19.35
3	8	0.25 ~ 2.15 — 1.21 — 0.25 ~ 2.15	3.61	28.88
4	4	1.30	1.30	5.20
5	9	0.65	0.65	5.85
6	3	1.10	1.10	3.30
7	22	0.25 — 0.94	1.19	26.18
8	9	2.40	2.40	21.60
9	8	2.75	2.75	22.00
10	3	0.40 — 0.40	4.66	13.99
11	14	0.30 — 0.20	0.50	7.00
12	2	0.20 — 3.78 — 0.20	4.18	8.36
				176.76

176.76 x 1.21 = 213.88 kg

DIA 90

Pos.	Nº	FORM	UNIT LENG	TOTAL LENG
1	7	0.65 — 1.50 — 0.10	2.25	15.75
2	18	0.35 ~ 1.50 — 0.20	1.13	20.34
3	8	0.25 ~ 2.30 — 0.25 ~ 2.30	3.86	30.88
4	4	1.40	1.40	5.60
5	12	0.65	0.65	7.80
6	4	1.15	1.15	4.60
7	24	0.25 — 0.94	1.19	28.56
8	9	2.50	2.50	22.50
9	8	2.90	2.90	23.20
10	3	0.40 — 0.40	5.03	15.09
11	15	0.30 — 0.20	0.50	7.50
12	2	0.20 — 4.05 — 0.20	4.45	8.90
				190.72

190.72 x 1.21 = 230.77 kg

DIA 100

Pos.	Nº	FORM	UNIT LENG	TOTAL LENG
1	8	0.65 — 1.60 — 0.10	2.35	18.80
2	20	0.35 — 1.60 — 0.20	1.18	23.60
3	8	0.25 ~ 2.45 — 1.41 — 0.25 ~ 2.45	4.11	32.88
4	4	1.50	1.50	6.00
5	12	0.65	0.65	7.80
6	4	1.16	1.16	4.64
7	25	0.25 — 0.94	1.19	29.75
8	9	2.64	2.64	23.76
9	8	3.05	3.05	24.40
10	3	0.40 — 0.40	5.54	16.62
11	17	0.30 — 0.20	0.50	8.50
12	2	0.20 — 4.32 — 0.20	4.72	9.44
				206.19

206.19 x 1.21 = 249.49 kg

STR.600_1

Pos.	Nº	FORM	UNIT LENG	TOTAL LENG
1	6	0.50 — 1.13 — 0.10	1.73	10.38
2	8	0.35 ~ 1.13 — 0.20	0.94	7.52
3	6	0.50 ~ 1.25 — 1.01 — 0.50 ~ 1.25	2.76	16.56
4	1	0.98 — 1.13 / 1.13 — 0.10 / 0.10	3.44	3.44
5	6	0.50	0.50	3.00
6	2	0.37	0.37	0.74
7	14	0.25 — 0.79	1.04	14.56
8	5	1.86	1.86	9.30
9	8	1.70	1.70	13.60
10	3	0.40 — 0.40	3.79	11.37
11	11	0.30 — 0.20	0.50	5.50
12	2	0.20 — 1.35 — 0.20	1.75	3.50
				99.47

99.47 x 1.21 = 120.36 kg

STR. 600_2

Pos.	Nº	FORM	UNIT LENG	TOTAL LENG
1	6	0.65 — 1.13 — 0.10	1.88	11.28
2	8	0.35 ~ 1.13 — 0.20	0.94	7.52
3	6	0.65 ~ 1.40 — 1.01 — 0.65 ~ 1.40	3.06	18.36
4	2	0.98 — 1.13 / 1.13 — 0.10 / 0.10	3.44	6.88
5	6	0.50	0.50	3.00
6	2	0.37	0.37	0.74
7	15	0.25 — 0.79	1.04	15.60
8	6	1.86	1.86	11.16
9	8	1.85	1.85	14.80
10	3	0.40 — 0.40	3.79	11.37
11	11	0.30 — 0.20	0.50	5.50
12	2	0.20 — 1.35 — 0.20	1.75	3.50
				109.71

109.71 x 1.21 = 132.75 kg

STR. 600_3

Pos.	Nº	FORM	UNIT LENG	TOTAL LENG
1	6	0.80 — 1.13 — 0.10	2.03	12.18
2	8	0.35 ~ 1.13 — 0.20	0.94	7.52
3	6	0.80 ~ 1.55 — 1.01 — 0.80 ~ 1.55	3.36	20.16
4	2	0.98 — 1.13 / 1.13 — 0.10 / 0.10	3.44	6.88
5	6	0.50	0.50	3.00
6	2	0.37	0.37	0.74
7	16	0.25 — 0.79	1.04	16.44
8	7	1.86	1.86	13.02
9	8	2.00	2.00	16.00
10	3	0.40 — 0.40	3.79	11.37
11	11	0.30 — 0.20	0.50	5.50
12	2	0.20 — 1.35 — 0.20	1.75	3.50
				116.51

116.51 x 1.21 = 140.98 kg

STR. 600_4

Pos.	Nº	FORM	UNIT LENG	TOTAL LENG
1	6	1.05 — 1.13 — 0.10	2.28	13.68
2	8	0.35 ~ 1.13 — 0.20	0.94	7.52
3	6	1.05 ~ 1.80 — 1.01 — 1.05 ~ 1.80	3.86	23.16
4	3	0.98 — 1.13 / 1.13 — 0.10 / 0.10	3.44	10.32
5	6	0.50	0.50	3.00
6	2	0.37	0.37	0.74
7	18	0.25 — 0.79	1.04	18.72
8	8	1.86	1.86	14.88
9	8	2.25	2.25	18.00
10	3	0.40 — 0.40	3.79	11.37
11	11	0.30 — 0.20	0.50	5.50
12	2	0.20 — 1.35 — 0.20	1.75	3.50
				130.39

130.39 x 1.21 = 157.77 kg

STR. 700_1

Pos.	Nº	FORM	UNIT LENG	TOTAL LENG
1	6	0.95 — 1.13 — 0.10	2.18	13.08
2	8	0.35 ~ 1.13 — 0.20	0.94	7.52
3	6	0.95 ~ 1.70 — 1.11 — 0.95 ~ 1.70	3.76	22.56
4	3	0.90 — 1.13 / 1.13 — 0.10 / 0.10	3.36	10.08
5	9	0.50	0.50	4.50
6	3	0.30	0.30	0.90
7	18	0.25 — 0.79	1.04	18.72
8	7	2.00	2.00	14.00
9	8	2.15	2.15	17.20
10	3	0.40 — 0.40	4.30	12.90
11	13	0.30 — 0.20	0.50	6.50
12	2	0.20 — 1.35 — 0.20	1.75	3.50
				131.46

131.46 x 121 = 159.07 kg

NOTES: List of reinforcement for turnouts without drop are shown wiht their dia

ALL BARS ARE Φ14 (1.21 kg/m)

REFERENCE DWGS: For reinforcement see dwg. Nº 12/8/3/01

For bars with variable unit length see note under the same title at dwg. Nº 20/2/1/01

Scale:	IRRIGATION & DRAINAGE STANDARDS		
Date	DWG. Nº 12/8/3/02	TURNOUTS LIST OF REINFORCEMENT DIA 0.60 TO 1.00 STR 600_1 TO 700_1	ISLAMIC REPUBLIC OF IRAN MINISTRY OF PLAN & BUDJET TECHNICAL RESEARCH AND STANDARD BUREAU
Approved:	Sheet.Nº 3of 4	Rev Nº	

omoorepeyman.ir

STR. 700_2

Pos.	Nº	FORM	UNIT LENG	TOTAL LENG
1	6	3.15 / 1.13 / 0.10	2.38	14.28
2	8	0.35 ~ 1.13 / 0.20	0.94	7.52
3	6	1.15 ~ 1.90 / 1.11 / 1.15 ~ 1.90	4.16	24.96
4	4	1.08 / 1.13 / 1.13 / 0.10 / 0.10	3.54	14.16
5	9	0.50	0.50	4.50
6	3	0.30	0.30	0.90
7	20	0.25 / 0.78	1.04	20.80
8	8	2.00	2.00	16.00
9	6	2.35	2.35	14.10
10	3	0.40 / 0.40	4.30	12.90
11	13	0.30 / 0.20	0.50	6.50
12	2	0.20 / 1.35 / 0.20	1.75	3.50
				140.12

140.12 x 1.21 = 169.55 kg

STR. 800_1

Pos.	Nº	FORM	UNIT LENG	TOTAL LENG
1	7	0.85 / 1.35 / 0.10	2.10	14.70
2	10	0.35 ~ 1.35 / 0.20	1.05	10.50
3	6	0.85 ~ 1.55 / 1.21 / 0.85 ~ 1.55	3.41	20.46
4	2	1.18 / 1.35 / 1.35 / 0.10 / 0.10	4.08	8.16
5	9	0.65	0.65	5.85
6	3	0.40	0.40	1.20
7	17	0.25 / 0.94	1.19	20.23
8	6	2.40	2.40	14.40
9	8	2.15	2.15	17.20
10	3	0.40 / 0.40	4.66	13.98
11	14	0.30 / 0.20	0.50	7.00
12	2	0.20 / 1.62 / 0.20	2.02	4.04
				137.72

137.72 x 1.21 = 166.64 kg

STR. 800_2

Pos.	Nº	FORM	UNIT LENG	TOTAL LENG
1	7	0.95 / 1.35 / 0.10	2.40	16.80
2	10	0.35 ~ 1.35 / 0.20	1.05	10.50
3	6	0.95 ~ 1.85 / 1.21 / 0.95 ~ 1.85	4.01	24.06
4	3	1.18 / 1.35 / 1.35 / 0.10 / 0.10	4.08	12.24
5	9	0.85	0.65	5.85
6	3	0.40	0.40	1.20
7	20	0.25 / 0.94	1.19	23.80
8	8	2.40	1.65	19.20
9	8	2.45	2.45	19.60
10	3	0.40 / 0.40	4.66	13.98
11	14	0.30 / 0.20	0.50	7.00
12	2	0.20 / 1.62 / 0.20	2.02	4.04
				158.27

158.27 x 1.21 = 191.51 kg

STR. 800_3

Pos.	Nº	FORM	UNIT LENG	TOTAL LENG
1	7	1.15 / 1.35 / 0.10	2.60	18.20
2	10	0.35 ~ 1.35 / 0.20	1.05	10.50
3	6	1.15 ~ 2.05 / 1.21 / 1.15 ~ 2.05	4.41	26.46
4	4	1.18 / 1.35 / 1.35 / 0.10 / 0.10	4.08	16.32
5	9	0.65	1.05	4.35
6	3	0.40	0.40	1.95
7	21	0.25 / 0.94	1.19	24.99
8	8	2.40	2.40	19.20
9	8	2.65	2.65	21.20
10	3	0.40 / 0.40	4.66	13.98
11	14	0.30 / 0.20	0.50	7.00
12	2	0.20 / 1.62 / 0.20	2.02	4.04
				167.44

167.44 x 1.21 = 202.60 kg

STR. 900_1

Pos.	Nº	FORM	UNIT LENG	TOTAL LENG
1	7	0.95 / 1.35 / 0.10	2.40	16.80
2	10	0.35 ~ 1.35 / 0.20	1.05	10.50
3	6	0.95 ~ 1.85 / 1.31 / 0.95 ~ 1.35	4.11	24.66
4	3	1.28 / 1.35 / 1.35 / 0.10 / 0.10	4.18	12.54
5	12	0.65	0.65	7.80
6	4	0.35	0.35	1.40
7	20	0.25 / 0.94	1.19	23.80
8	7	2.50	2.50	17.50
9	8	2.45	2.45	19.60
10	3	0.40 / 0.40	5.03	15.09
11	15	0.30 / 0.20	0.50	7.50
12	2	0.20 / 1.82 / 0.20	2.02	4.04
				161.23

161.23 x 1.21 = 195.09 kg

STR. 900_2

Pos.	Nº	FORM	UNIT LENG	TOTAL LENG
1	7	1.15 / 1.35 / 0.10	2.60	18.20
2	10	0.35 ~ 1.35 / 0.20	1.05	10.50
3	6	1.15 ~ 2.05 / 1.31 / 1.15 ~ 2.05	4.51	27.06
4	4	1.28 / 1.35 / 1.35 / 0.10 / 0.10	4.18	16.72
5	12	0.65	0.65	7.80
6	4	0.35	0.35	1.40
7	22	0.25 / 0.94	1.19	26.18
8	8	2.50	2.50	20.00
9	8	2.65	2.60	21.20
10	3	0.40 / 0.40	5.03	15.09
11	15	0.30 / 0.20	0.50	7.50
12	2	0.20 / 1.62 / 0.20	2.02	4.04
				175.69

175.69 x 1.21 = 212.58 kg

STR. 900_3

Pos.	Nº	FORM	UNIT LENG	TOTAL LENG
1	7	1.25 / 1.35 / 0.10	2.70	18.90
2	10	0.35 ~ 1.35 / 0.20	1.05	10.50
3	6	1.25 ~ 2.15 / 1.31 / 1.25 ~ 2.15	4.71	28.26
4	4	1.28 / 1.35 / 1.35 / 0.10 / 0.10	4.18	16.72
5	12	0.65	0.65	7.80
6	4	0.35	0.35	1.40
7	23	0.25 / 0.94	1.19	27.37
8	8	2.50	2.50	20.00
9	8	2.75	2.75	22.00
10	3	0.40 / 0.40	5.03	15.09
11	15	0.30 / 0.20	0.50	7.50
12	2	0.20 / 1.62 / 0.20	2.02	4.04
				179.58

179.58 x 1.21 = 217.29 kg

STR. 1000_1

Pos.	Nº	FORM	UNIT LENG	TOTAL LENG
1	8	1.15 / 1.50 / 0.10	2.75	22.00
2	10	0.35 ~ 1.80 / 0.20	1.13	11.30
3	6	1.15 ~ 2.15 / 1.41 / 1.15 ~ 2.15	4.71	28.26
4	4	1.38 / 1.50 / 1.50 / 0.10 / 0.10	4.58	18.32
5	12	0.65	0.65	7.80
6	4	0.38	0.38	1.52
7	23	0.25 / 0.94	1.19	27.37
8	8	2.64	2.64	21.12
9	8	2.75	2.75	22.00
10	3	0.40 / 0.40	5.54	16.62
11	17	0.30 / 0.20	0.50	8.50
12	2	0.20 / 1.80 / 0.20	2.20	4.40
				189.21

189.21 x 1.21 = 228.94 kg

STR. 1000_2

Pos.	Nº	FORM	UNIT LENG	TOTAL LENG
1	8	1.25 / 1.50 / 0.10	2.85	22.80
2	10	0.35 1.50 / 0.20	1.13	11.30
3	6	1.25 ~ 2.25 / 1.41 / 1.25 ~ 2.25	4.91	29.46
4	4	1.38 / 1.50 / 1.50 / 0.10 / 0.10	4.58	18.32
5	12	0.65	0.65	7.80
6	4	0.35	0.38	1.52
7	24	0.25 / 0.94	1.19	28.56
8	8	2.64	2.64	21.12
9	8	2.85	2.85	22.80
10	3	0.40 / 0.40	5.54	16.62
11	17	0.30 / 0.20	0.50	8.50
12	2	0.20 / 1.80 / 0.20	2.20	4.40
				193.20

193.20 x 1.21 = 233.77 kg

ALL BARS ARE Φ14 (1.21 kg/m)

PEFERENCE DWGS: For reinforcement see dwg. Nº 12/8/3/01

For bars with variable unit length see note under the same title at dwg. Nº 20/2/1/01

Scale:	IRRIGATION & DRAINAGE STANDARDS	
Date:	DWG. Nº 12/8/3/03	TURNOUTS LIST OF REINFORCEMENT STR. 700_2 TO 1000_2
Approved:	Sheet. Nº 4 of 4 Rev Nº	

ISLAMIC REPUBLIC OF IRAN
MINISTRY OF PLAN & BUDJET
TECHNICAL RESEARCH AND STANDARD BUREAU

omoorepeyman.ir

NOTES:

1. Division structures are used to divide the flow from a supply pipe or channel into two or more channels or pipes.
2. Division structures may be an operating structure or it may be the outlet of a siphon, a drop, or a turnout from which further diversion is required.
3. Adjustable gates used to provide a means of control and measurement of flow.
4. Various combinations of supply and delivery are shown on dwgs. №12/7/1/01 to 12/7/1/09. In practice any of the possible combinations may be encountered.
5. Design considerations:
   (a) water must be delivered to the division structure at an elevation that will provide enough head on the gates to furnish the required flow at the required delivery water surface elevation.
   (b) when delivery to the division structure is through a pipe, the velocity in the pipe is kept to about 0.45 m s. to reduce turbulence ahead of the weir.

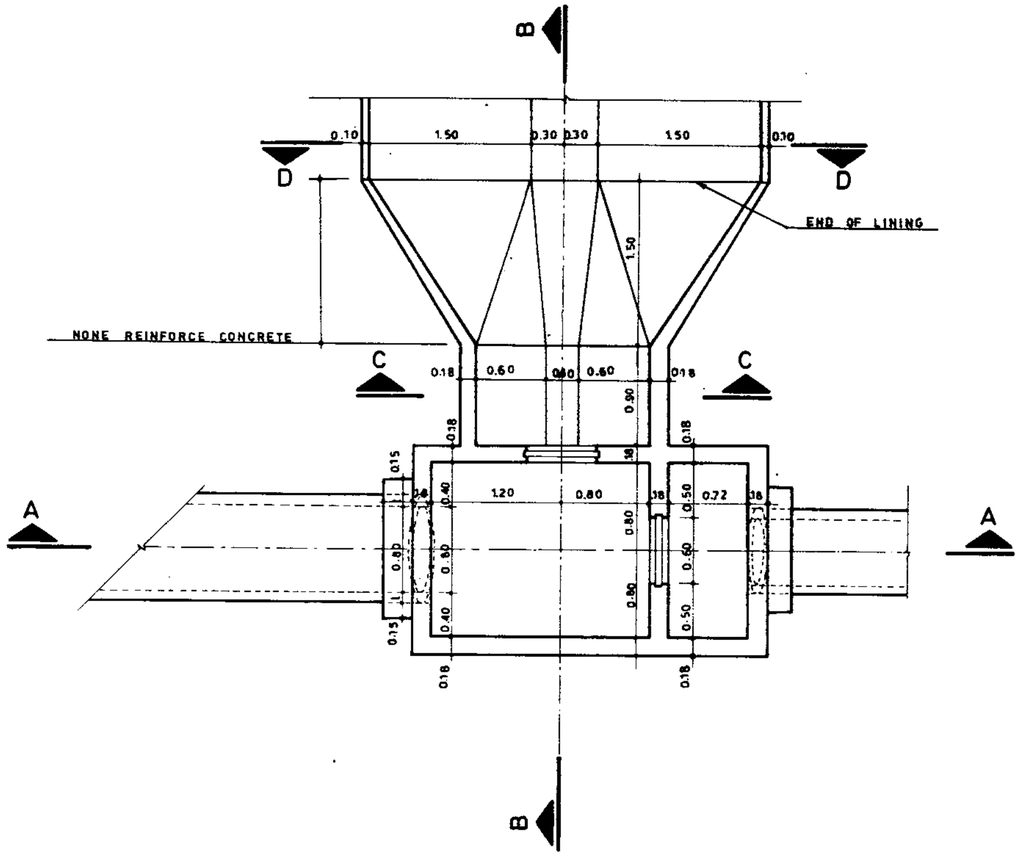

PLAN
Scale 1:40

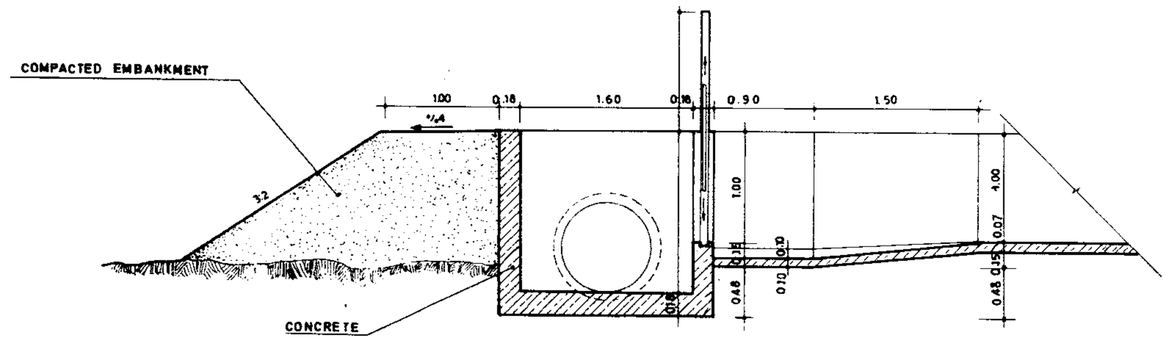

SECTION B-B
Scale 1:40

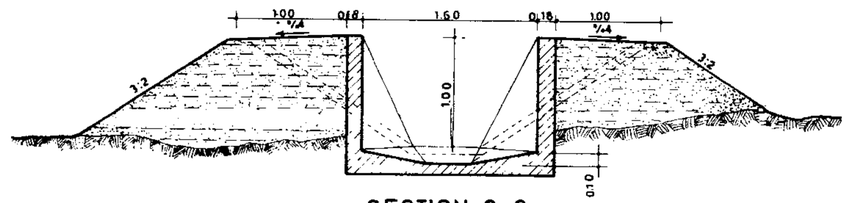

SECTION C-C
Scale 1:40

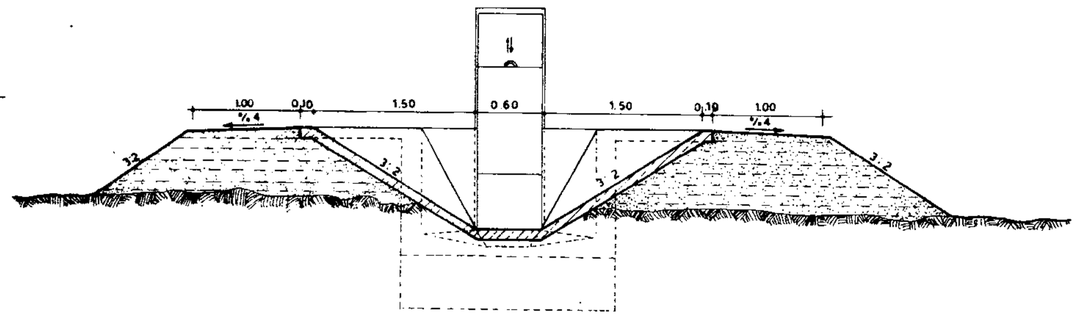

SECTION D-D
Scale 1:40

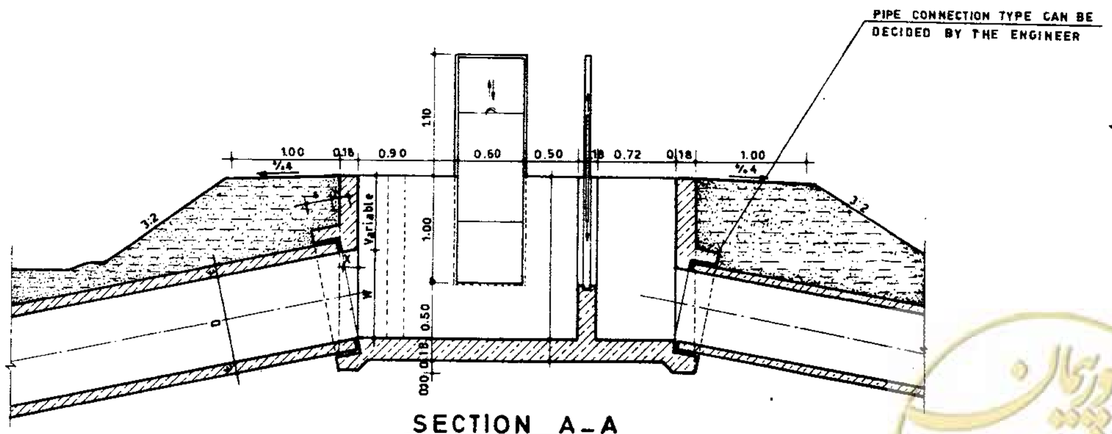

SECTION A-A
Scale 1:40

R/Bar. Kg	Conc. m^3	Form. m^2
352.99	3.96	25.82

SLIDE GATE	0.40x0.80	0.50x0.80	0.60x0.80	0.70x0.80	0.80x0.80
Q* (l/s)	320	400	480	560	640

* For V=1.00 m/s

REFERENCE DWGS.

1-FOR REINFORCEMENT SEE DWG.№. 12/7/3/01

2-FOR DETAIL AND DIMENSION OF PIPE CONNECTION SEE DWGS.№ 17/1/1/01 TO 17/1/1/03

3-FOR GENERAL NOTES SEE DWGS.№ 20/2/1/01 TO 20/2/1/03

Scale: 1:40	IRRIGATION & DRAINAGE STANDARDS	
Date:	DWG. № 12/7/1/01	DIVISION BOX (TYPE1)
Approved:	Sheet № 1 of 18 Rev.№	

ISLAMIC REPUBLIC OF IRAN
MINISTRY OF PLAN & BUDJET
TECHNICAL RESEARCH AND STANDARD BUREAU

omoorepeyman.ir

R/Bar. kg.	Conc. m^3	Form. m^2
423.16	4.55	34.88

SLIDE GATE	0.40×0.80	0.50×0.80	0.60×0.80	0.70×0.80	0.80×0.80
Q^* (l/s)	320	400	480	560	640

* FOR V=1.00 m/s

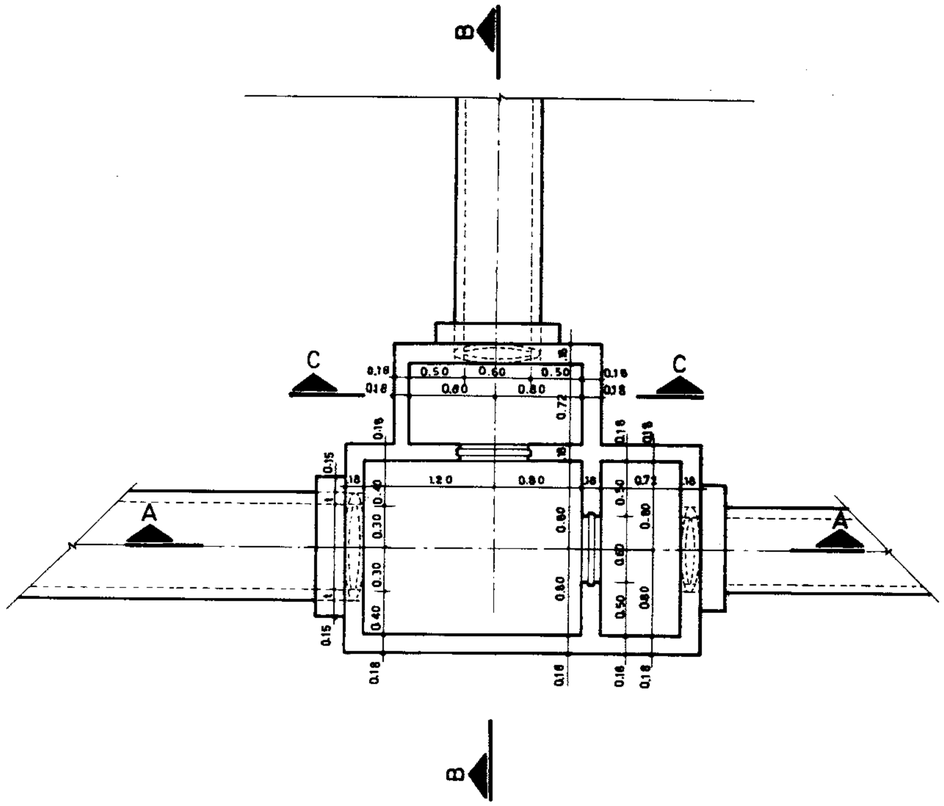

PLAN
Scale 1:40

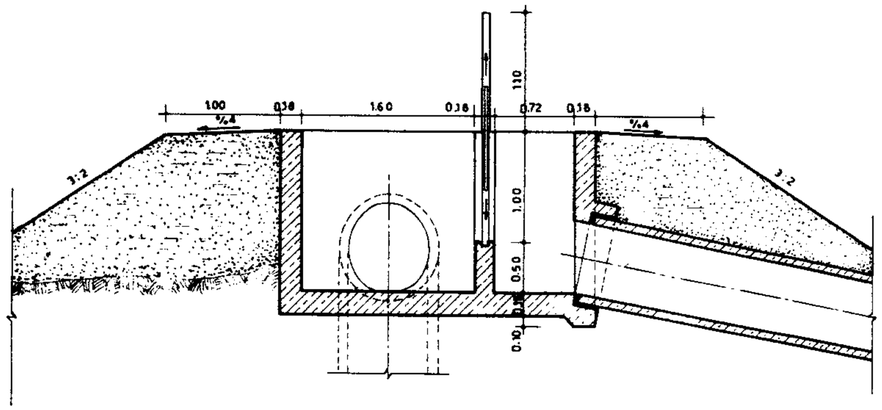

SECTION B-B
Scale 1:40

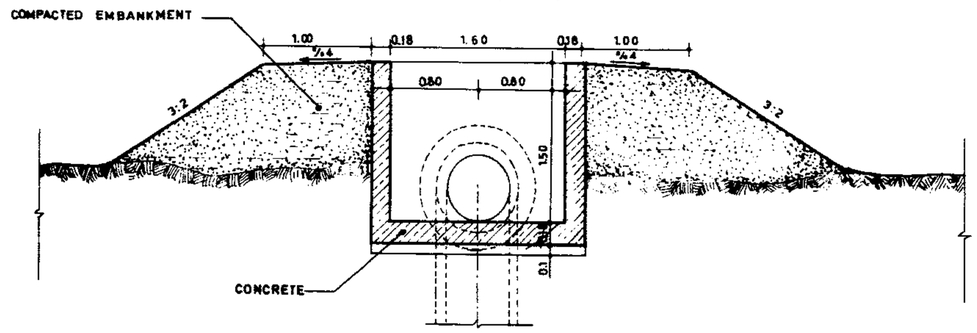

SECTION C-C
Scale 1:40

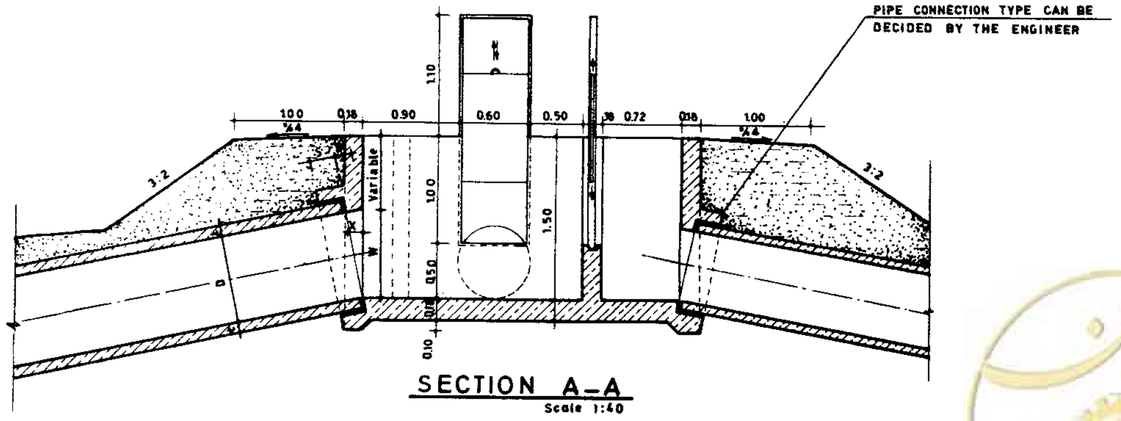

SECTION A-A
Scale 1:40

NOTE:
See notes on dwg-№ 12/7/1/01

REFERENCE DWGS
1-FOR REINFORCEMENT SEE DWG. №. [illegible]3/02
2-FOR DETAIL AND DIMENSION OF PIPE CONNECTION SEE DWGS.№.17/1/1/01 TO 17/1/1/03
3-FOR GENERAL NOTES SEE DWGS.№. [illegible]/1/01 TO 2/2/1/03

Scale: 1:40	IRRIGATION & DRAINAGE STANDARDS		ISLAMIC REPUBLIC OF IRAN MINISTRY OF PLAN & BUDJET TECHNICAL RESEARCH AND STANDARD BUREAU
Date:	DWG. №: 12/7/1/02		
Approved:	Sheet №: 2 of 18	Rev.№	DIVISION BOX (TYPE 2)

omoorepeyman.ir

R/Bar kg.	Conc. m³	Form. m²
330.00	5.31	41.60

SLIDE GATE	0.40×0.80	0.50×0.80	0.60×0.80	0.70×0.80	0.80×0.80
Q*(l/s)	320	400	480	560	640

* FOR V=1.00 m/s

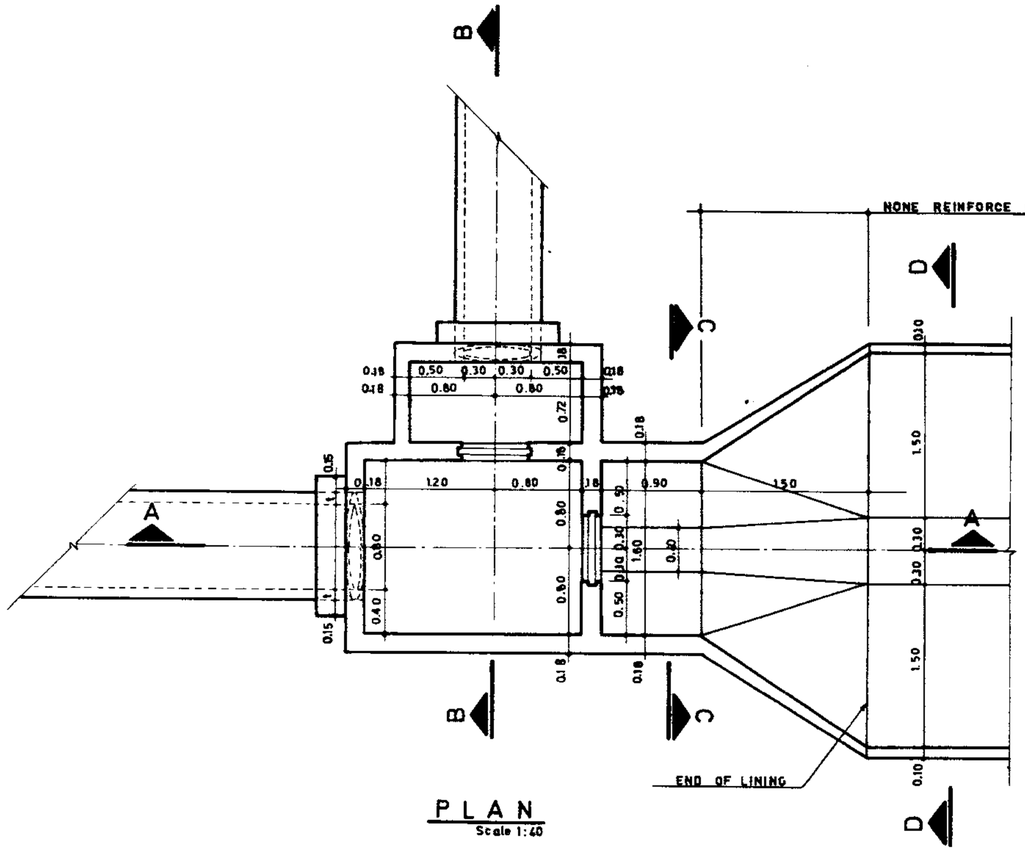

PLAN
Scale 1:40

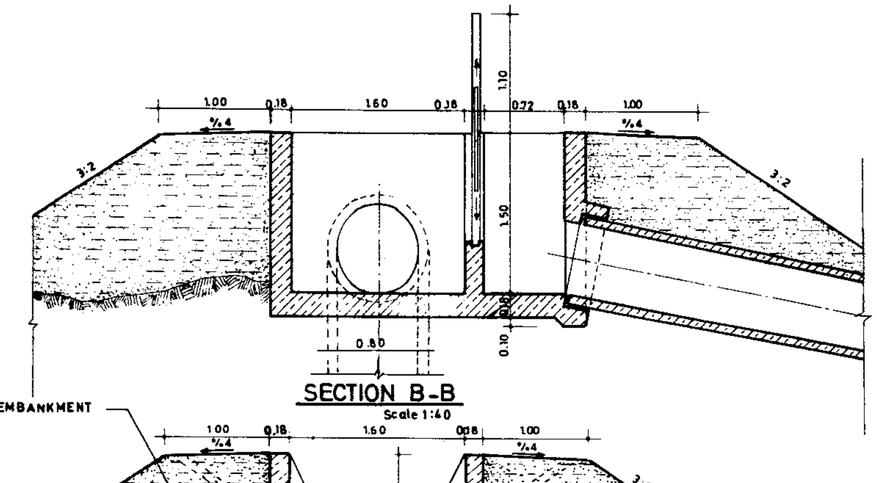

SECTION B-B
Scale 1:40

SECTION C-C
Scale 1:40

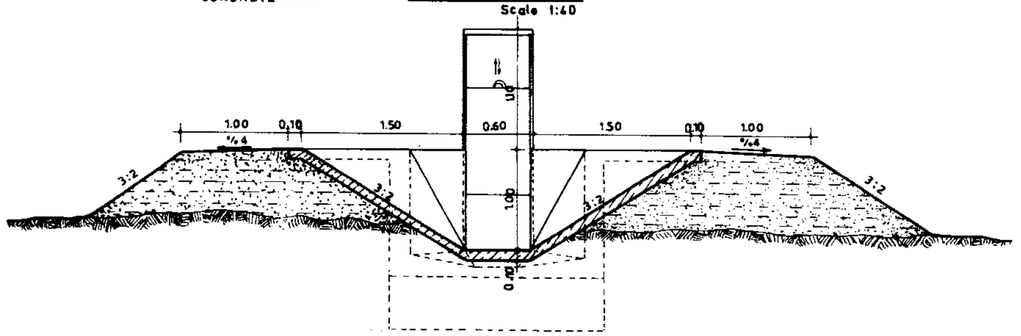

SECTION D-D
Scale 1:40

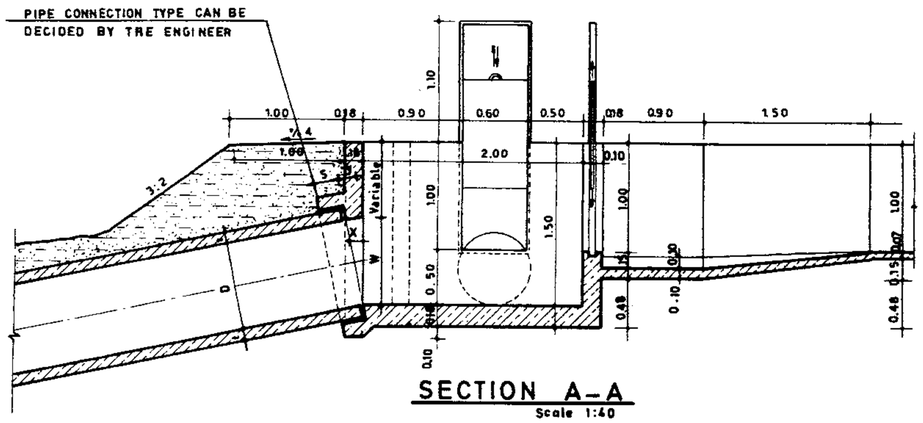

SECTION A-A
Scale 1:40

NOTE:
See notes on dwg.№ 12/7/1/01

REFERENCE DWGS.

1-FOR REINFORCEMENT SEE DWG. №. _ _/3/03

2-FOR DETAIL AND DIMENSION OF PIPE CONNECTION SEE DWGS.№. 17/1/1/01 TO 17/1/1/03

3-FOR GENERAL NOTES SEE DWGS.№ 2_ _/01 TO 20/2/1/03

Scale: 1:40	IRRIGATION & DRAINAGE STANDARDS	
Date:	DWG. № 12/7/1/03	DIVISION BOX (TYPE-3)
Approved:	Sheet № 3 of 18 Rev.№	

ISLAMIC REPUBLIC OF IRAN
MINISTRY OF PLAN & BUDJET
TECHNICAL RESEARCH AND STANDARD BUREAU

amoorepeyman.ir

R/Bar. kg.	Conc. m3	Form. m2
268.43	4.54	34.52

SLIDE GATE	0.40×0.80	0.50×0.80	0.60×0.80	0.70×0.80	0.80×0.80
Q*(l/s)	320	400	480	560	640

* FOR V=1.00 m/s

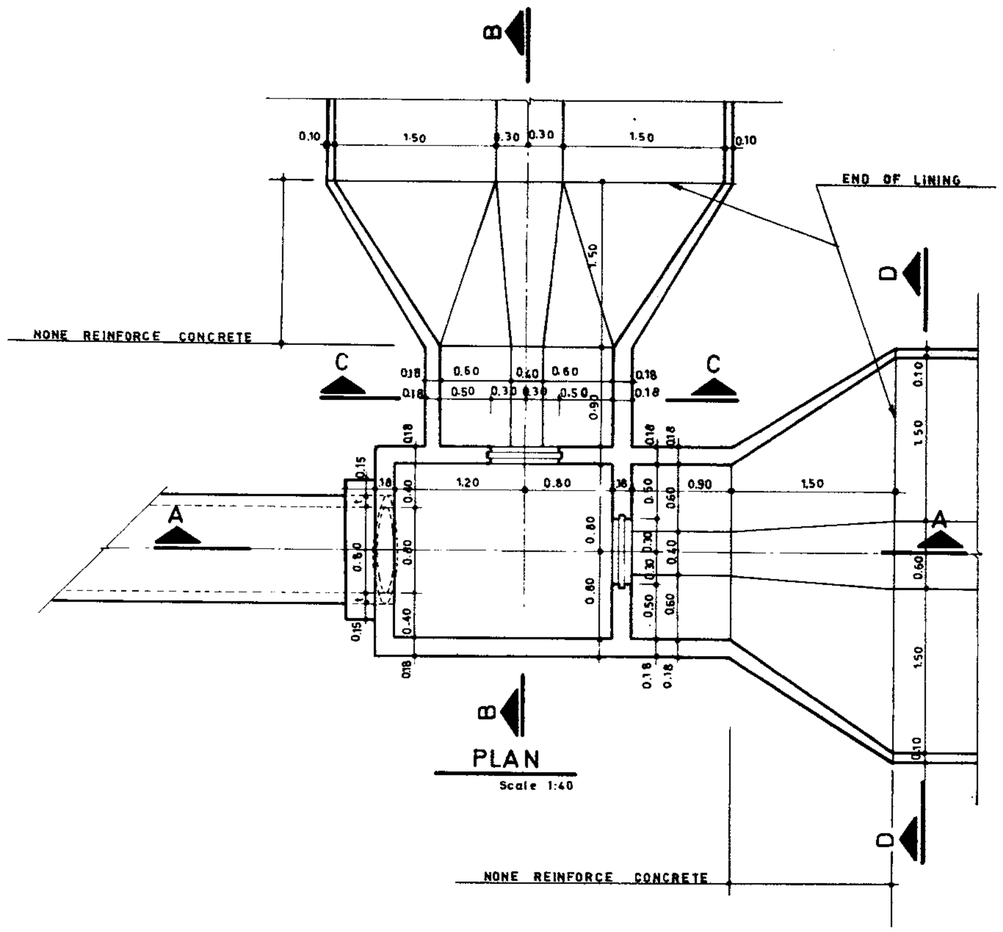

PLAN
Scale 1:40

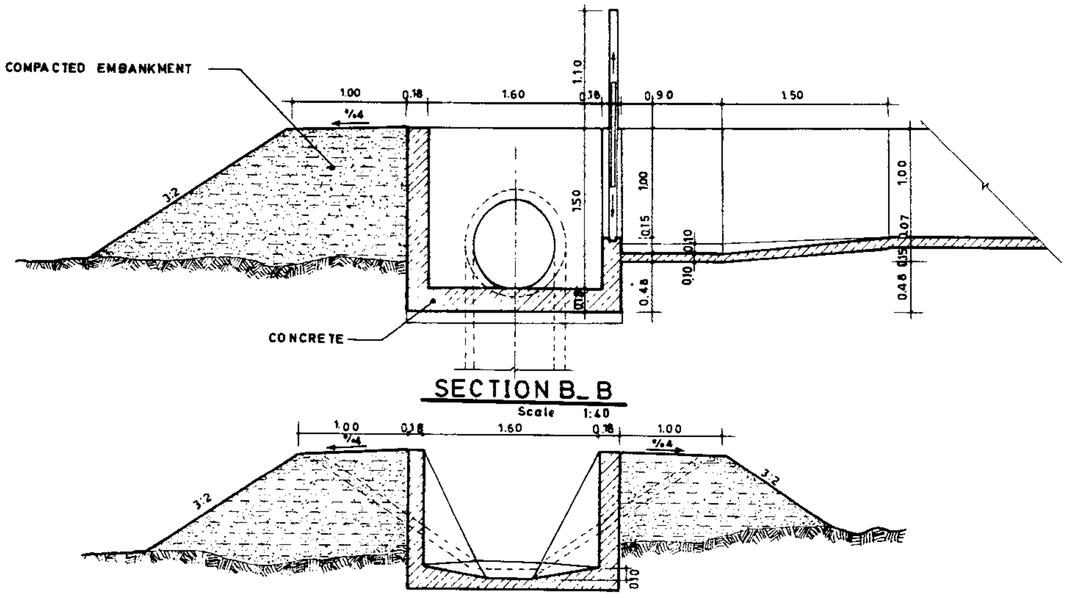

SECTION B_B
Scale 1:40

SECTION C_C
scale 1:40

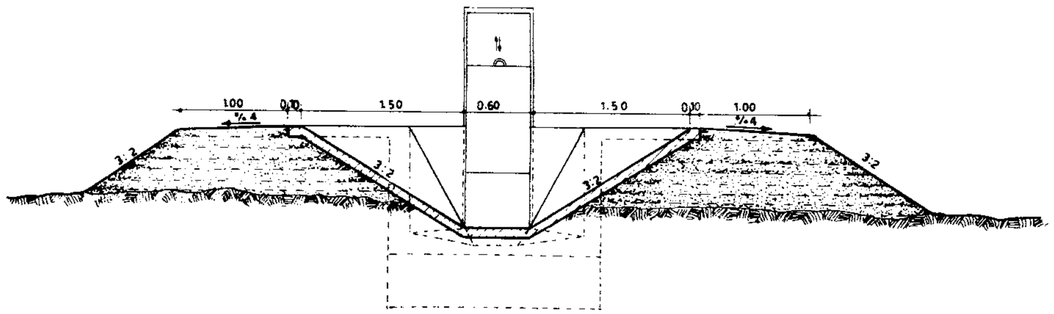

SECTION D_D
Scale 1:40

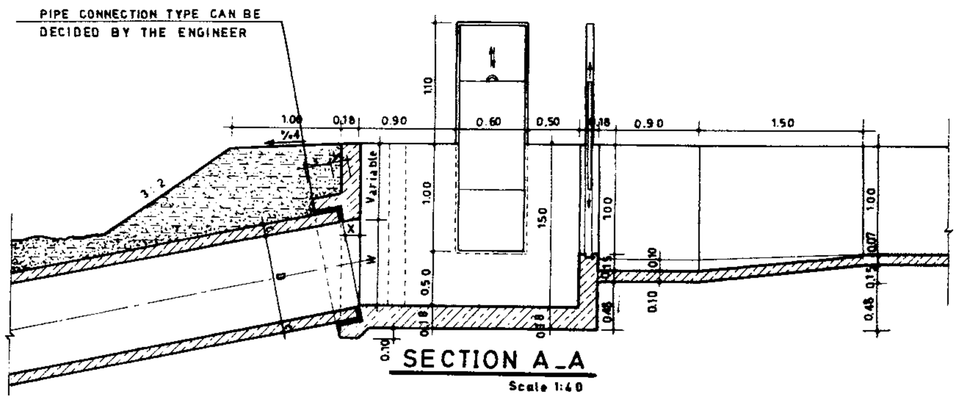

SECTION A_A
Scale 1:40

NOTE:
See notes on dwg.№ 12/7/1/01

REFERENCE DWGS
1- FOR REINFORCEMENT SEE DWG.№ 17/1/04
2- FOR DETAIL AND DIMENSION OF PIPE CONNECTION SEE DWGS.№ 17/1/1/01 TO 17/1/1/03
3- FOR GENERAL NOTES SEE DWGS.№ 12/1/01 TO 20/2/1/03

Scale 1:40	IRRIGATION & DRAINAGE STANDARDS	
Date:	DWG. № 12/7/1/04	DIVISION BOX (TYPE 4)
Approved:	Sheet № 4 of 18 Rev №	

ISLAMIC REPUBLIC OF IRAN
MINISTRY OF PLAN & BUDJET
TECHNICAL RESEARCH AND STANDARD BUREAU

@omoorepeyman.ir

R/Bar kg.	Conc. m3	Form. m2
455.69	3.84	29.07

SLIDE GATE	0.40×0.80	0.50×0.80	0.60×0.80	0.70×0.80	0.80×0.80
Q^{*}(l/s)	320	400	480	560	640

* FOR V=1.00 m/s

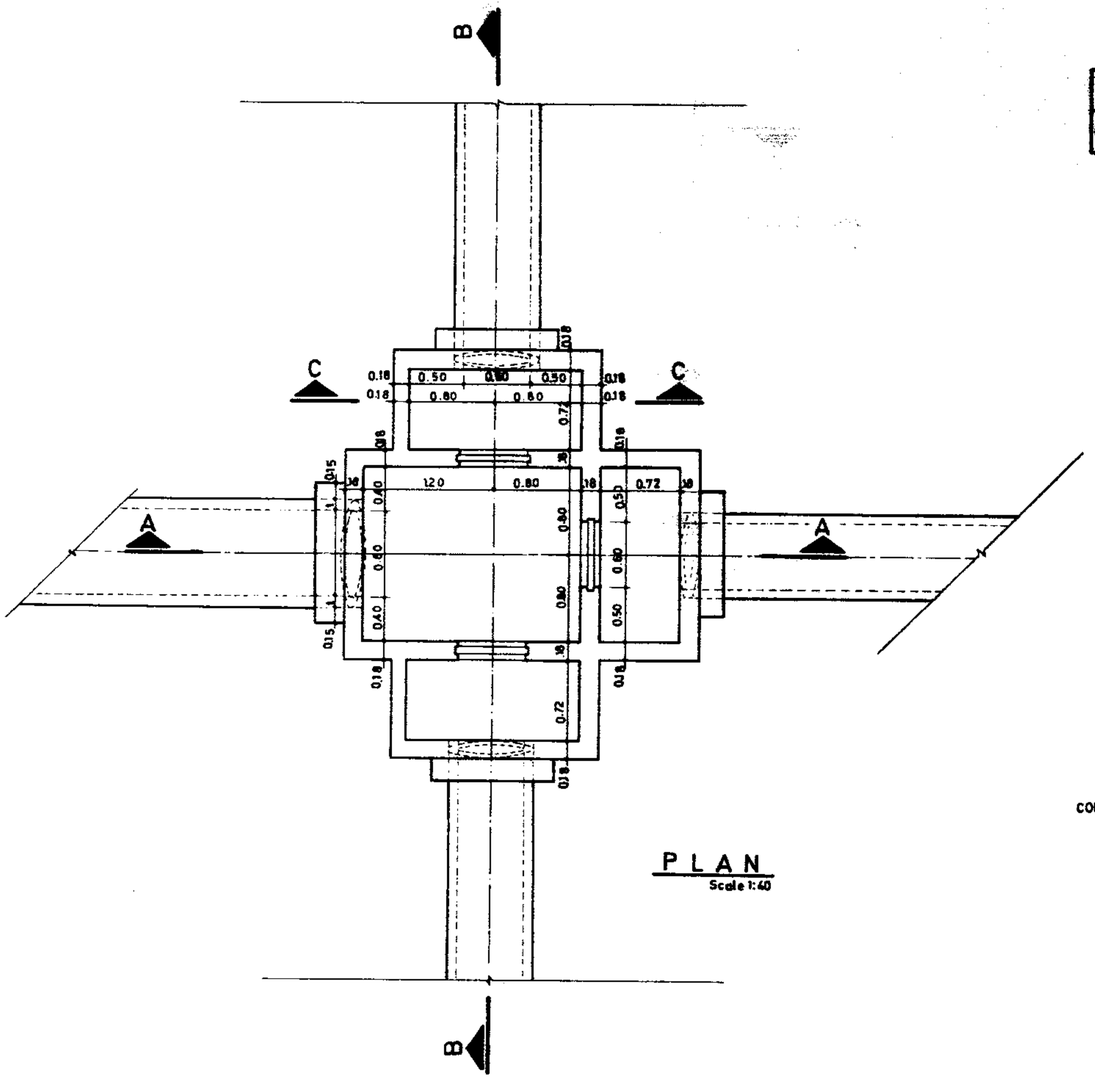

PLAN
Scale 1:40

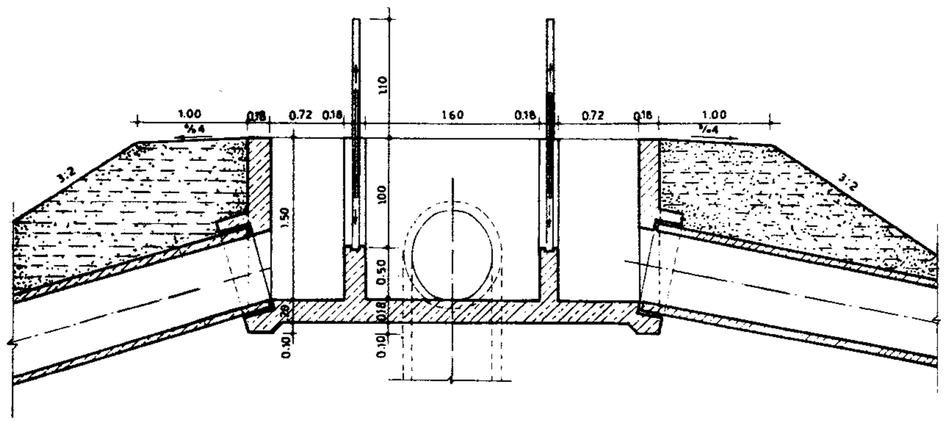

SECTION B-B
Scale 1:40

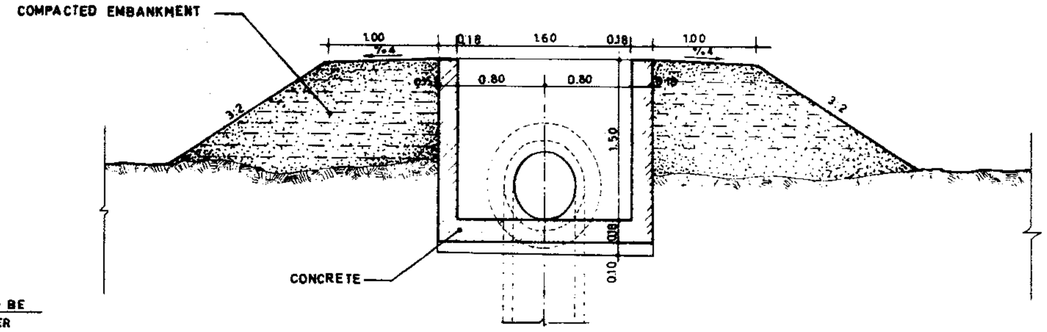

SECTION C-C
Scale 1:40

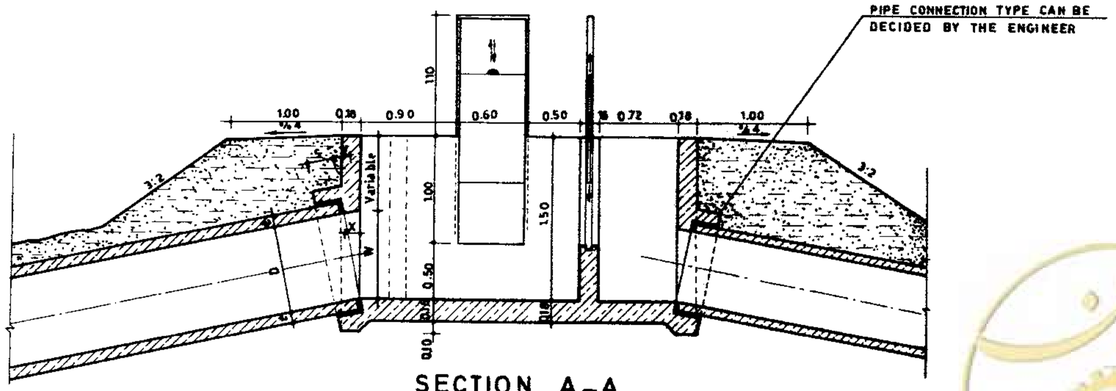

SECTION A-A
Scale 1:40

NOTE:
See notes on dwg.N° 12/7/1/01

REFERENCE DWGS.

1-FOR REINFORCEMENT SEE DWG. N°. - /3/05

2-FOR DETAIL AND DIMENSION OF PIPE CON TION SEE DWGS.N°. 17/1/1/01 TO 17/1/1/03

3-FOR GENERAL NOTES SEE DWGS.N° 2/1/01 TO 20/2/1/03

Scale: 1:40	IRRIGATION & DRAINAGE STANDARDS	
Date:	DWG. N° 12/7/1/05	DIVISION BOX (TYPE 5)
Approved:	Sheet N°.5 of 18 Rev N°	

ISLAMIC REPUBLIC OF IRAN
MINISTRY OF PLAN & BUDJET
TECHNICAL RESEARCH AND STANDARD BUREAU

www.noorepeyman.ir

R/Bar. kg.	Conc. m³	Form. m²
284.04	5.75	45.89

SLIDE GATE	0.40×0.80	0.50×0.80	0.60×0.80	0.70×0.80	0.80×0.80
Q*(l/s)	320	400	480	560	640

* FOR V=1.00 m/s

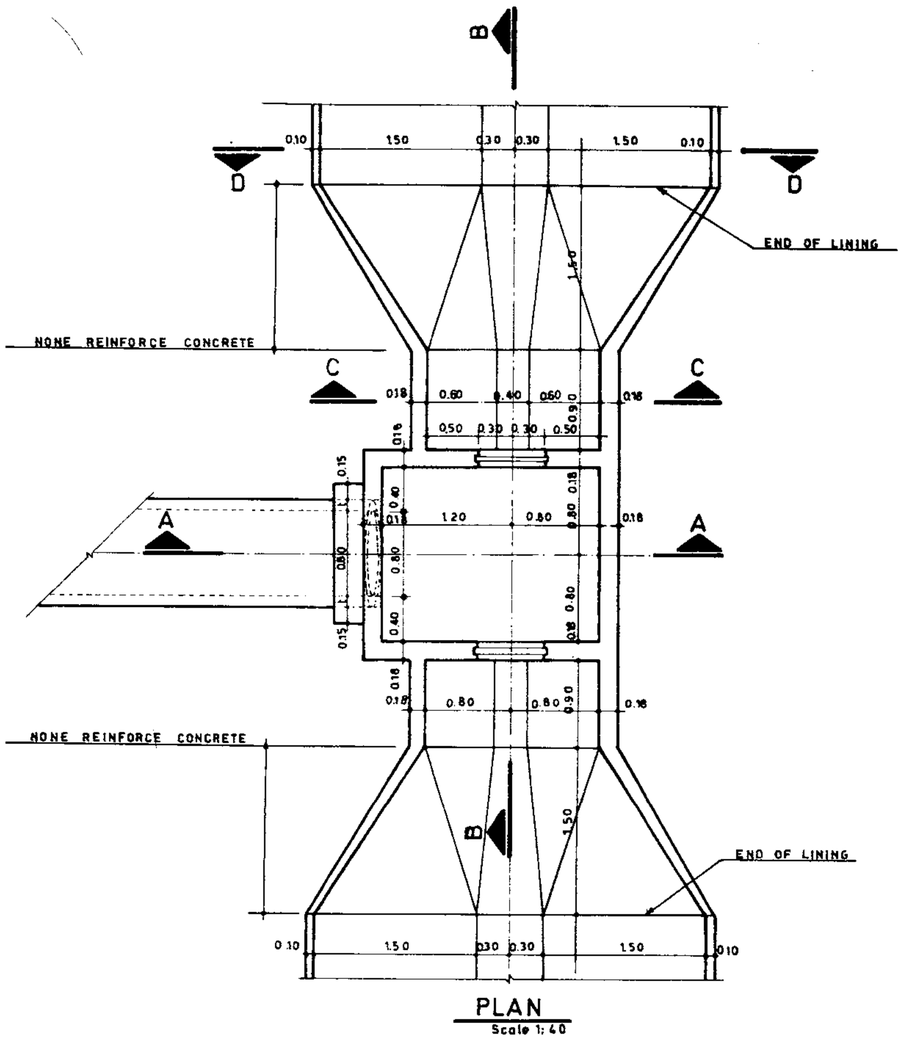

PLAN
Scale 1:40

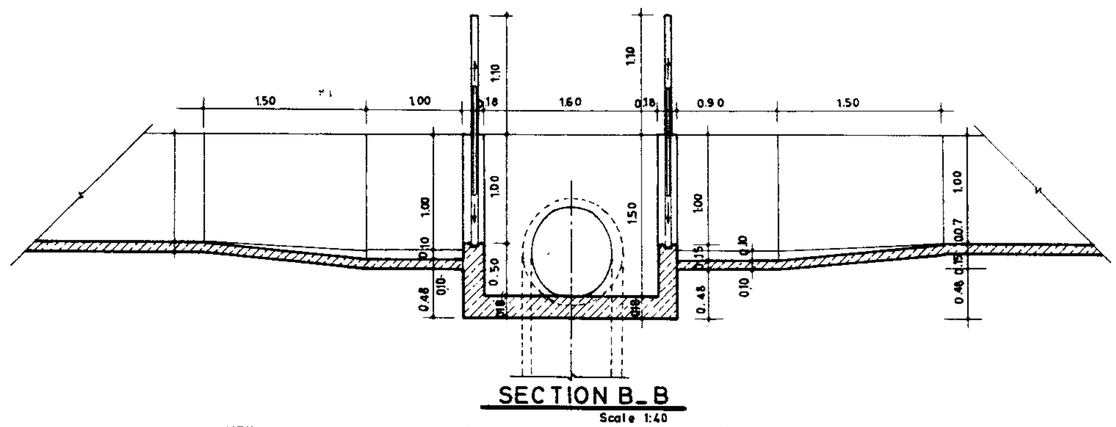

SECTION B_B
Scale 1:40

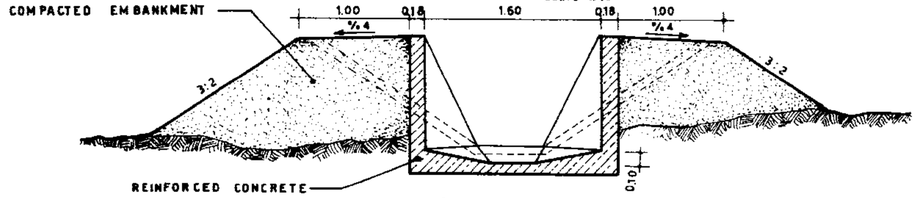

SECTION C_C
Scale 1:40

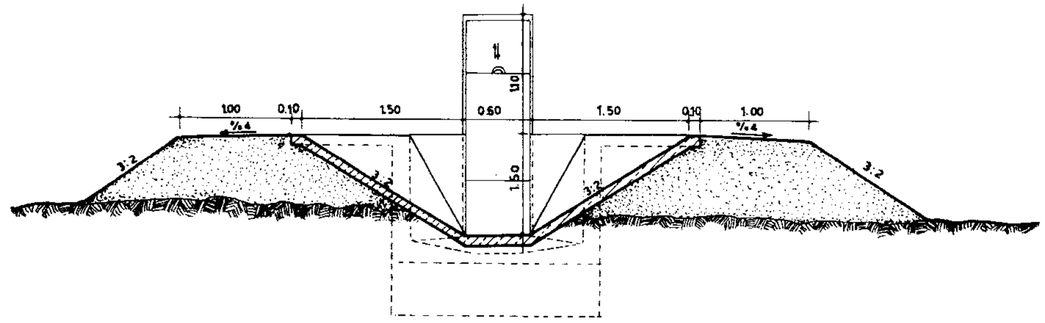

SECTION D_D
Scale 1:40

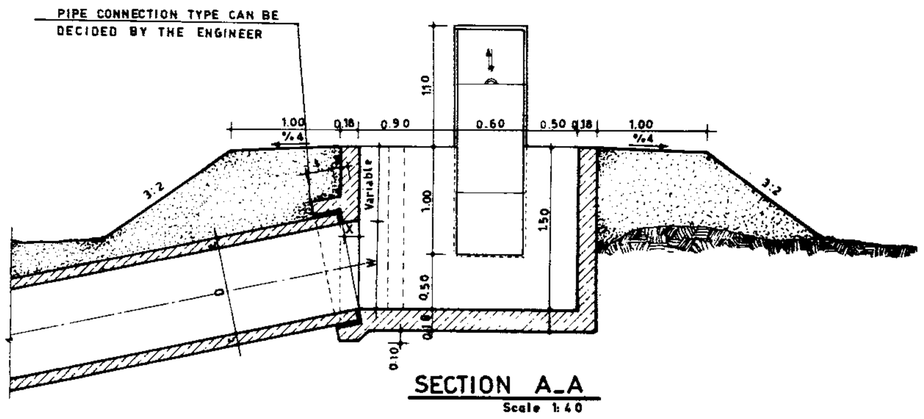

SECTION A_A
Scale 1:40

NOTE

See notes on dwg.№ 12/7/1/01

REFERENCE DWGS.

1- FOR REINFORCEMENT SEE DWG.№. [illegible]/3/06

2_FOR DETAIL AND DIMENSION OF PIPE CONNECTION SEE DWGS.№. 17/1/1/01 TO 17/1/1/03

3_FOR GENERAL NOTES SEE DWGS.№ 20/2/1/01 TO 20/2/1/03

Scale 1:40	IRRIGATION & DRAINAGE STANDARDS		
Date:	DWG. № 12/7/1/06		DIVISION BOX (TYPE 6)
Approved:	Sheet № 6 of 18	Rev.№	

ISLAMIC REPUBLIC OF IRAN
MINISTRY OF PLAN & BUDJET
TECHNICAL RESEARCH AND STANDARD BUREAU

omoorepeyman.ir

R/Bar kg	Conc. m^3	Form. m^2
426.83	4.52	34.22

SLIDE GATE	0.40×0.80	0.50×0.80	0.60×0.80	0.70×0.80	0.80×0.80
Q^*(l/s)	320	400	480	560	640

* FOR V =1.00 m/s

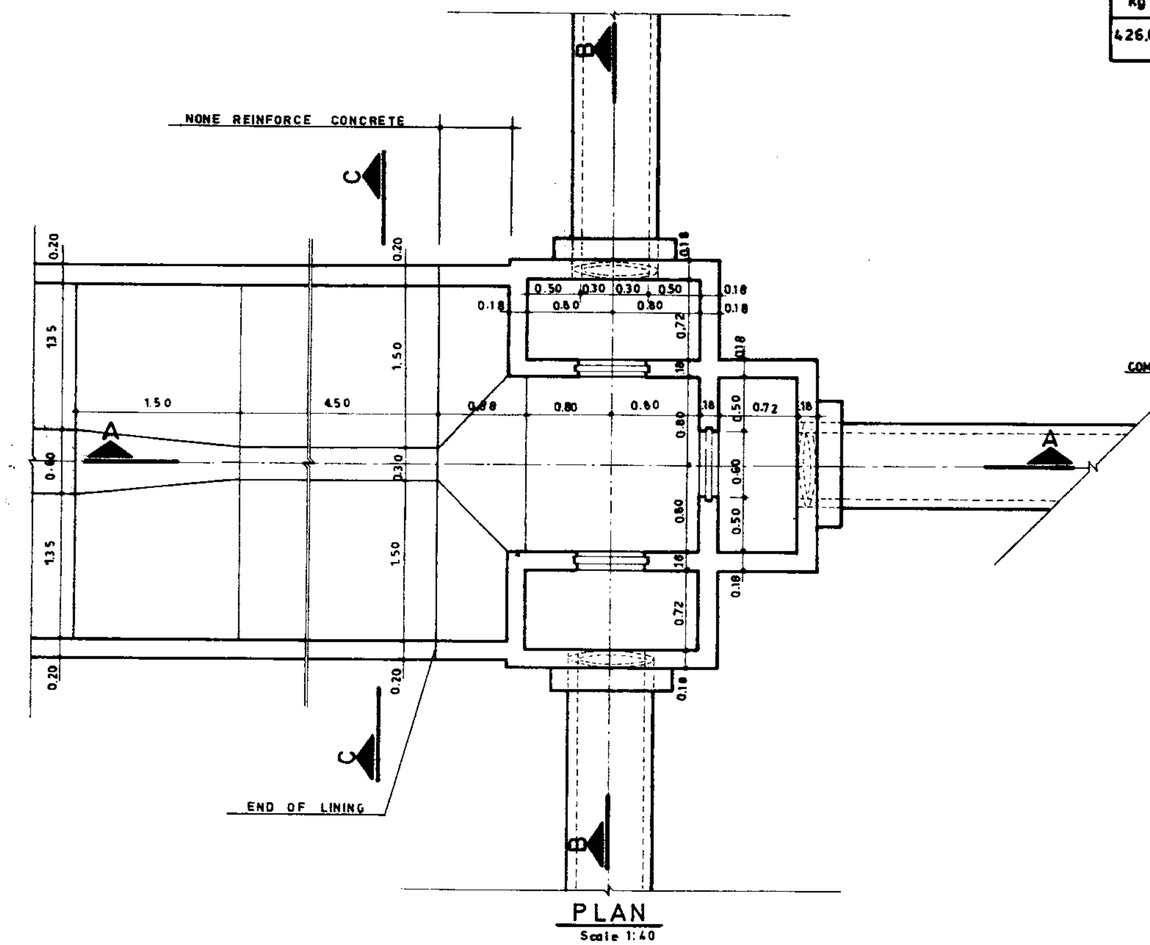

PLAN
Scale 1:40

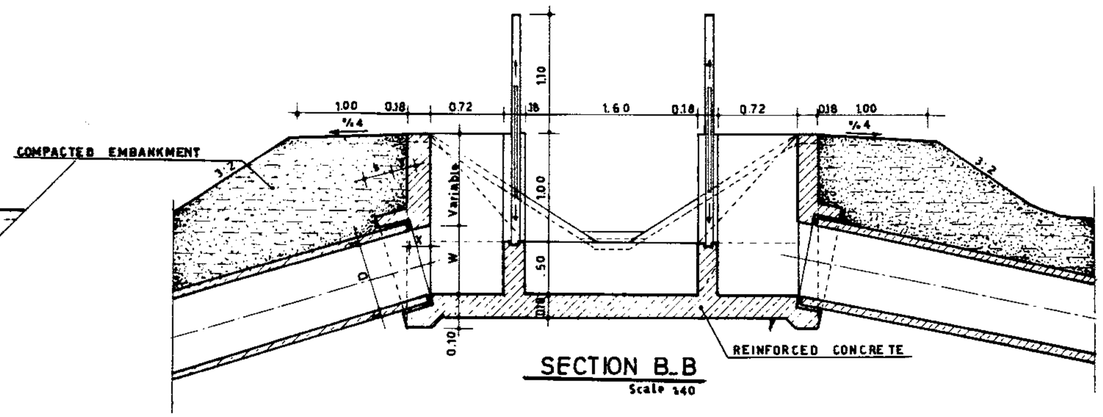

SECTION B_B
Scale 1:40

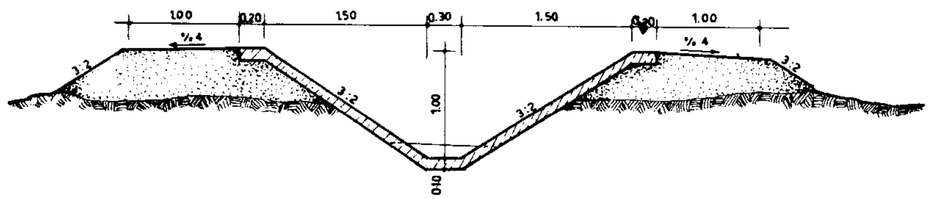

SECTION C_C
Scale 1:40

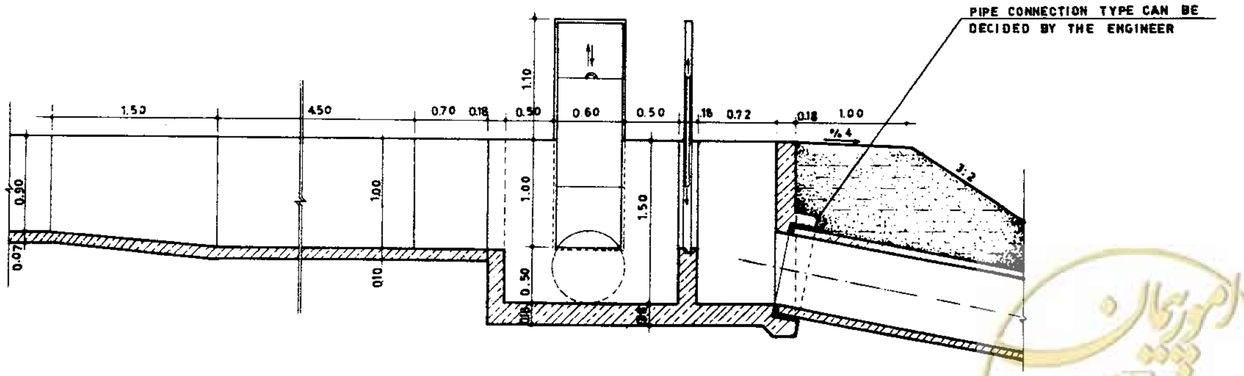

SECTION A_A
Scale 1:40

NOTE

See notes on dwg.№ 12/7/1/01

REFERENCE DWGS.

1- FOR REINFORCEMENT SEE DWG. №: 17/3/07

2-FOR DETAIL AND DIMENSION OF PIPE CONNECTION SEE DWGS. №17/1/1/01 TO 17/1/1/03

3_FOR GENERAL NOTES SEE DWGS. №: 20/2/1/01 TO 20/2/1/03

Scale: 1:40	IRRIGATION & DRAINAGE STANDARDS	
Date:	DWG. № 12/7/1/07	DIVISION BOX (TYPE7)
Approved:	Sheet № 7 of 18 Rev.№	

ISLAMIC REPUBLIC OF IRAN
MINISTRY OF PLAN & BUDJET
TECHNICAL RESEARCH AND STANDARD BUREAU

@omoorepeyman.ir

R/Bar. kg.	Conc. m3	Form. m²
264.26	6.46	49.12

SLIDE GATE	0.40×0.80	0.50×0.80	0.60×0.80	0.70×0.80	0.80×0.80
Q^{*} (l/s)	320	400	480	560	540

* FOR V =1.00 m/s

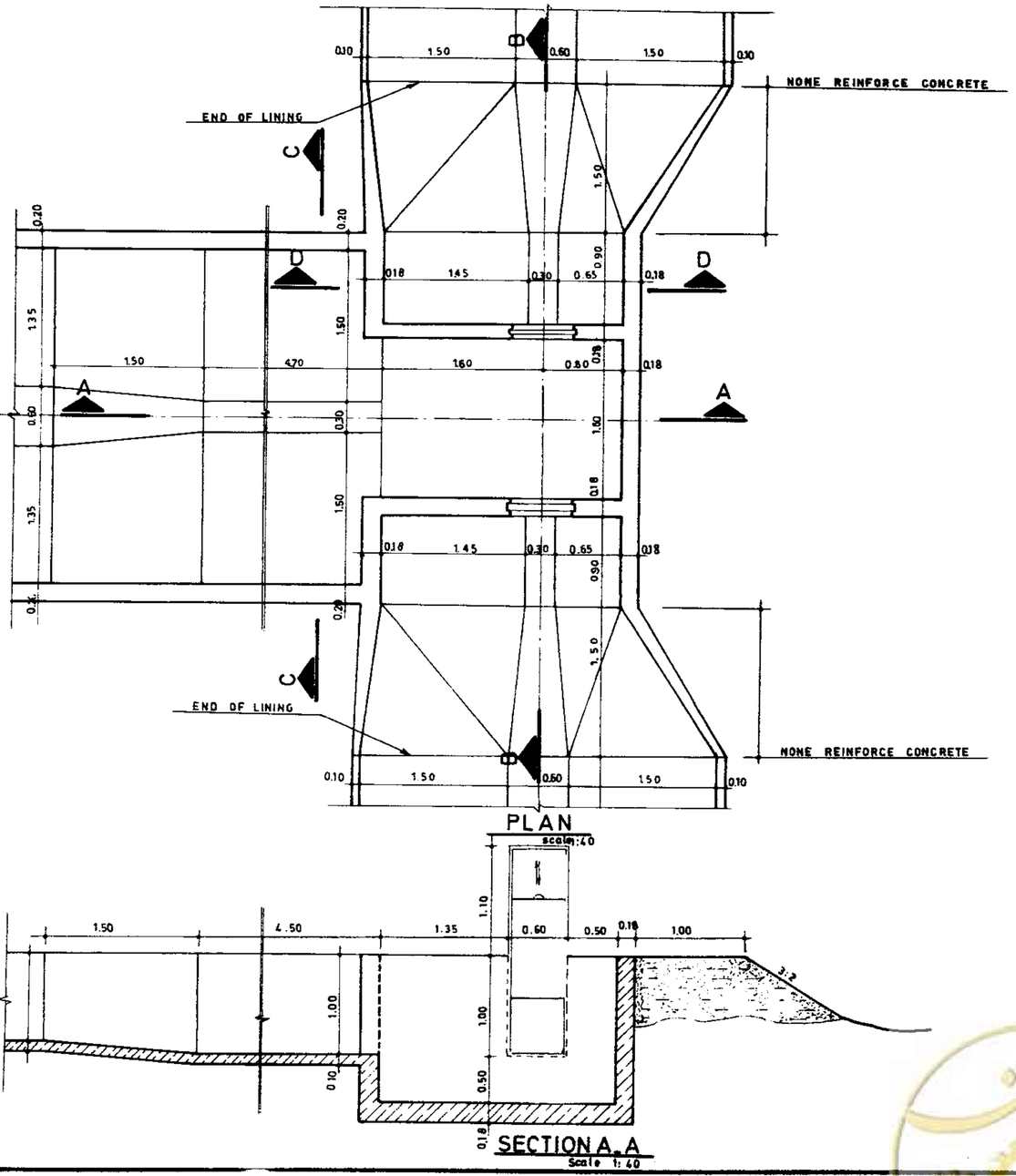

PLAN
scale:1:40

SECTION A_A
Scale 1:40

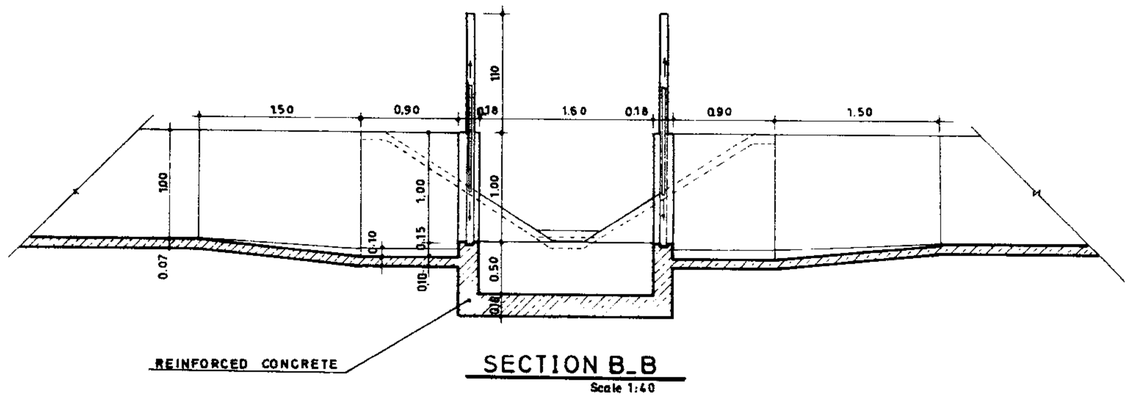

SECTION B_B
Scale 1:40

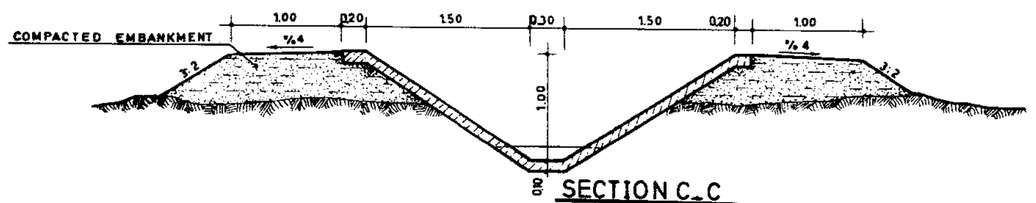

SECTION C_C
Scale 1:40

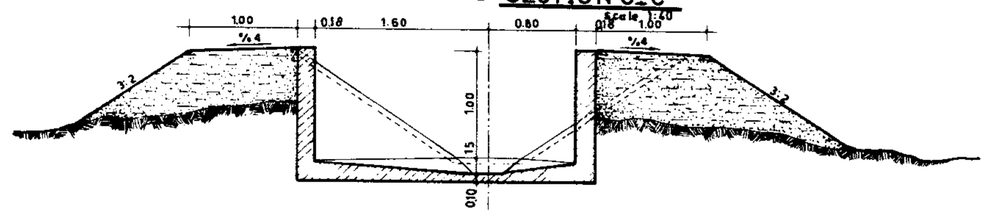

SECTION D_D
Scale 1:40

NOTE

See notes on dwg.№ 12/7/1/01

REFERENCE DWGS.

1-FOR REINFORCEMENT SEE DWG.№. [illegible]7/3/08

2_FOR DETAIL AND DIMENSION OF PIPE CONNECTION SEE DWGS №_17/1/1/01 TO 17/1/1/03

3_FOR GENERAL NOTES SEE DWGS.№ 20/2/1/01 TO 20/2/1/03

Scale: 1:40	IRRIGATION & DRAINAGE STANDARDS		ISLAMIC REPUBLIC OF IRAN MINISTRY OF PLAN & BUDJET TECHNICAL RESEARCH AND STANDARD BUREAU
Date:	DWG №: 12/7/1/08		
Approved:	Sheet №: 8 of 18	Rev.№	DIVISION BOX (TYPE 8)

omoorepeyman.ir

R/Bar kg	Conc. m3	Form. m²
333.33	3.61	24.11

SLIDE GATE	0.40×0.80	0.50×0.80	0.60×0.80	0.70×0.80	0.80×0.80
Q*(l/s)	320	400	480	560	640

* FOR V=1.00 m/s

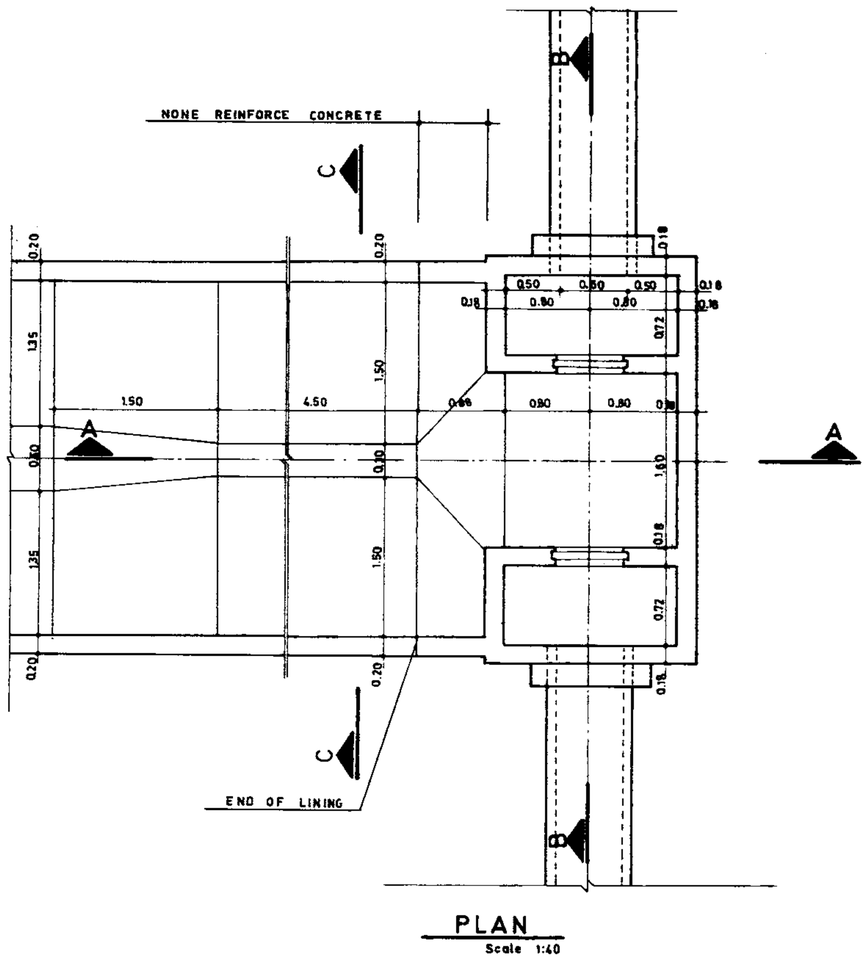

PLAN
Scale 1:40

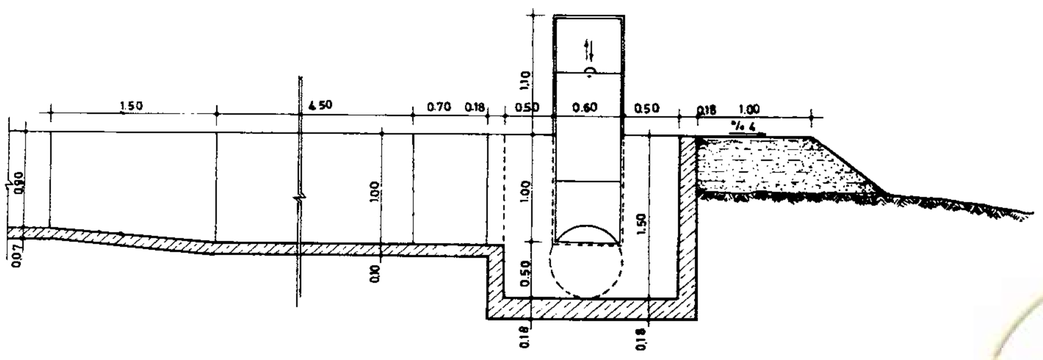

SECTION A_A
Scale 1:40

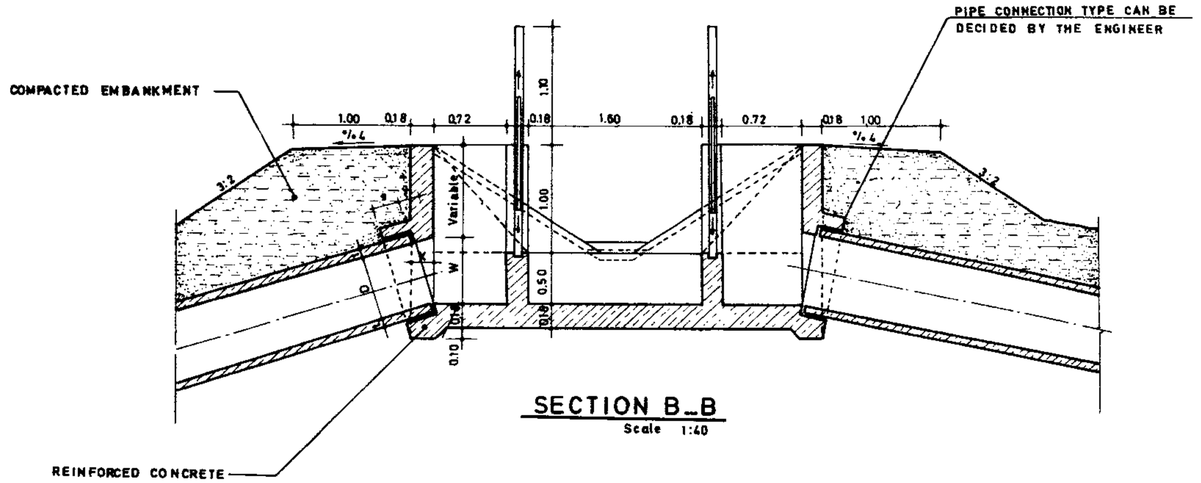

SECTION B_B
Scale 1:40

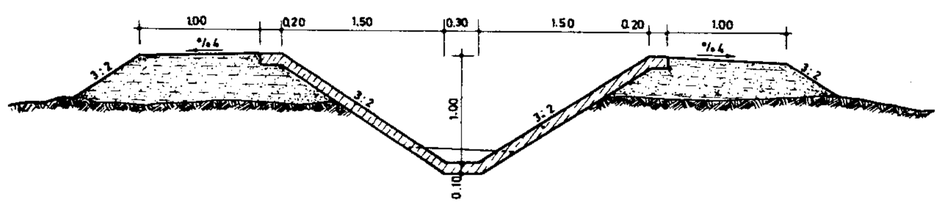

SECTION C_C
Scale 1:40

NOTE:
See notes on dwg.№ 12/7/1/01

REFERENCE DWGS.
1_FOR REINFORCEMENT SEE DWG. №. 12/7/3/09
2_FOR DETAIL AND DIMENSION OF PIPE CONNECTION SEE DWGS.№ 17/1/1/01 TO 17/1/1/03
3_FOR GENERAL NOTES SEE DWGS.№ 20/2/1/01 TO 20/2/1/03

Scale: 1:40	IRRIGATION & DRAINAGE STANDARDS	
Date:	DWG. № 12/7/1/09	DIVISION BOX (TYPE 9)
Approved:	Sheet № 9 of 18 Rev. №	

ISLAMIC REPUBLIC OF IRAN
MINISTRY OF PLAN & BUDJET
TECHNICAL RESEARCH AND STANDARD BUREAU

omoorepeyman.ir

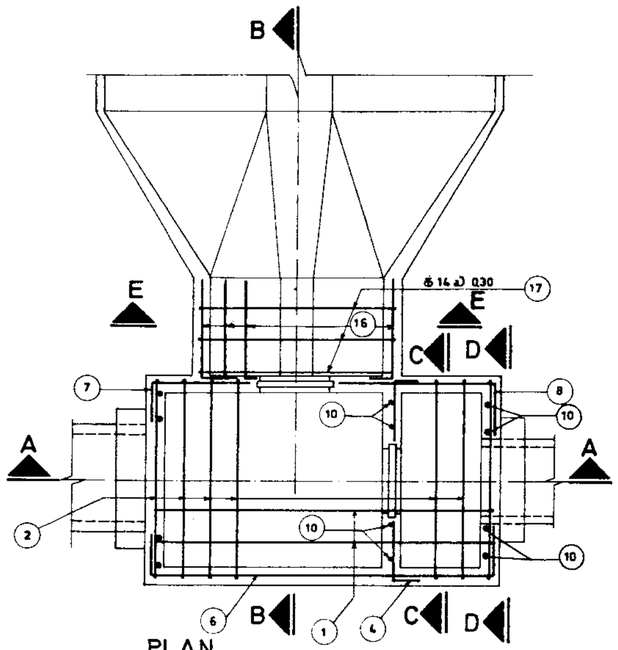

PLAN
Scale 1:40

SECTION A_A
Scale 1:40

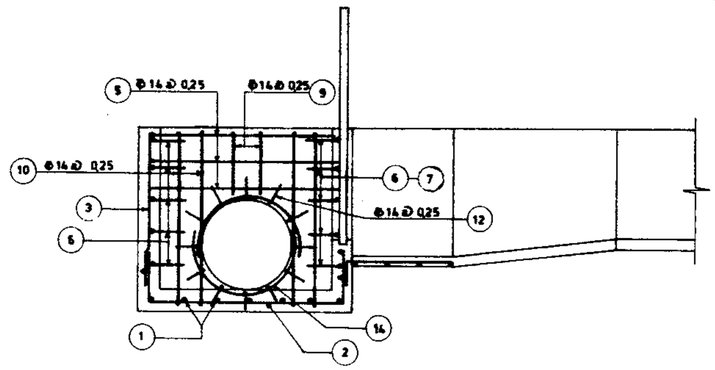

SECTION B_B
Scale 1:40

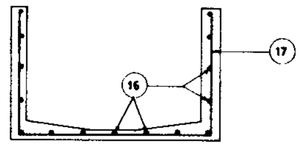

SECTION E_E
Scale 1:40

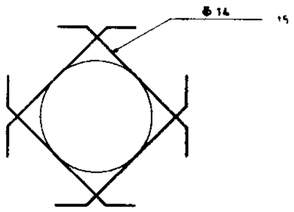

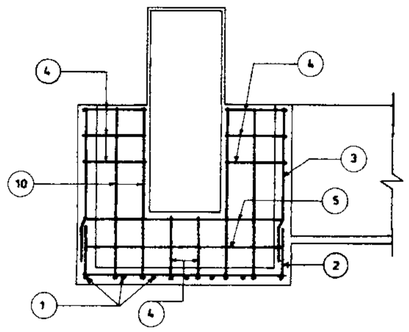

SECTION C-C
Scale 1:40

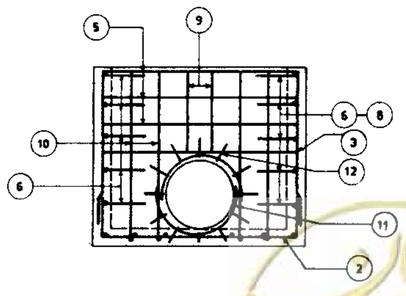

SECTION D_D
Scale 1:40

POS.	Nº	FORM	UNIT LENG.	TOTAL LENG.
1	8	2.80	2.80	22.40
2	13	0.55 — 1.81 — 0.55	2.91	37.83
3	24	1.45	1.45	34.80
4	12	0.55 — 0.20	0.75	9.00
5	10	0.20 — 1.81 — 0.20	2.21	22.10
6	8	0.35 — 3.08 — 0.45	3.88	31.04
7	4	0.35 — 0.92	1.27	5.08
8	4	0.45 — 1.45	1.90	7.60
9	8	0.50	0.50	4.00
10	12	0.20 — 1.55	1.75	21.00
11	3	0.40 — 0.40	3.79	11.37
12	24	0.50 — 0.30	0.80	19.20
13	8	0.75	0.75	6.00
14	3	0.40 — 0.40	4.66	13.98
15	8	0.20 — 1.15 — 0.20	1.55	12.40
16	16	0.30 — 1.05	1.35	21.60
17	3	1.15 — 1.81 — 1.15	4.11	12.33
				291.73
291.73		x 1.21 =		352.99 kg

ALL BARS ARE Φ14 (1.21 kg/m)

REFERENCE DWGS. FOR PLAN & SECTION SEE DWG. Nº 12/7/1/01

Scale: 1:40	IRRIGATION & DRAINAGE STANDARDS		
Date:	DWG. Nº 12/7/3/01		DIVISION BOX (TYPE 1) REINFORCEMENT
Approved:	Sheet Nº 10 of 18	Rev. Nº	

ISLAMIC REPUBLIC OF IRAN
MINISTRY OF PLAN & BUDJET
TECHNICAL RESEARCH AND STANDARD BUREAU

omoorepeyman.ir

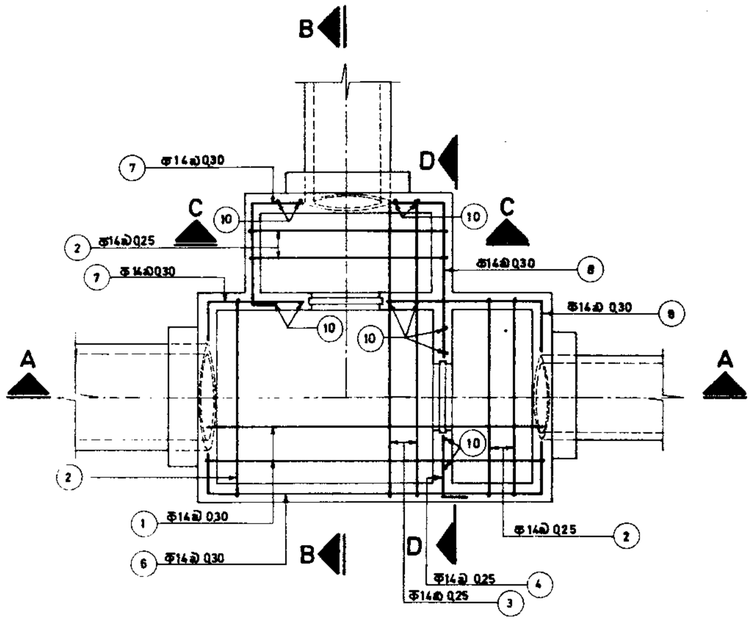

PLAN
Scale 1:40

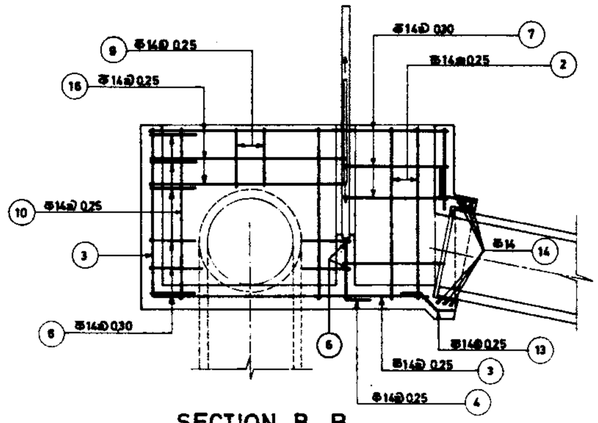

SECTION B_B
Scale 1:40

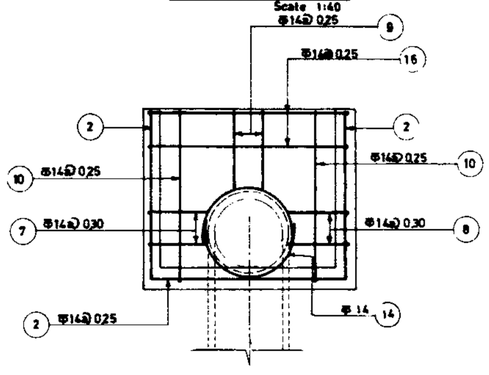

SECTION C-C
Scale 1:40

POS	Nº	FORM	UNIT LENG.	TOTAL LENG.
1	8	3.08	3.08	24.64
2	11	1.55 / 1.81 / 1.55	4.91	54.01
3	8	1.55 / 2.71	4.26	34.08
4	8	0.55 / 0.20	0.75	6.00
5	2	0.45 / 2.70 / 0.20	3.35	6.70
6	10	0.35 / 3.08 / 0.45	3.88	38.80
7	8	0.35 / 0.95 / 0.20	1.50	12.00
8	8	1.45 / 0.45	1.90	15.20
9	9	0.50	0.50	4.50
10	20	1.55 / 0.20	1.75	35.00
11	3	0.40 (circle) 0.40	4.66	13.98
12	34	0.40 / 0.40	0.80	27.20
13	13	0.75	0.75	9.75
14	6	0.40 (circle) 0.40	3.79	22.74
15	12	0.20 / 1.15 / 0.20	1.55	18.60
16	12	0.20 / 1.81 / 0.20	2.21	26.52
				349.72
349.72	X	1.21	=	423.16 kg

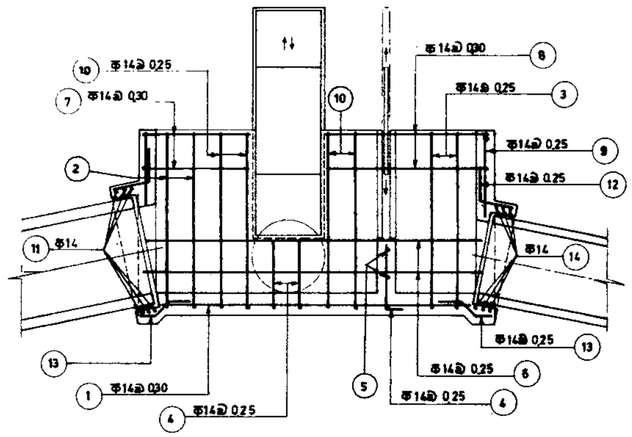

SECTION A_A
Scale 1:40

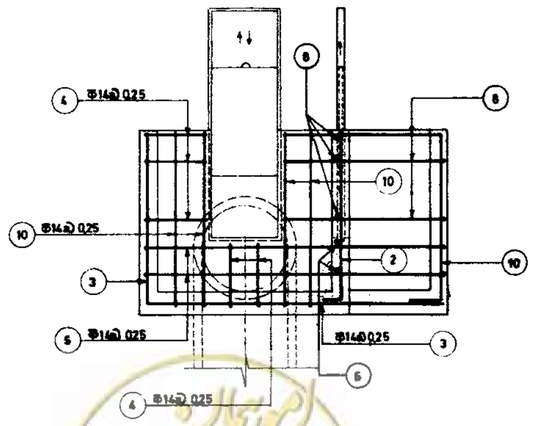

SECTION D-D
Scale 1:40

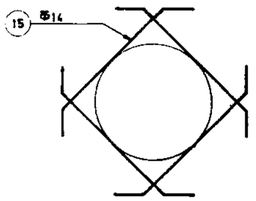

ALL BARS ARE Φ14 (1.21 kg/m)

REFERENCE DWGS. FOR PLAN & SECTION SEE DWG. Nº 12/7/1/02

Scale 1:40	IRRIGATION & DRAINAGE STANDARDS	
Date	DWG. Nº 12/7/3/02	DIVISION BOX (TYPE 2) REINFORCEMENT
Approved:	Sheet Nº 11 of 18 Rev. Nº	

ISLAMIC REPUBLIC OF IRAN
MINISTRY OF PLAN & BUDJET
TECHNICAL RESEARCH AND STANDARD BUREAU

@omoorepeymani.ir

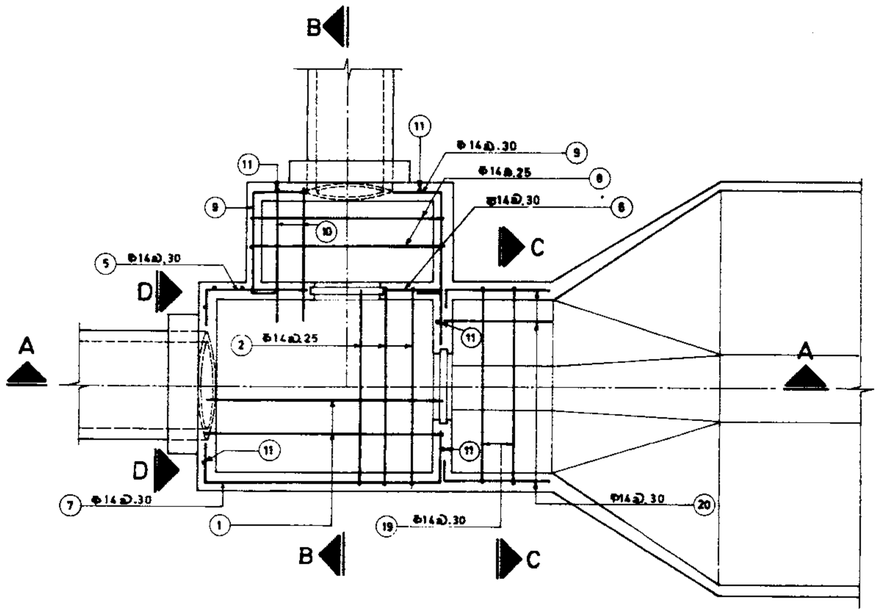

PLAN
Scale 1:40

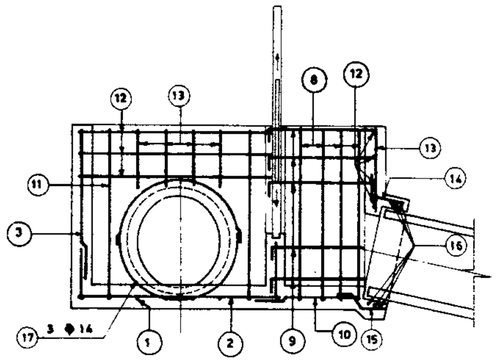

SECTION B_B
Scale 1:40

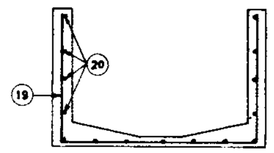

SECTION C_C
Scale 1:40

POS	Nº	FORM	UNIT LENG.	TOTAL LENG.
1	8	2.05 — 0.55	2.60	20.80
2	9	0.55 — 1.81 — 0.55	2.91	26.19
3	2	0.25 — 2.18 — 2.18 — 1.78	6.64	13.28
4	16	1.45	1.45	23.20
5	4	0.35 — 0.95	1.30	5.20
6	4	0.55 — 0.55	1.10	4.40
7	4	0.35 — 2.18 — 0.55	3.08	12.32
8	4	1.55 — 1.81 — 1.55	4.91	19.64
9	12	0.25 — 0.95 — 0.45	1.65	19.80
10	7	1.20	1.20	8.40
11	6	1.55 — 0.25	1.80	10.80
12	7	1.80	1.80	12.60
13	9	0.55	0.55	4.95
14	20	0.50 — 0.30	0.80	16.00
15	9	0.75	0.75	6.75
16	3	0.40 — 0.40	4.66	13.98
17	3	0.40 — 0.40	3.79	11.37
18	8	0.20 — 1.15 — 0.20	1.55	12.40
19	3	1.15 — 1.81 — 1.15	4.11	12.33
20	16	0.25 — 1.05	1.30	20.80
				275.21
275.21		X 121 =		333.00 kg

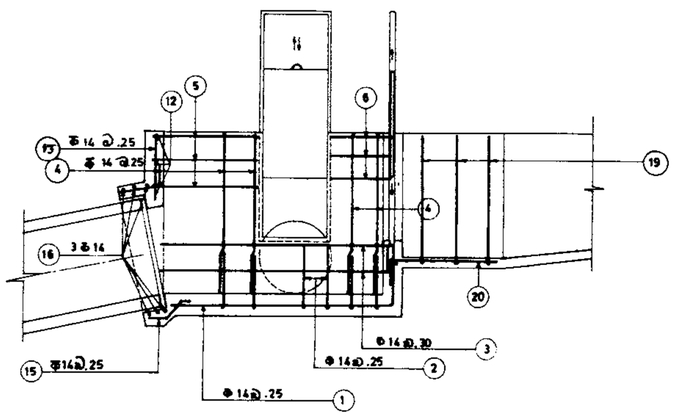

SECTION A_A
Scale 1:40

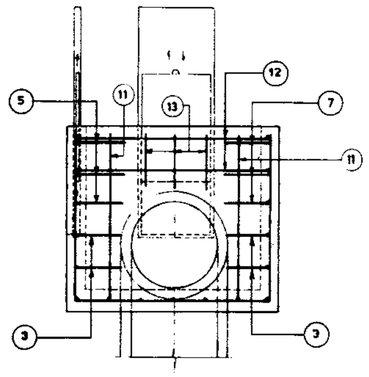

SECTION D_D
Scale 1:40

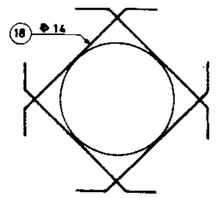

ALL BARS ARE Φ14 (1.21 kg/m)

REFERENCE DWGS. FOR PLAN & SECTION SEE DWG.Nº 12/7/1/03

Scale: 1:40	IRRIGATION & DRAINAGE STANDARDS	
Date:	DWG. Nº 12/7/3/03	DIVISION BOX (TYPE 3) REINFORCEMENT
Approved:	Sheet Nº 12 of 18 — Rev. Nº	

ISLAMIC REPUBLIC OF IRAN
MINISTRY OF PLAN & BUDJET
TECHNICAL RESEARCH AND STANDARD BUREAU

omoorepeyman.ir

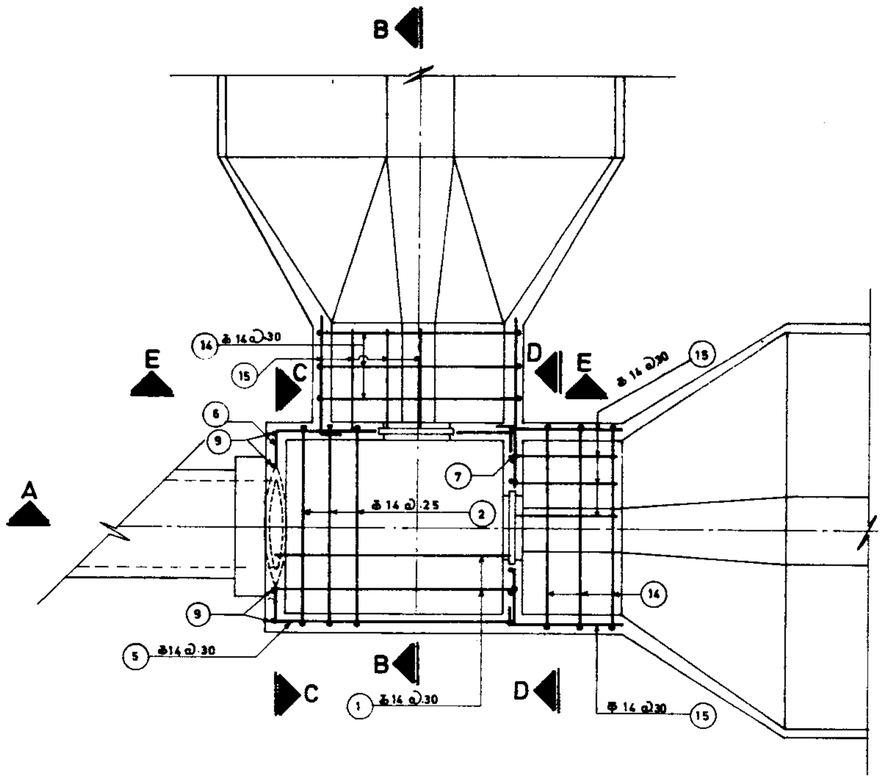

PLAN
Scale 1:40

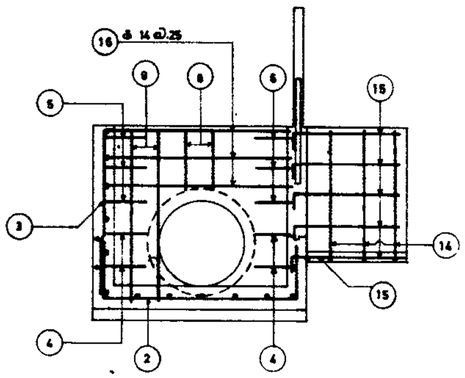

SECTION B-B
Scale 1:40

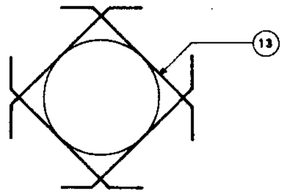

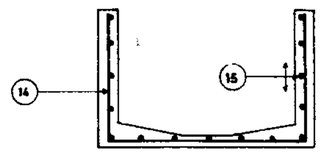

SECTION E-E
Scale 1:40

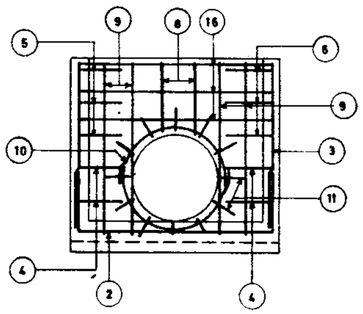

SECTION C-C
Scale 1:40

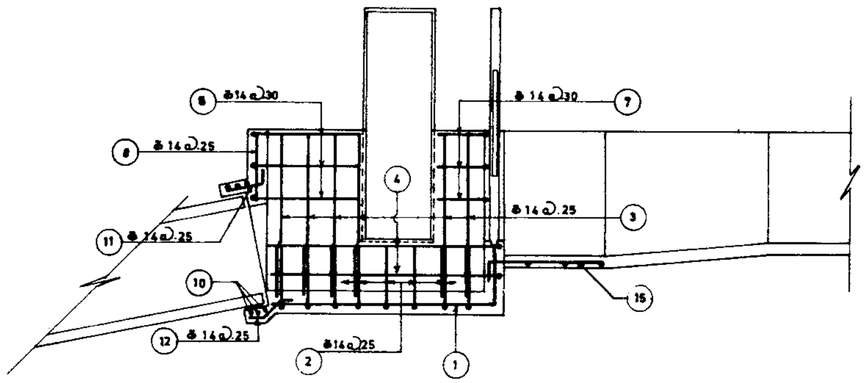

SECTION A-A
Scale 1:40

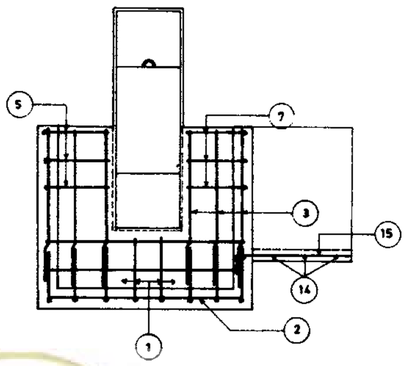

SECTION D-D
Scale 1:40

POS.	Nº	Form	UNIT LENG.	TOTAL LENG.
1	8	0.55 \ 2.19	2.73	21.84
2	8	0.55 \ 1.81 \ 0.55	2.91	23.28
3	19	1.45	1.45	27.55
4	2	0.35 \ 2.21 \ 0.35 \ 2.21 \ 1.81	6.93	13.86
5	4	0.35 \ 2.10 \ 0.55	3.08	12.32
6	4	0.35 \ 0.95	1.30	5.20
7	4	0.45 \ 0.45	0.90	3.60
8	3	0.60	0.60	1.80
9	4	1.55 \ 0.25	1.80	7.20
10	3	0.40 ○ 0.40	4.66	13.98
11	12	0.50 \ 0.30	0.80	9.60
12	5	0.75	0.75	3.75
13	4	0.20 \ 1.15 \ 0.20	1.55	6.20
14	6	1.15 \ 1.81 \ 1.15	4.11	24.66
15	32	0.25 \ 1.05	1.30	41.60
16	3	1.80	1.80	5.40
				221.84
221.84		x 1.21 =		268.43 kg

REFERENCE DWGS: FOR PLAN & SECTION SEE DWG.Nº 12/7/1/04

Scale: 1:40	IRRIGATION & DRAINAGE STANDARDS		
Date:	DWG. Nº 12/7/3/04	DIVISION BOX (TYPE 4) REINFORCEMENT	
Approved:	Sheet Nº 13 of 18	Rev Nº	

ISLAMIC REPUBLIC OF IRAN
MINISTRY OF PLAN & BUDJET
TECHNICAL RESEARCH AND STANDARD BUREAU

omoorepeyman.ir

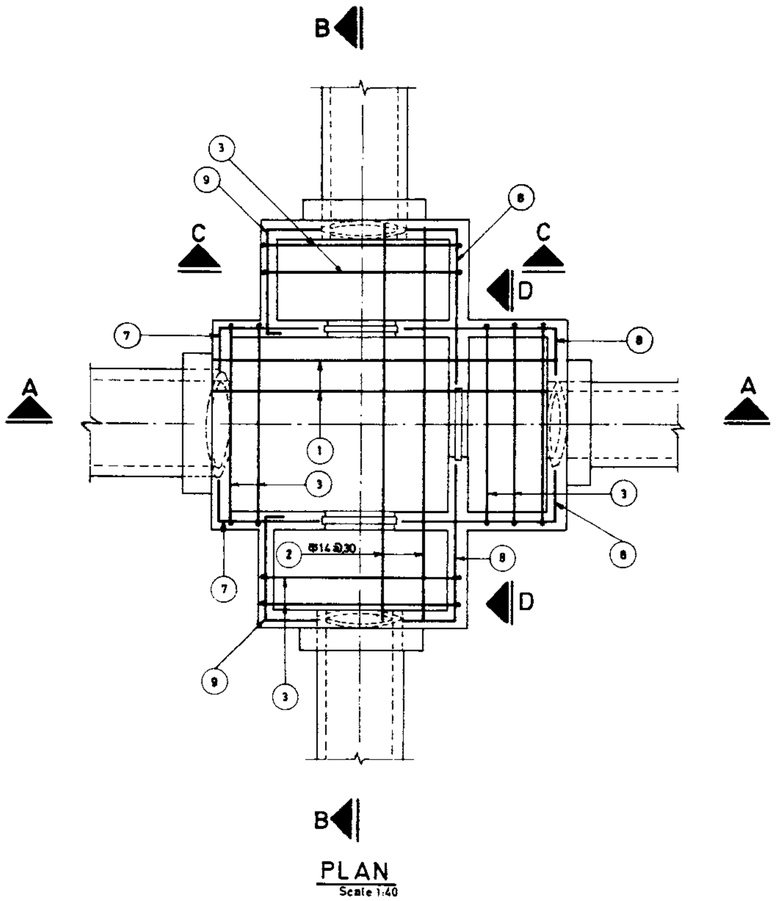

PLAN
Scale 1:40

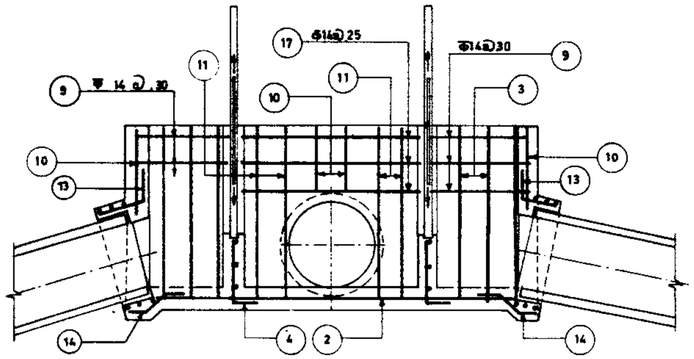

SECTION B_B
Scale 1:40

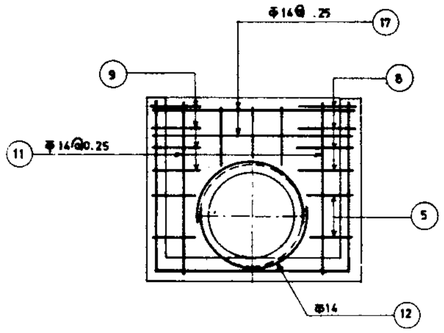

SECTION C_C
Scale 1:40

POS	Nº	FORM	UNIT LENG.	TOTAL LENG.
1	7	3.08	3.08	21.56
2	7	3.58	3.58	25.06
3	14	1.55 | 1.81 | 1.55	4.91	68.74
4	9	0.55 | 0.20	0.75	6.75
5	2	0.45 | 3.61 | 0.45	4.51	9.02
6	4	0.45 | 3.11 | 0.45	4.01	16.04
7	8	0.45 | 0.95	1.40	11.20
8	16	0.45 | 1.45	1.90	30.40
9	8	0.50 | 0.90 | 0.20	1.60	12.80
10	13	0.50	0.50	6.50
11	26	1.55 | 0.20	1.75	45.50
12	9	0.40 ○ 0.40	3.79	34.11
13	48	0.40 | 0.40	0.80	38.40
14	17	0.75	0.75	12.75
15	3	0.40 ○ 0.40	4.66	13.98
16	16	0.20 \ 1.15 \ 0.20	1.55	24.8
17	16	0.20 | 1.81 | 0.20	2.21	35.36
				412.97
412.97		X 1.21 =	499.69	kg.

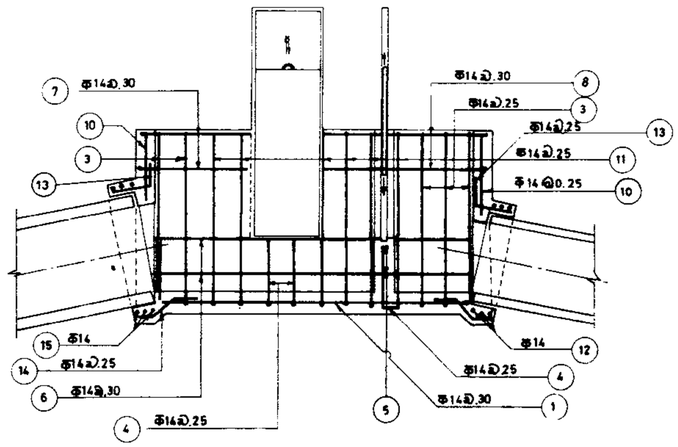

SECTION A_A
Scale 1:40

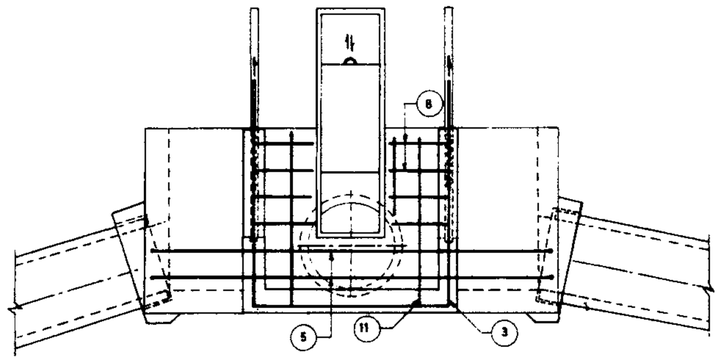

SECTION D_D
Scale 1:40

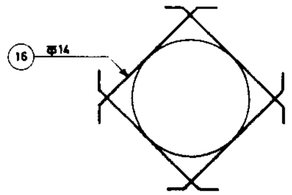

ALL BARS ARE Φ14(1.21 kg/m)

REFERENCE DWGS. FOR PLAN & SECTION: SEE DWG.Nº: 12/7/1/05

Scale: 1:40	IRRIGATION & DRAINAGE STANDARDS		
Date:	DWG. Nº 12/7/3/05		DIVISION BOX(TYPE 5) REINFORCEMENT
Approved:	Sheet. Nº 14 of 18	Rev. Nº	

ISLAMIC REPUBLIC OF IRAN
MINISTRY OF PLAN & BUDJET
TECHNICAL RESEARCH AND STANDARD BUREAU

omoorepeyman.ir

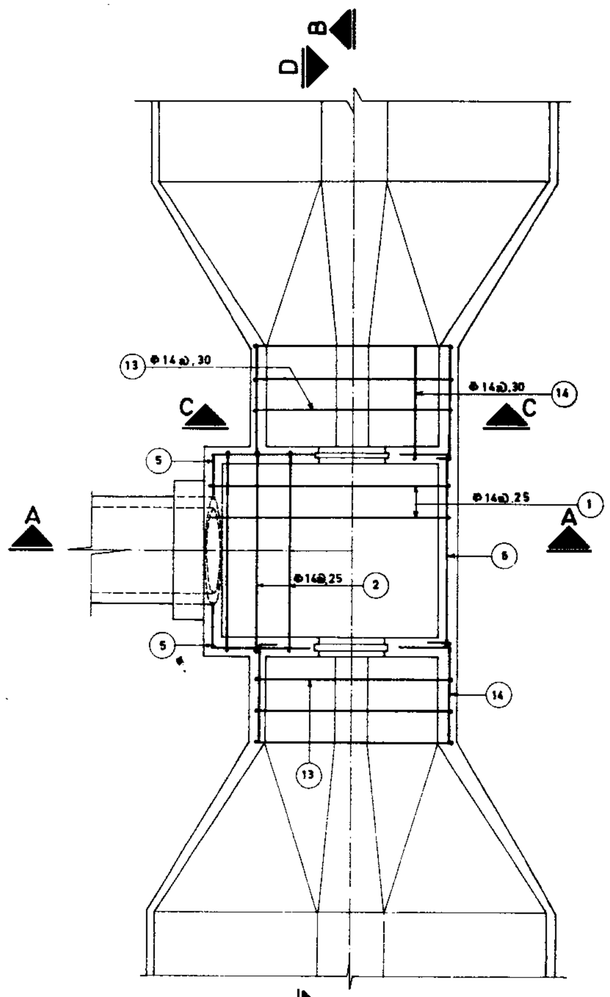

PLAN
Scale 1:40

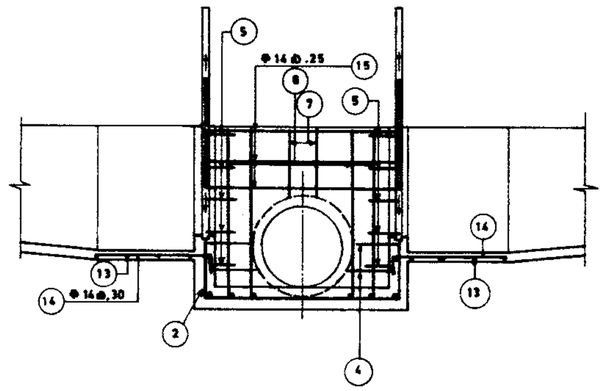

SECTION B_B
Scale 1:40

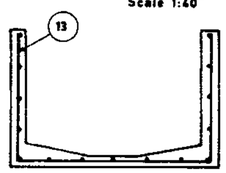

SECTION C_C
Scale 1:40

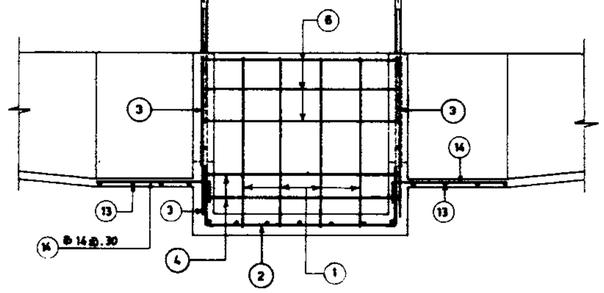

SECTION D_D
Scale 1:40

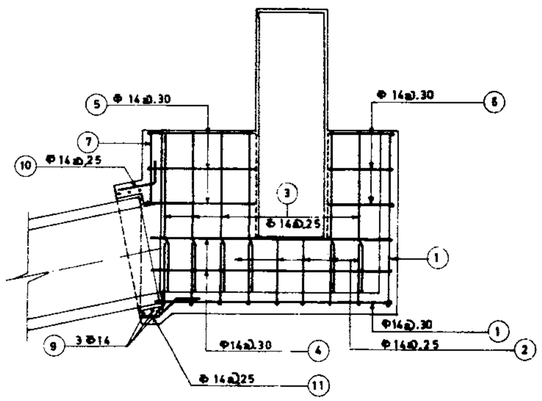

SECTION A_A
Scale 1:40

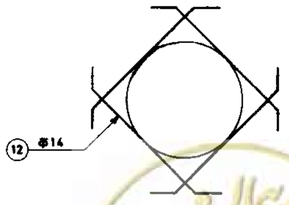

POS.	Nº	FORM	UNIT LENG.	TOTAL LENG.
1	9	1.55 / 2.10	3.65	32.85
2	10	0.55 / 1.81 / 0.55	2.91	29.10
3	16	1.45	1.45	23.20
4	2	0.35 / 2.78 / 2.18 / 1.78 / 0.35	6.84	13.68
5	8	0.35 / 0.95	1.30	10.40
6	4	0.55 / 1.78 / 0.55	2.88	11.52
7	3	0.80	0.60	1.80
8	4	1.55 / 0.20	1.75	7.00
9	3	0.40 / 0.40	4.66	13.98
10	12	0.50 / 0.30	0.80	9.60
11	5	0.75	0.75	3.75
12	4	0.20 / 1.15 / 0.20	1.55	6.20
13	6	1.15 / 1.81 / 1.15	4.11	24.66
14	32	0.30 / 1.05	1.30	41.60
15	3	1.80	1.80	5.40
				234.74
234.74		X 121 =	284.04 kg	

ALL BARS ARE Φ14 (1.21 Kg/m)

REFERENCE DWGS. FOR PLAN & SECTION SEE DWG.Nº: 12/7/1/06

Scale 1:40	IRRIGATION & DRAINAGE STANDARDS		
Date:	DWG. Nº 12/7/3/06		DIVISION BOX (TYPE 6) REINFORCEMENT
Approved:	Sheet. Nº 15 of 18	Rev. Nº	

ISLAMIC REPUBLIC OF IRAN
MINISTRY OF PLAN & BUDJET
TECHNICAL RESEARCH AND STANDARD BUREAU

omoorepeyman.ir

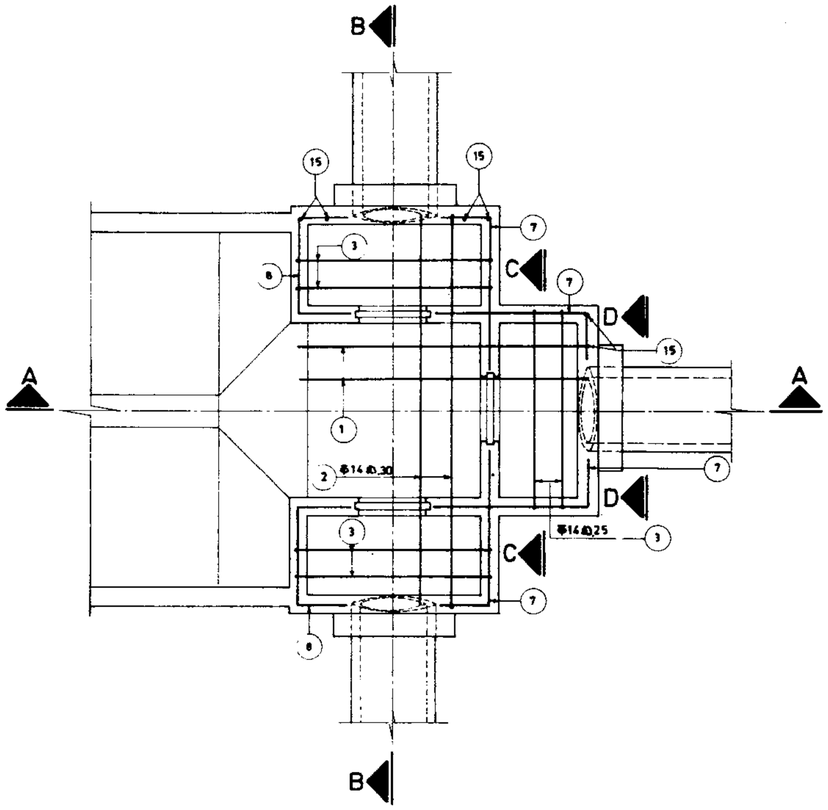

PLAN
Scale 1:40

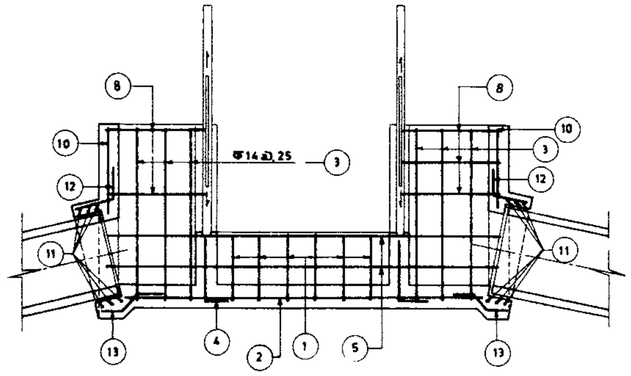

SECTION B-B
Scale 1:40

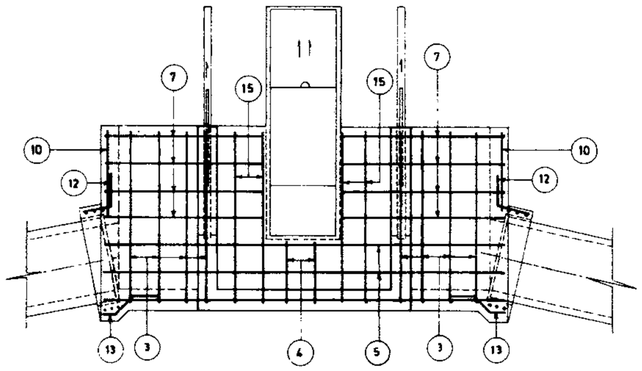

SECTION C-C
Scale 1:40

POS	Nº	Form	UNIT LENG.	TOTAL LENG.
1	7	0.55 — 2.68	3.23	22.61
2	7	3.58	3.58	25.06
3	12	1.55 — 1.81 — 1.55	4.91	58.92
4	9	0.55 — 0.20	0.75	6.75
5	4	0.45 — 3.61 — 0.45	4.51	18.04
6	4	0.30 — 2.70 — 0.45	3.45	13.80
7	16	0.45 — 1.44	1.89	30.24
8	8	0.45 — 0.90 — 0.45	1.80	14.40
9	12	0.20 — 1.81 — 0.20	2.21	26.52
10	9	0.70	0.70	6.30
11	9	0.40 ( ) 0.40	3.79	34.11
12	33	0.40 — 0.40	0.80	26.40
13	12	0.75	0.75	9.00
14	12	0.20 — 1.15 — 0.20	1.55	18.60
15	24	1.55 — 0.20	1.75	42.00
				352.75
352.75		X 1.21 =		426.83kg

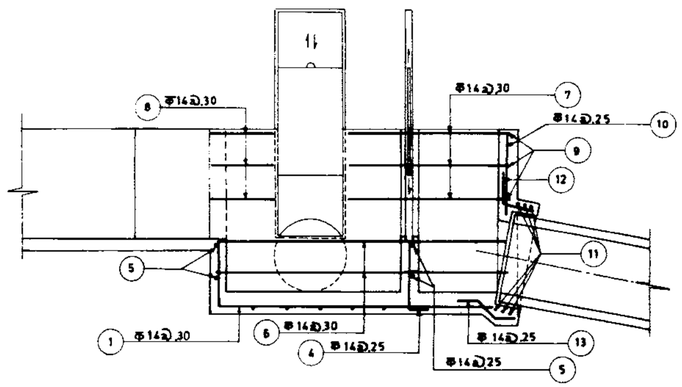

SECTION A-A
Scale 1:40

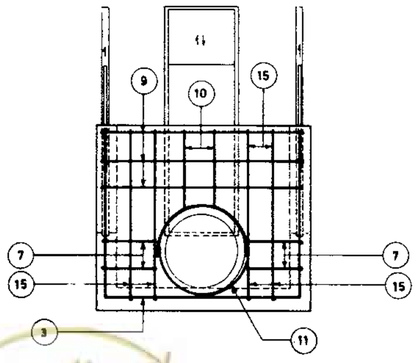

SECTION D-D
Scale 1:40

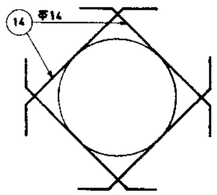

ALL BARS ARE Φ14 (1.21 Kg/m)

REFERENCE DWGS: FOR PLAN & SECTION SEE DWG.Nº 12/7/1/07

Scale: 1:40	IRRIGATION & DRAINAGE STANDARDS		ISLAMIC REPUBLIC OF IRAN
Date:	DWG. Nº 12/7/3/07	DIVISION BOX (TYPE 7) REINFORCEMENT	MINISTRY OF PLAN & BUDJET
Approved:	Sheet Nº 16 of 18	Rev.Nº	TECHNICAL RESEARCH AND STANDARD BUREAU

omoorepeyman.ir

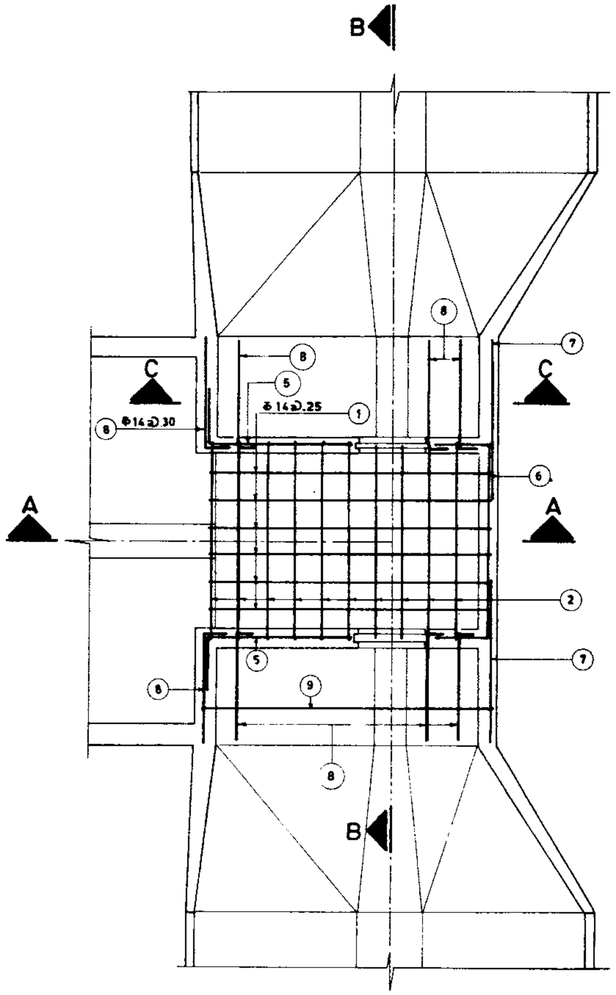

PLAN
Scale. 1:40

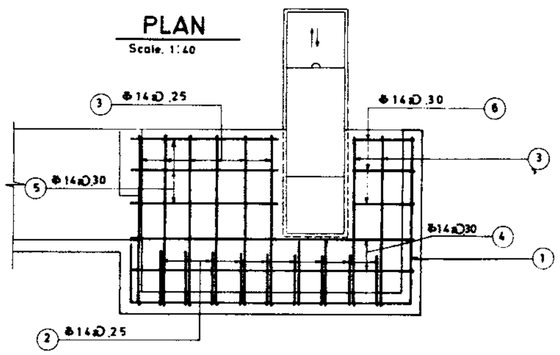

SECTION A-A
Scale. 1:40

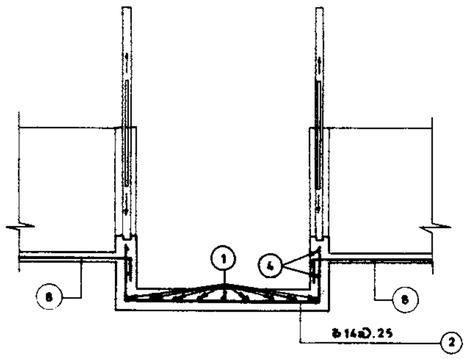

SECTION B_B
Scale: 1:40

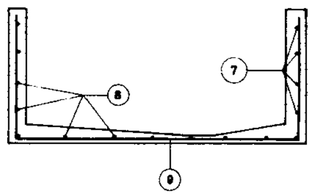

SECTION C-C
Scale. 1:40

POS	Nº	Form	UNIT LENG.	TOTAL LENG.
1	9	0.55 — 2.61 — 1.55	4.71	42.39
2	11	0.55 — 1.81 — 0.55	2.91	32.01
3	18	1.45	1.45	26.10
4	2	1.78 — 0.50 — 2.58 / 2.58 — 1.78	9.22	18.44
5	8	0.50 — 1.40	1.90	15.20
6	4	0.56 — 1.78 — 0.56	2.90	11.60
7	8	1.50	1.50	12.00
8	26	0.20 — 1.00	1.20	31.20
9	6	2.61 — 1.15	4.91	29.46
				218.40
218.40		X 1.21 =		264.26 kg

ALL BARS ARE Φ 14 (1.21 Kg/m)

REFERENCE DWGS: FOR PLAN & SECTION SEE DWG.Nº 12/7/1/08

Scale. 1:40	IRRIGATION & DRAINAGE STANDARDS	
Date:	DWG. Nº 12/7/3/08	DIVISION BOX (TYPE 8) REINFORCEMENT
Approved:	Sheet Nº 17 of 18 Rev. Nº	

ISLAMIC REPUBLIC OF IRAN
MINISTRY OF PLAN & BUDJET
TECHNICAL RESEARCH AND STANDARD BUREAU

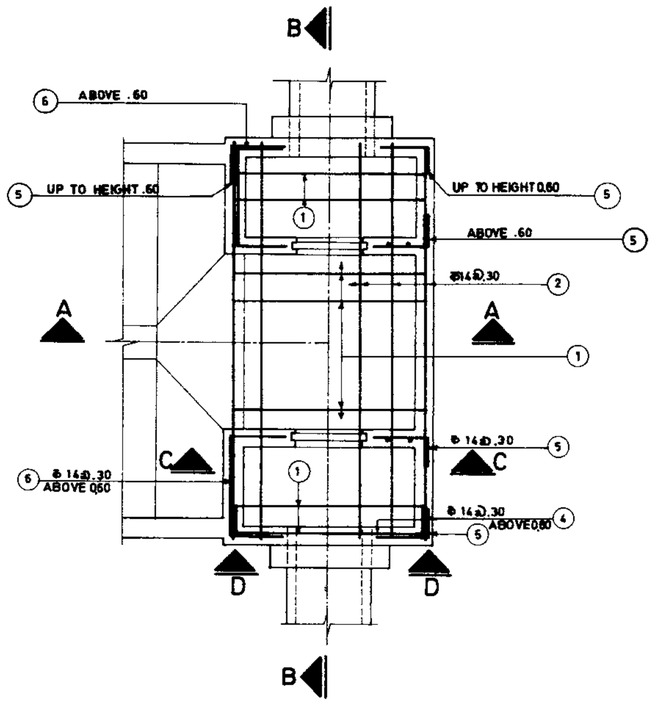

PLAN

Scale. 1:40

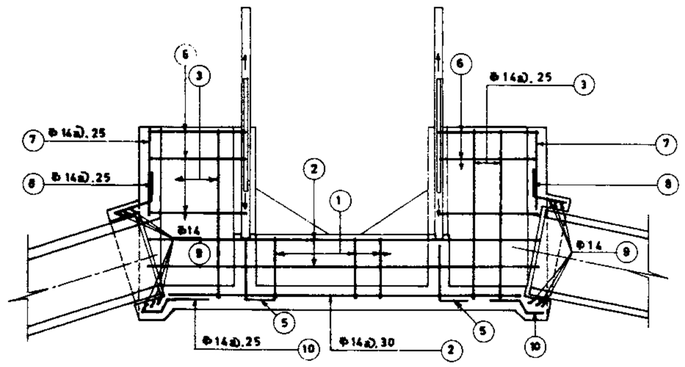

SECTION B-B

Scale. 1:40

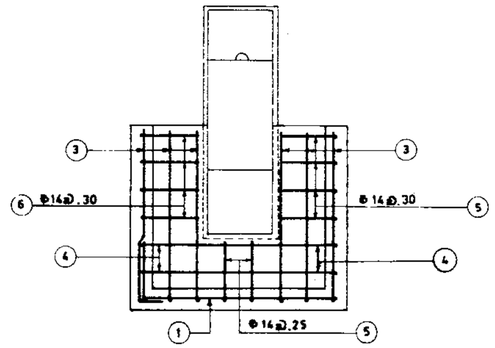

SECTION C-C

Scale. 1:40

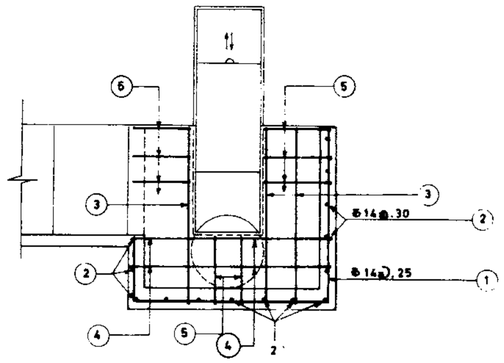

SECTION A-A

Scale 1:40

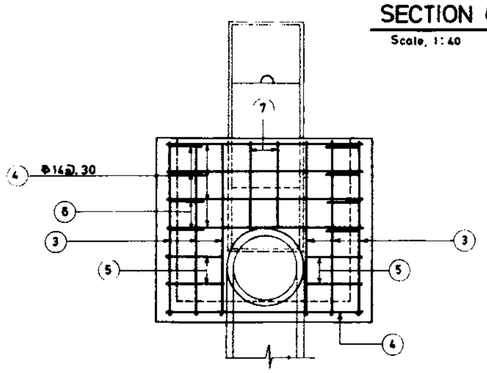

SECTION D-D

Scale 1:40

POS	Nº	Form	UNIT LENG.	TOTAL LENG.
1	16	0.55 / 1.81 / 1.55	3.91	62.56
2	15	3.58	3.58	53.78
3	24	1.55 / 0.20	1.75	42.00
4	12	0.51 / 1.78 / 0.51	2.80	33.60
5	20	0.45 / 0.25	0.70	14.00
6	8	0.45 / 0.80 / 0.45	1.80	14.40
7	4	0.70	0.70	2.80
8	16	0.40 / 0.30	0.70	11.20
9	6	0.40 / 0.40	3.79	22.74
10	8	0.75	0.75	6.00
11	8	0.20 / 1.15 / 0.20	1.55	12.40
				275.48
275.48		x 1.21 =		333.33 kg

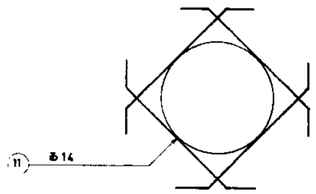

ALL BARS ARE Φ14 (1.21 Kg/m)

REFERENCE DWGS: FOR PLAN & SECTION SEE DWG.Nº 12/7/1/09

Scale: 1:40	IRRIGATION & DRAINAGE STANDARDS		ISLAMIC REPUBLIC OF IRAN
Date:	DWG. Nº 12/7/3/09	DIVISION BOX (TYPE 9) REINFORCEMENT	MINISTRY OF PLAN & BUDJ:
Approved.	Sheet Nº 18 of 18	Rev Nº	TECHNICAL RESEARCH AND STANDARD BUREAU

omoorepeyman.ir

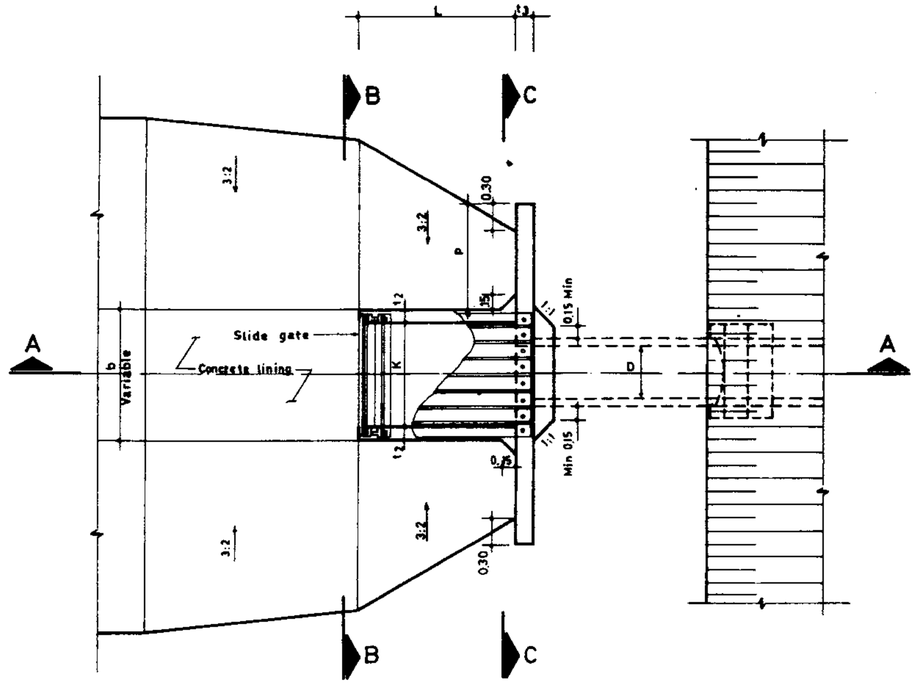

PLAN
SCALE 1:50

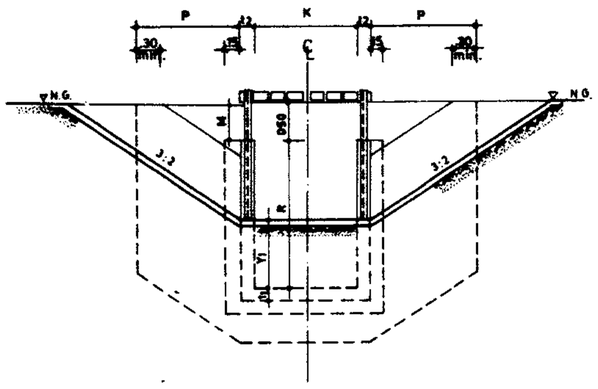

SECTION B_B
SCALE 1:50

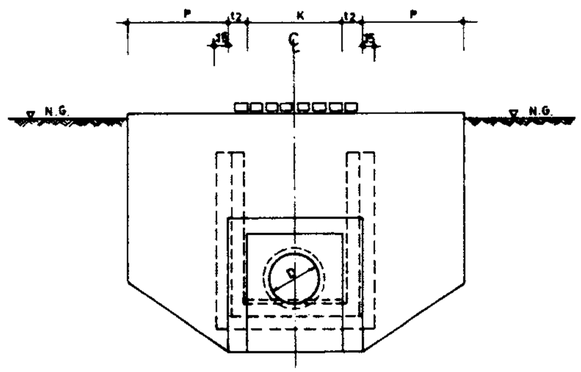

SECTION D_D
SCALE 1:50

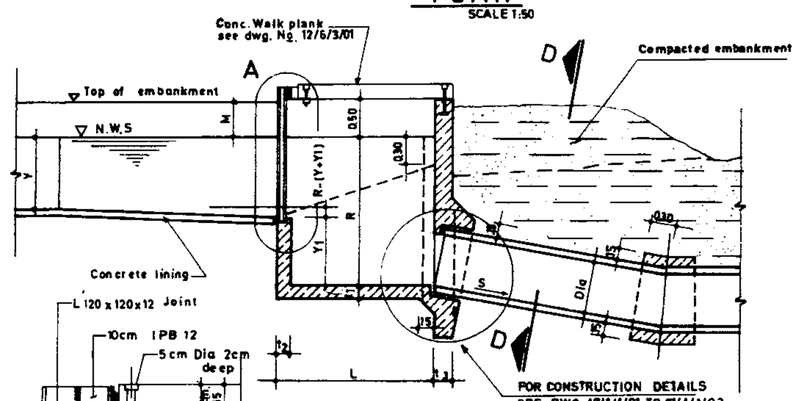

SECTION A_A
SCALE 1:50

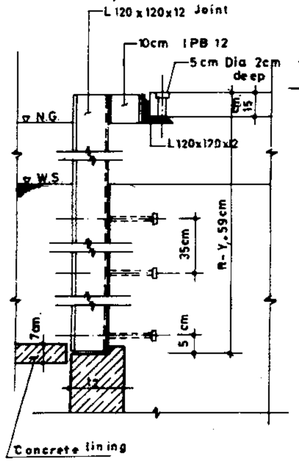

DETAIL A
SCALE 1:15

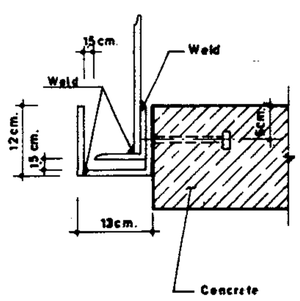

SLIDE GATE ASSEMBLY

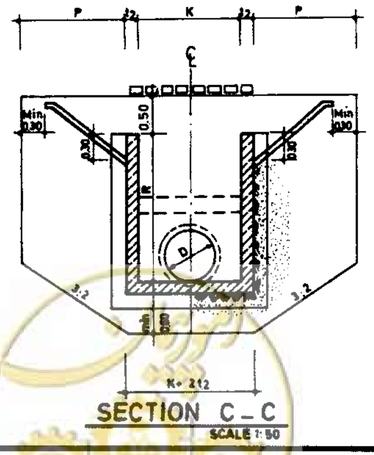

SECTION C_C
SCALE 1:50

STRUCTURE PURPOSE

The purpose of a check and pipe inlet is to maintain a water surface at a required elevation for turnout deliveries upstream with partial flows in the canal.

PIPE SELECTION

The criteria for determining a pipe size for a structure having a check and pipe inlet is based on providing a pipe with an adequate diameter so that the velocity in the pipe will not exceed the following:

1_ 1.0 m per second for a pipe drop having only an earth transition at the outlet.
2_ 1.5 m per second for a road crossing or a similar structure such as a short inverted siphon having a concrete outlet transition.
3_ 3.0 m per second for a relatively long inverted siphon having a concrete outlet transition.
4_ 3.5 m per second for a pipe drop having a baffled outlet or stilling pool outlet.

DESIGN PROCEDURE :

1_ Determine pipe size from Dwg. N° 11/6/1/02
2_ Select structure number from the Dimension Table Dwg N° 12/6/1/02
3_ Determine :
   a) Standard check and pipe inlet dimension K R Y_1 and L from the Dimension Table.
   b) Pipe velocity head for selected pipe diameter from equation $h_{vp} = \frac{V_p^2}{2g}$
   c) Determine elevation D :
      El. D = NWS El. at Sta. A-R
      NWS El. at Sta. A = El. A + Y
      Y is normal depth at Sta A
   d) Drop and slope in transition :
      Drop = R - (Y+Y_1)
      Slope = Length of transition to drop that in earth transition must be flatter than 4 to 1.
4_ Select gate size
   e) Determine normal canal free board that is equal to El. canal bank_El NWS in canal.
   f) For extrem condition, when the gate is closed, canal bank free board must be adequate for the normal flow over flowing from the sidewalls and gate closure.
   g) Check when gate is closed being at a higher elevation than the sidewalls.

REFERENCE DWGS: For general notes see dwgs. N°. 20/2/1/01 TO 20/2/1/03
For reinforcement see dwg. N°. 12/6/3/01
For operating platform see dwg. N° 12/6/3/01

Scale: 1:50 1:15	IRRIGATION DRAINAGE STANDARDS		ISLAMIC REPUBLIC OF IRAN
Date:	DWG. N° 12/6/1/01	Pipe inlet with check structure (Conc. canal) Plan & Section	MINISTRY OF PLAN & BUDJE
Approved:	Sheet N° 1 of 6	Rev N°	TECHNICAL RESEARCH AND STANDARD BUREAU

omoorepeyman.ir

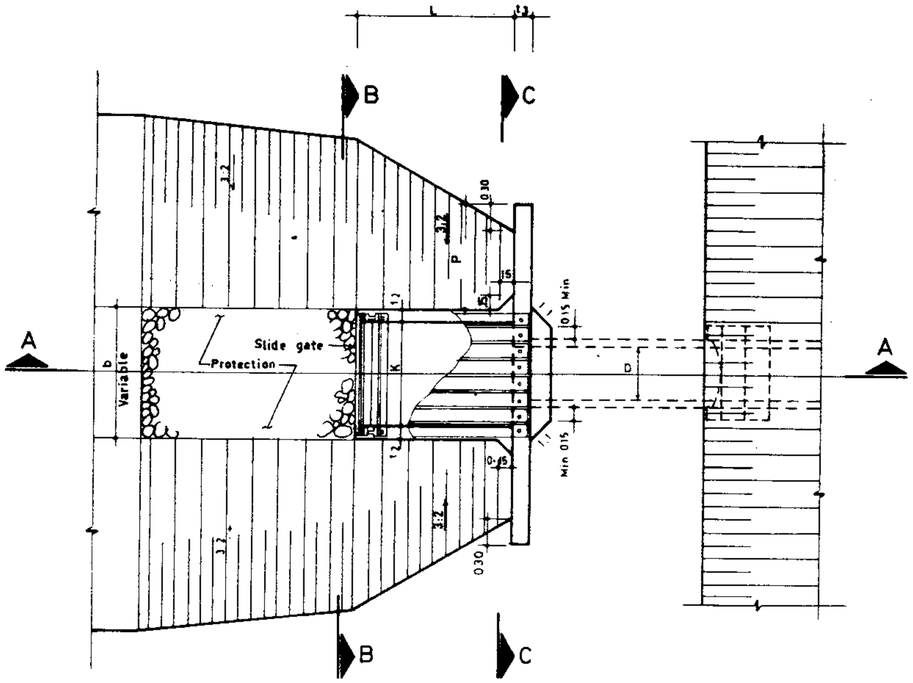

PLAN
SCALE 1:50

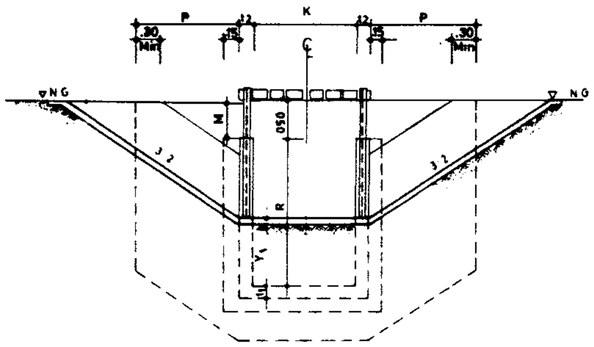

SECTION B_B
SCALE 1:50

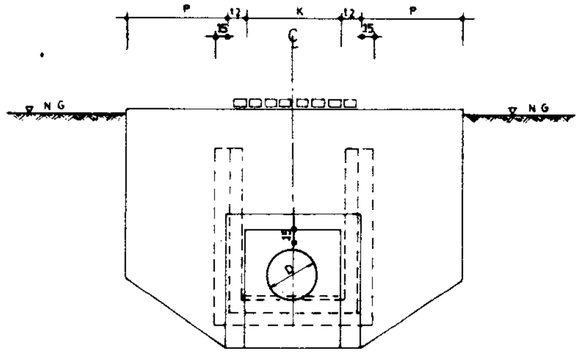

SECTION D_D
SCALE 1:50

DIMENSION TABLE

STR.#	Dia. m.	K m.	R m.	L m.	Y_1 m.	M m.	P m.	t_1	t_2	t_3	R/Bar. Kg.	CONC. m^3	FORM. m^2
300_1	0.300	0.60	0.80	1.10	0.40	0.30	1.20	0.15	0.15	0.15	151.18	1.30	16.55
300_2	0.300	0.80	1.50	1.40	0.90	0.30	1.20	0.15	0.15	0.15	231.65	2.33	29.00
400_1	0.400	0.70	0.80	1.10	0.40	0.30	1.20	0.15	0.15	0.15	155.67	1.34	16.91
400_2	0.400	0.90	1.50	1.40	0.90	0.30	1.20	0.15	0.15	0.15	245.75	2.40	29.52
450_1	0.450	0.70	0.85	1.10	0.40	0.30	1.20	0.15	0.15	0.15	164.00	1.47	17.47
450_2	0.450	0.90	1.55	1.40	0.90	0.30	1.20	0.18	0.15	0.15	250.57	2.48	30.34
500_1	0.500	0.90	0.90	1.25	0.40	0.30	1.20	0.15	0.15	0.15	188.94	1.61	19.62
500_2	0.500	1.10	1.60	1.70	0.90	0.30	1.20	0.18	0.15	0.20	306.72	3.38	34.76
600_1	0.600	0.90	1.00	1.25	0.40	0.30	1.20	0.15	0.15	0.15	187.02	1.69	20.77
600_2	0.600	1.20	1.70	1.85	0.80	0.30	1.20	0.18	0.15	0.20	320.70	3.65	37.70
700_1	0.700	1.10	1.10	1.40	0.40	0.40	1.30	0.15	0.15	0.15	235.55	2.01	24.62
700_2	0.700	1.50	1.80	2.00	0.80	0.40	1.30	0.18	0.15	0.20	268.77	4.35	43.76
800_1	0.800	1.20	1.20	1.40	0.40	0.45	1.45	0.15	0.15	0.15	242.04	2.22	27.27
800_2	0.800	1.80	1.90	2.15	0.80	0.45	1.45	0.18	0.15	0.20	454.02	5.12	50.15
900_1	0.900	1.50	1.30	1.55	0.40	0.45	1.45	0.15	0.15	0.15	306.24	2.62	31.30
900_2	0.900	1.80	2.00	2.30	0.70	0.45	1.45	0.18	0.18	0.20	508.53	5.73	53.57
1000_1	1.000	1.50	1.40	1.70	0.40	0.45	1.45	0.15	0.15	0.15	326.80	2.80	33.58
1000_2	1.000	2.10	2.10	2.60	0.60	0.45	1.45	0.18	0.18	0.20	571.17	6.52	59.29
1200_1	1.200	1.70	1.60	2.00	0.40	0.45	1.45	0.18	0.15	0.20	389.43	3.98	40.39
1400_1	1.400	1.90	1.80	2.15	0.40	0.45	1.45	0.18	0.15	0.20	452.27	4.55	45.60
1600_1	1.600	2.00	2.00	2.30	0.40	0.45	1.45	0.18	0.18	0.20	521.30	5.40	51.21

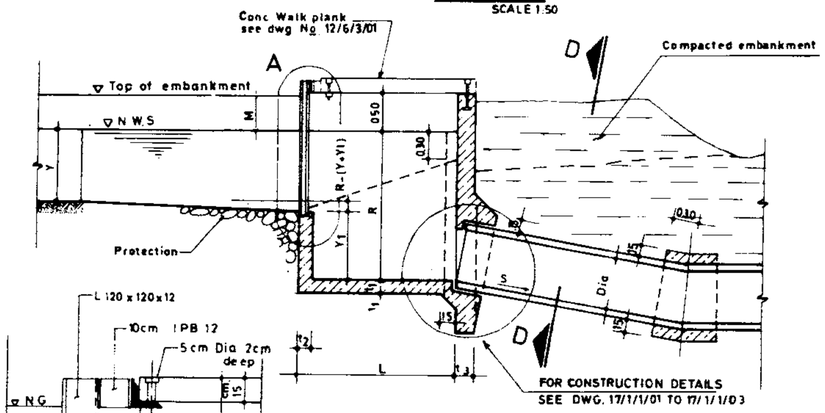

SECTION A_A
SCALE 1:50

DETAIL A
SCALE 1:15

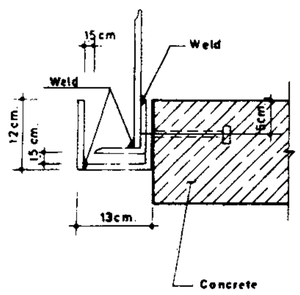

SLIDE GATE ASSEMBLY

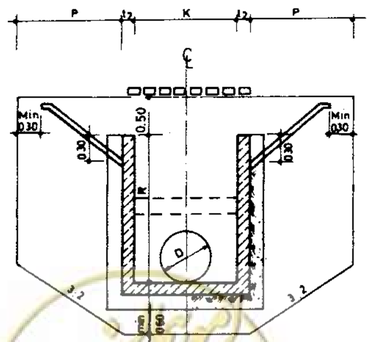

SECTION C_C
SCALE 1:50

NOTES

Structures are numbered to designate pipe diameter in milimeters followed by a second number -1 or -2 which designate maximum allowable pipe velocities of 1.5 and 3.5 meter per second respectively.

Structures -1 and -2 may also be used for maximum allowable pipe velocities of 1.00 and 3.00 meter per second respectively:

Structure number 600_2 is for a 600 mm diameter pipe having a maximum allowable velocity of either 3.0 or 3.5 meter per second.

REFERENCE DWGS.
For general notes see dwgs. Nº. 20/2/1/01 TO 20/2/1/03
For reinforcement see dwg. Nº. 12/6/3/01
For operating platform see dwg. Nº. 12/6/3/01
For protection see dwg. Nº 13/3/1/01 & 13/4/1/01

Scale: 1:50 1:15	IRRIGATION DRAINAGE STANDARDS		
Date:	DWG.Nº 12/6/1/02		Pipe inlet with check structure (Earth canal) PLAN & SECTION
Approved:	Sheet Nº 2 of 6	Rev. Nº.	

ISLAMIC REPUBLIC OF IRAN
MINISTRY OF PLAN & BUDJE
TECHNICAL RESEARCH AND STANDARD BUREAU

omoorepeyman.ir

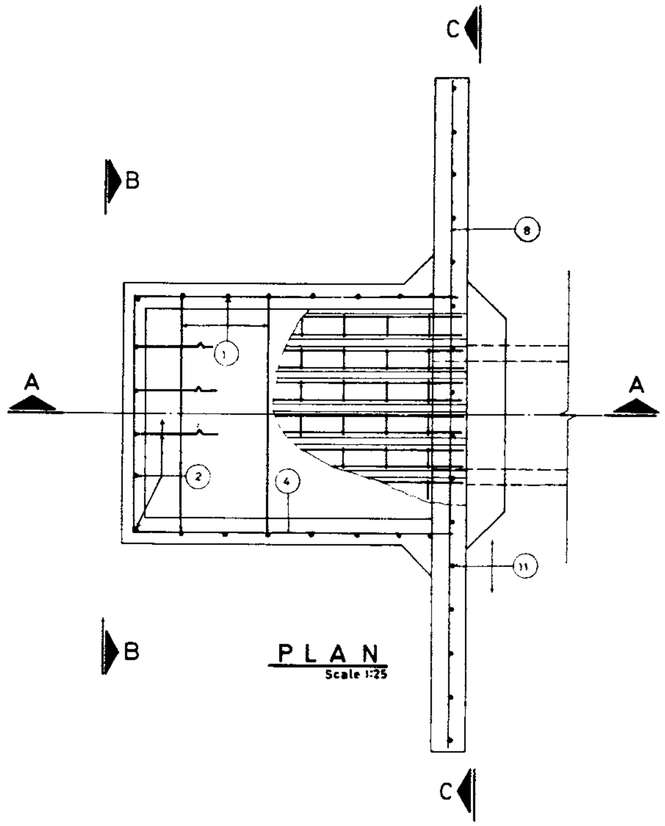

PLAN
Scale 1:25

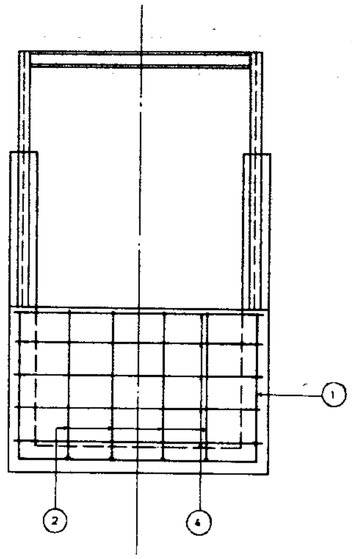

SECTION B_B
Scale 1:25

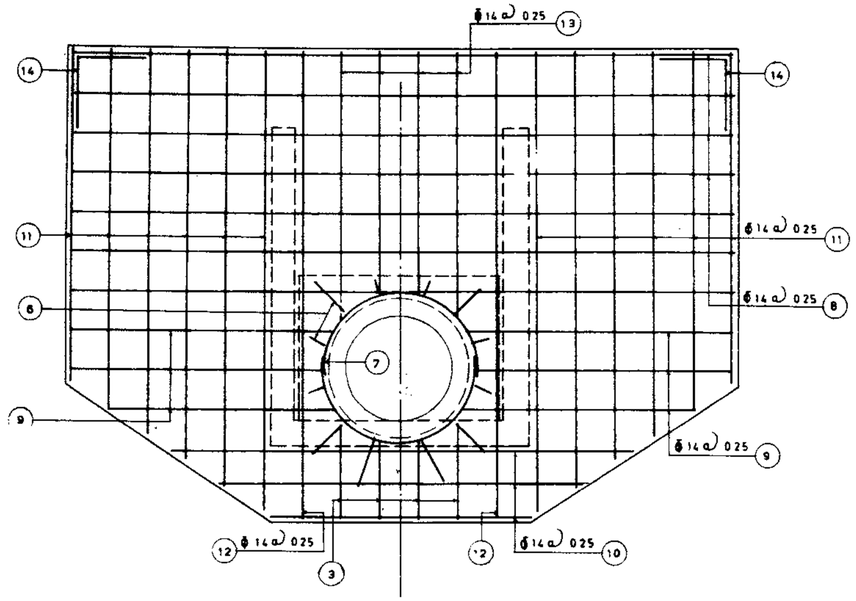

SECTION C_C
Scale 1:25

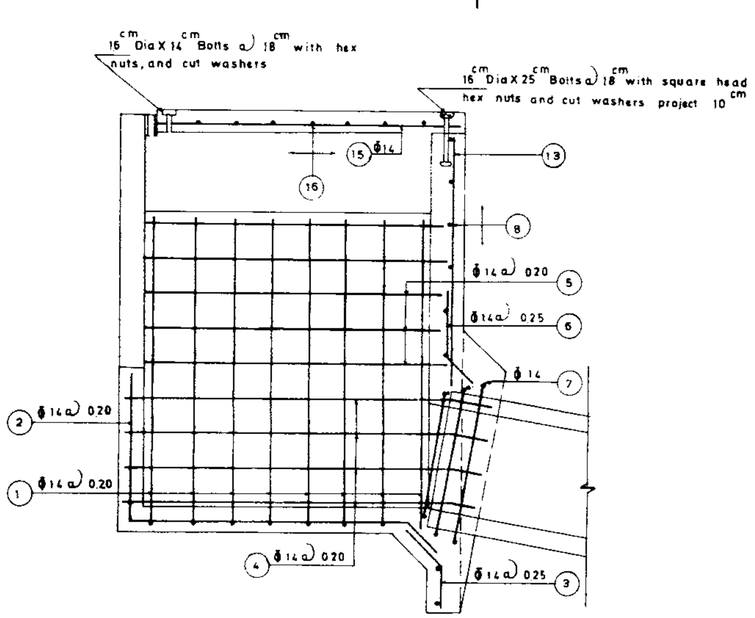

SECTION A_A
Scale 1:25

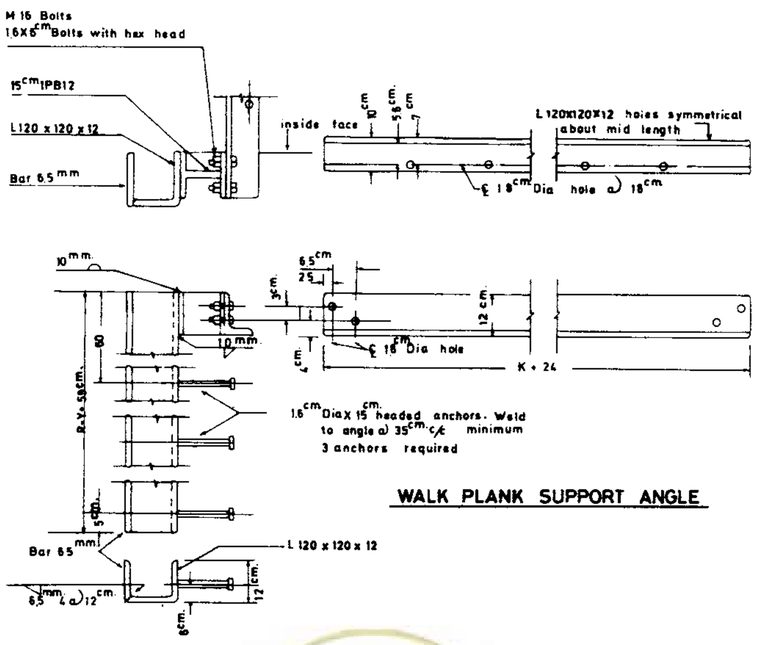

GATE FRAME GUIDE

WALK PLANK SUPPORT ANGLE

OPERATING PLATFORM
Scale 1:10

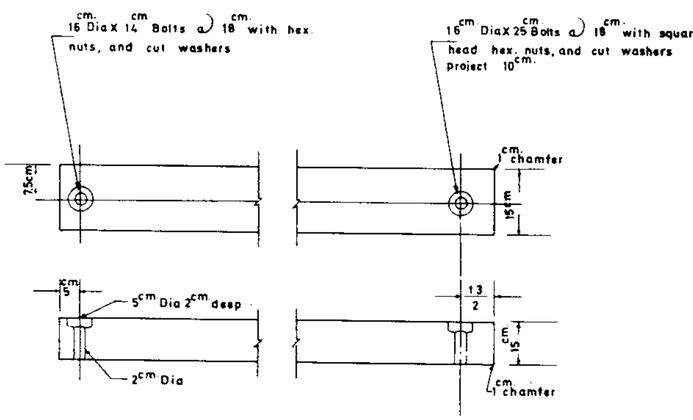

PRECAST CONCRETE WALK PLANK
Scale 1:10

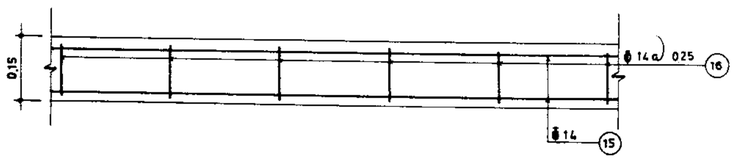

PRECAST MEMBERS FOR SIDEWALK

REFERENCE DWGS: For general notes see dwgs.№ 20/2/1/01 TO 20/2/1/03
For reinforcement tables see dwgs. №. 12/6/3/02 TO 12/6/3/04

Scale: 1:25_1:10	IRRIGATION & DRAINAGE STANDARDS		ISLAMIC REPUBLIC OF IRAN
Date:	DWG.№. 12/6/3/01	PIPE INLET WITH CHECK STRUCTURE REINFORCEMENT PLAN & SECTION	MINISTRY OF PLAN & BUDJE
Approved:	Sheet №. 3 of 6	Rev.№.	TECHNICAL RESEARCH AND STANDARD BUREAU

omoorepeyman.ir

STR.300-1

Pos	No.	FORM	UNIT LENG.	TOTAL LENG.
1	6	0.87 | 0.82 | 0.87	2.56	15.36
2	6	0.32 | 1.06 | 0.15	1.53	9.18
3	5	0.30 | 0.40	0.70	3.50
4	4	0.82 | 1.17 | 1.17 | 0.40 | 0.40	3.96	15.84
5	4	0.20 | 1.17 | 0.40	1.77	7.08
6	7	0.30 | 0.60	0.90	6.30
7	3	0.40 ○ 0.40	2.62	7.86
8	5	3.22	3.22	16.10
9	2	1.35 ~ 1.57	1.46	2.92
10	3	0.82 ~ 2.41	1.62	4.86
11	12	1.02 ~ 1.82	1.42	17.04
12	4	1.82	1.82	7.28
13	1	0.86 ~ 1.10	0.98	0.98
14	2	0.50 | 0.50	1.00	2.00
15	4x2	0.88	0.88	7.04
16	4x4	0.10	0.10	1.60
				124.94

124.94 x 1.21 = 151.18 Kg

STR.300-2

Pos	No.	FORM	UNIT LENG.	TOTAL LENG.
1	7	1.57 | 1.07 | 1.57	4.16	29.12
2	4	0.82 | 1.36 | 0.15	2.33	9.32
3	6	0.30 | 0.40	0.70	4.20
4	7	1.02 | 1.47 | 1.47 | 0.40 | 0.40	4.76	33.32
5	6	0.20 | 1.47 | 0.40	2.07	12.42
6	7	0.30 | 0.60	0.90	6.30
7	3	0.40 ○ 0.40	2.62	7.86
8	8	3.42	3.42	27.36
9	2	1.45 ~ 1.67	1.56	3.12
10	3	1.02 ~ 2.61	1.82	5.46
11	12	1.72 ~ 2.52	2.12	25.44
12	4	2.52	2.52	10.08
13	1	1.56 ~ 1.74	1.65	1.65
14	2	0.50 | 0.50	1.00	2.00
15	5x2	1.18	1.18	11.80
16	5x4	0.10	0.10	2.00
				191.45

191.45 x 1.21 = 231.65 kg

STR.400-1

Pos	No.	FORM	UNIT LENG.	TOTAL LENG.
1	6	0.87 | 0.92 | 0.87	2.66	15.96
2	6	0.32 | 1.06 | 0.15	1.53	9.18
3	5	0.30 | 0.40	0.70	3.50
4	4	0.92 | 1.17 | 1.17 | 0.40 | 0.40	4.06	16.24
5	4	0.20 | 1.02 | 0.40	1.62	6.48
6	9	0.30 | 0.60	0.90	8.10
7	3	0.40 ○ 0.40	2.99	8.97
8	4	3.32	3.32	13.28
9	4	1.35 ~ 1.62	1.49	5.96
10	3	0.52 ~ 2.51	1.72	5.16
11	12	1.02 ~ 1.82	1.42	17.04
12	4	1.82	1.82	7.26
13	1	0.76 ~ 0.99	0.88	0.88
14	2	0.50 | 0.50	1.00	2.00
15	4x2	0.88	0.88	7.04
16	4x4	0.10	0.10	1.60
				128.65

128.65 x 1.21 = 155.67 Kg

STR.400-2

Pos	No.	FORM	UNIT LENG.	TOTAL LENG.
1	7	1.57 | 1.12 | 1.57	4.26	29.82
2	7	0.82 | 1.36 | 0.15	2.33	16.31
3	6	0.30 | 0.40	0.70	4.20
4	7	1.12 | 1.47 | 1.47 | 0.20 | 0.20	4.86	34.02
5	6	0.20 | 1.32 | 0.40	1.92	11.52
6	9	0.30 | 0.60	0.90	8.10
7	3	0.40 ○ 0.40	2.99	8.97
8	7	3.52	3.52	24.64
9	4	1.45 ~ 1.72	1.59	6.36
10	3	2.71 ~ 3.12	1.92	5.76
11	12	2.52 ~ 1.72	2.12	25.44
12	4	2.52	2.52	10.08
13	1	1.46 ~ 1.69	1.58	1.58
14	2	0.50 | 0.50	1.00	2.00
15	5x2	1.18	1.18	11.80
16	5x5	0.10	0.10	2.50
				203.10

203.10 x 1.21 = 245.75 Kg

STR.450-1

Pos	No.	FORM	UNIT LENG.	TOTAL LENG.
1	6	0.92 | 0.92 | 0.92	2.76	16.56
2	6	0.32 | 1.36 | 0.15	1.53	9.18
3	5	0.30 | 0.40	0.70	3.50
4	4	0.92 | 1.17 | 1.17 | 0.40 | 0.40	4.06	16.24
5	6	0.20 | 1.02 | 0.40	1.62	9.72
6	10	0.30 | 0.60	0.90	9.00
7	3	0.40 ○ 0.40	3.10	9.30
8	4	3.32	3.32	13.28
9	4	1.41 ~ 1.52	1.52	6.08
10	3	0.52 ~ 2.51	1.72	5.16
11	12	1.07 ~ 1.87	1.47	17.64
12	4	1.87	1.87	7.48
13	2	0.75 ~ 1.01	0.88	1.76
14	2	0.50 | 0.50	1.00	2.00
15	4x2	0.88	0.88	7.04
16	4x4	0.10	0.10	1.60
				135.54

135.54 x 1.21 = 164.00 Kg

ALL BARS ARE Φ 14 (1.21 kg/m)

REFERENCE DWGS: For reinforcement see dwg. No. 12/6/3/01
For bars with variable unit length see note under the same title at dwg. No. 20/2/1/01

Scale:	IRRIGATION & DRAINAGE STANDARDS		
Date:	DWG.No. 12/6/3/02	PIPE INLET WITH CHECK STRUCTURE	
Approved:	Sheet No.4 of 6	Rev.No.	LIST OF REINFORCEMENT STR.1 TO 5

ISLAMIC REPUBLIC OF IRAN
MINISTRY OF PLAN & BUDJET
TECHNICAL RESEARCH AND STANDARD BUREAU

omoorepeyman.ir

STR.450_2

Pos	No.	FORM	UNIT LENG.	TOTAL LENG.
1	7	1.62 / 1.12 / 1.62	4.36	30.52
2	4	0.82 / 1.36 / 0.15	2.33	9.32
3	6	0.30 / 0.40 / 0.40	0.70	4.20
4	7	1.12 / 1.47 / 1.47 / 0.40	4.86	34.02
5	8	0.20 / 1.32 / 0.40	1.92	15.36
6	10	0.30 / 0.60	0.90	9.00
7	3	0.40 / 0.40	3.10	9.30
8	7	3.52	3.52	24.64
9	4	1.43 ~ 1.72	1.58	6.32
10	3	1.12 ~ 2.71	1.92	5.76
11	12	1.77 ~ 2.57	2.17	26.04
12	4	2.57	2.57	10.28
13	2	1.45 ~ 1.71	1.58	3.16
14	2	0.50 / 0.50	1.00	2.00
15	6x2	1.18	1.18	14.16
16	6x5	0.10	0.10	3.00
				207.08

207.08 x 1.21 = 250.57 Kg

STR.500_1

Pos	No.	FORM	UNIT LENG.	TOTAL LENG.
1	7	0.97 / 1.21 / 0.97	3.06	21.42
2	7	0.32 / 1.21 / 0.15	1.68	11.76
3	6	0.30 / 0.40 / 0.40	0.70	4.20
4	4	1.12 / 1.32 / 1.32 / 0.40	4.56	18.24
5	6	0.20 / 1.12 / 0.40	1.72	10.32
6	10	0.30 / 0.60	0.90	9.00
7	3	0.40 / 0.40	3.35	10.05
8	4	3.52	3.52	14.08
9	4	1.4 ~ 1.72	1.56	6.24
10	3	1.12 ~ 2.71	1.92	5.76
11	12	1.12 ~ 1.92	1.52	18.24
12	4	1.92	1.92	7.68
13	2	3.75 ~ 1.04	0.90	1.80
14	2	0.50 / 0.50	1.00	2.00
15	6x2	1.03	1.03	12.36
16	6x5	0.10	0.10	3.00
				156.15

156.15 x 1.21 = 188.94 Kg

STR.500_2

Pos	No.	FORM	UNIT LENG.	TOTAL LENG.
1	9	1.67 / 1.32 / 1.67	4.66	41.94
2	8	0.82 / 1.66 / 0.20	2.68	21.44
3	7	0.30 / 0.40 / 0.40	0.70	4.90
4	7	1.32 / 1.82 / 1.82 / 0.40	5.76	40.32
5	8	0.20 / 1.12 / 0.40	2.27	18.16
6	10	0.30 / 0.60	0.90	9.00
7	3	0.40 / 0.40	3.35	10.05
8	7	3.72	3.72	26.04
9	4	1.50 ~ 1.82	1.66	6.64
10	3	1.32 ~ 2.91	2.12	6.36
11	12	1.82 ~ 2.62	2.22	26.64
12	4	2.62	2.62	10.48
13	2	1.45 ~ 1.74	1.60	3.20
14	2	0.50 / 0.50	1.00	2.00
15	7x2	1.53	1.53	21.42
16	7x7	0.10	0.10	4.90
				253.49

253.49 x 1.21 = 306.72 Kg

STR.600_1

Pos	No.	FORM	UNIT LENG.	TOTAL LENG.
1	7	1.07 / 1.12 / 1.07	3.26	22.82
2	7	0.32 / 1.21 / 0.15	1.68	11.76
3	6	0.30 / 0.40 / 0.40	0.70	4.20
4	4	1.12 / 1.32 / 1.32 / 0.40	4.56	18.24
5	6	0.20 / 1.17 / 0.40	1.77	10.62
6	12	0.30 / 0.60	0.90	10.80
7	3	0.40 / 0.40	3.79	11.37
8	4	2.62	2.62	10.48
9	4	1.34 ~ 1.72	1.53	6.12
10	3	1.12 ~ 2.71	1.92	5.76
11	12	1.22 ~ 2.02	1.62	19.44
12	2	2.02	2.02	4.04
13	2	0.75 ~ 1.09	0.92	1.84
14	2	0.50 / 0.50	1.00	2.00
15	6x2	1.03	1.03	12.36
16	6x5	0.10	0.10	3.00
				154.56

154.56 x 1.21 = 187.02 Kg

STR.600_2

Pos	No.	FORM	UNIT LENG.	TOTAL LENG.
1	10	1.77 / 1.42 / 1.77	4.96	49.60
2	9	0.72 / 1.81 / 0.20	2.73	24.57
3	7	0.30 / 0.40 / 0.40	0.70	4.90
4	6	1.42 / 1.97 / 1.97 / 0.40	6.16	36.96
5	10	0.20 / 1.82 / 0.40	2.42	24.20
6	13	0.30 / 0.60	0.90	11.70
7	3	0.40 / 0.40	3.79	11.37
8	4	3.82	3.82	15.28
9	4	1.49 ~ 1.87	1.68	6.72
10	3	1.42 ~ 3.01	2.22	6.66
11	12	1.92 ~ 2.72	2.32	27.84
12	4	2.72	2.72	10.88
13	2	1.45 ~ 2.79	1.62	3.24
14	2	0.50 / 0.50	1.00	2.00
15	7x2	1.68	1.68	23.52
16	7x8	0.10	0.10	5.60
				265.04

265.04 x 1.21 = 320.70 Kg

ALL BARS ARE Φ 14 (1.21 kg/m)

STR.700_1

Pos	No.	FORM	UNIT LENG.	TOTAL LENG.
1	7	1.17 / 1.32 / 1.17	3.66	25.62
2	8	0.32 / 1.36 / 0.15	1.83	14.64
3	7	0.30 / 0.40 / 0.40	0.70	4.90
4	4	1.32 / 1.47 / 1.47 / 0.40	5.06	20.24
5	10	0.20 / 1.32 / 0.40	1.92	19.20
6	13	0.30 / 0.60	0.90	11.70
7	3	0.40 / 0.40	4.30	12.90
8	4	3.92	3.92	15.68
9	6	1.47 ~ 1.92	1.70	10.20
10	3	1.32 ~ 2.82	2.07	6.21
11	14	1.25 ~ 2.12	1.69	23.66
12	2	2.12	2.12	4.24
13	3	0.72 ~ 1.12	0.92	2.76
14	2	0.50 / 0.50	1.00	2.00
15	7x2	1.18	1.18	16.52
16	7x6	0.10	0.10	4.20
				194.67

194.67 x 1.21 = 235.55 Kg

STR.700_2

Pos	No.	FORM	UNIT LENG.	TOTAL
1	10	1.87 / 1.72 / 1.87	5.46	54.60
2	10	0.72 / 1.96 / 0.20	2.88	28.80
3	9	0.30 / 0.40 / 0.40	0.70	6.30
4	6	1.72 / 2.12 / 2.12 / 0.40	6.76	40.56
5	10	0.20 / 1.97 / 0.40	2.57	25.70
6	13	0.30 / 0.60	0.90	11.70
7	3	0.40 / 0.40	4.30	12.90
8	7	2.82	2.82	19.74
9	6	1.67 ~ 2.12	1.90	11.40
10	3	1.72 ~ 3.22	2.47	7.41
11	14	1.82 ~ 1.95	1.89	26.45
12	4	2.82	2.82	11.28
13	3	1.42 ~ 1.82	1.62	4.86
14	2	0.50 / 0.50	1.00	2.00
15	9x2	1.83	1.83	32.94
16	9x9	0.10	0.10	8.10
				304.77

304.77 x 1.21 = 268.77 Kg

STR.800_1

Pos	No	FORM	UNIT LENG.	TOTAL LENG.
1	7	1.27 / 1.42 / 1.27	3.96	27.72
2	9	0.32 / 1.36 / 0.15	1.83	16.47
3	7	0.30 / 0.40 / 0.40	0.70	4.90
4	4	1.42 / 1.47 / 1.47 / 0.40	5.19	20.64
5	7	0.20 / 1.32 / 0.40	1.92	13.44
6	15	0.30 / 0.60	0.90	13.50
7	3	0.40 / 0.40	4.66	13.98
8	4	4.32	4.32	17.28
9	6	1.52 ~ 2.12	1.87	11.22
10	3	1.42 ~ 2.92	2.17	6.51
11	14	1.25 ~ 2.22	1.74	24.36
12	2	2.22	2.22	4.44
13	3	2.72 ~ 1.17	0.95	2.85
14	2	0.50 / 0.50	1.00	2.00
15	7x2	1.18	1.18	16.52
16	7x6	0.10	0.10	4.20
				200.03

200.03 x 1.21 = 242.04 Kg

REFERENCE DWGS: For reinforcement see dwg. No. 12/6/3/01

For bars with variable unit length see note under the same title at dwg. No. 20/2/1/01

Scale:	IRRIGATION & DRAINAGE STANDARDS		ISLAMIC REPUBLIC OF IRAN
Date:	DWG.No. 12/6/3/03	PIPE INLET WITH CHECK STRUCTURE	MINISTRY OF PLAN & BUDJET
Approved:	Sheet No. 5 of 6 / Rev.No.	LIST OF REINFORCEMENT STR. 6 TO 13	TECHNICAL RESEARCH AND STANDARD BUREAU

omoorepeyman.ir

STR.800_2

Pos	No.	FORM	UNIT LENG.	TOTAL LENG.
1	11	1.97 | 2.02 | 1.97	5.96	65.56
2	12	0.72 | 2.11 | 0.20	3.03	36.36
3	10	0.30 | 0.40	0.70	7.00
4	6	2.02 | 2.27 | 2.27 | 0.40 | 0.40	7.36	44.16
5	12	0.20 | 2.12 | 0.40	2.72	32.64
6	15	0.30 | 0.60	0.90	13.50
7	3	0.40 ○ 0.40	4.66	13.98
8	7	4.92	4.92	34.44
9	6	1.92 ~ 2.42	2.17	13.02
10	3	2.02 ~ 3.52	2.77	8.31
11	14	1.95 ~ 2.92	2.44	34.16
12	4	2.92	2.92	11.68
13	3	1.42 ~ 1.87	1.65	4.95
14	2	0.50 | 0.50	1.00	2.00
15	11x2	1.98	1.98	43.56
16	11x9	0.10	0.10	9.90
				375.22

375.22 x 1.21 = 454.02 Kg

STR.900_2

Pos	No.	FORM	UNIT LENG.	TOTAL LENG.
1	8	1.37 | 1.72 | 1.37	4.46	35.68
2	10	0.32 | 1.51 | 0.15	1.98	19.80
3	9	0.30 | 0.40	0.70	6.30
4	4	1.72 | 1.62 | 1.62 | 0.40 | 0.40	5.76	23.04
5	10	0.20 | 1.47 | 0.40	2.07	20.70
6	16	0.30 | 0.60	0.90	14.40
7	4	0.40 ○ 0.40	5.03	20.12
8	4	4.62	4.62	18.48
9	8	1.72 ~ 2.27	2.00	16.00
10	3	1.72 ~ 3.22	2.47	7.41
11	14	1.35 ~ 2.32	1.84	25.76
12	4	2.32	2.32	9.28
13	4	0.72 ~ 1.22	0.97	3.88
14	2	0.50 | 0.50	1.00	2.00
15	9x2	1.33	1.33	23.94
16	9x7	0.10	0.10	6.30
				253.09

253.09 x 1.21 = 306.24 Kg

STR.900_2

Pos	No.	FORM	UNIT LENG.	TOTAL LENG.
1	12	2.10 | 2.08 | 2.10	6.28	75.36
2	12	0.62 | 2.26 | 0.20	3.08	36.96
3	10	0.30 | 0.40	0.70	7.00
4	6	2.08 | 2.42 | 2.42 | 0.40 | 0.40	7.72	46.32
5	14	0.20 | 2.24 | 0.40	2.84	39.76
6	16	0.30 | 0.60	0.90	14.40
7	4	0.40 ○ 0.40	5.03	20.12
8	7	4.98	4.98	34.86
9	8	1.90 ~ 2.45	2.18	17.44
10	3	2.08 ~ 3.58	2.83	8.49
11	14	2.05 ~ 3.02	2.54	35.56
12	6	3.02	3.02	18.12
13	4	1.42 ~ 1.92	1.67	6.68
14	2	0.50 | 0.50	1.00	2.00
15	11x2	2.10	2.10	46.20
16	11x10	0.10	0.10	11.00
				420.27

420.27 x 1.21 = 508.53 Kg

STR.1000_1

Pos	No.	FORM	UNIT LENG.	TOTAL LENG.
1	9	1.47 | 1.72 | 1.47	4.66	41.94
2	10	0.32 | 1.66 | 0.15	2.13	21.30
3	9	0.30 | 0.40	0.70	6.30
4	4	1.69 | 1.77 | 1.77 | 0.40 | 0.43	6.06	24.24
5	10	0.20 | 1.62 | 0.40	2.22	22.20
6	18	0.30 | 0.60	0.90	16.20
7	4	0.40 ○ 0.40	5.54	22.16
8	4	4.62	4.62	18.48
9	8	1.65 ~ 2.27	1.96	15.68
10	3	1.72 ~ 3.16	2.44	7.32
11	14	1.45 ~ 2.42	1.94	27.16
12	4	2.42	2.42	9.68
13	4	0.70 ~ 1.27	0.99	3.96
14	2	0.50 | 0.50	1.00	2.00
15	9x2	1.48	1.48	25.16
16	9x7	0.10	0.10	6.30
				270.08

270.08 x 1.21 = 326.80 Kg

STR.1000_2

Pos	No.	FORM	UNIT LENG.	TOTAL LENG.
1	13	2.20 | 2.38 | 2.20	6.78	88.14
2	14	0.52 | 2.56 | 0.20	3.28	45.92
3	11	0.30 | 0.40	0.70	7.70
4	5	2.38 | 2.72 | 2.72 | 0.40 | 0.40	8.62	43.10
5	16	0.20 | 2.54 | 0.40	3.14	50.24
6	18	0.30 | 0.60	0.90	16.20
7	4	0.40 ○ 0.40	5.54	22.16
8	7	5.28	5.28	36.96
9	8	1.98 ~ 2.60	2.29	18.32
10	3	2.38 ~ 3.82	3.10	9.30
11	14	2.15 ~ 3.12	2.64	36.96
12	6	3.12	3.12	18.72
13	4	1.40 ~ 1.96	1.68	6.72
14	2	0.50 | 0.50	1.00	2.00
15	12x2	2.40	2.40	57.60
16	12x10	0.10	0.10	12.00
				472.04

472.04 x 1.21 = 571.17 Kg

STR.1200_1

Pos	No.	FORM	UNIT LENG.	TOTAL LENG.
1	10	1.67 | 1.92 | 1.67	5.26	52.60
2	11	0.32 | 1.96 | 0.20	2.48	27.28
3	9	0.30 | 0.40	0.70	6.30
4	4	1.92 | 2.12 | 2.12 | 0.40 | 0.40	6.96	27.84
5	11	0.20 | 1.79 | 0.40	2.57	28.27
6	21	0.30 | 0.60	0.90	18.90
7	4	0.40 ○ 0.40	6.41	25.64
8	4	4.82	4.82	19.28
9	10	1.63 ~ 2.37	2.00	20.00
10	3	1.92 ~ 3.30	2.61	7.83
11	14	1.65 ~ 2.62	2.14	29.96
12	2	2.62	2.62	5.24
13	5	0.68 ~ 1.35	1.02	5.10
14	2	0.50 | 0.50	1.00	2.00
15	10x2	1.83	1.83	36.60
16	10x9	0.10	0.10	9.00
				321.84

321.84 x 1.21 = 389.43 Kg

STR.1400_1

Pos	No.	FORM	UNIT LENG.	TOTAL LENG.
1	11	1.87 | 2.12 | 1.87	5.86	64.46
2	12	0.32 | 2.11 | 0.20	2.63	31.56
3	10	0.30 | 0.40	0.70	7.00
4	4	2.12 | 2.27 | 2.27 | 0.40 | 0.40	7.46	29.84
5	14	0.20 | 2.12 | 0.40	2.72	38.08
6	23	0.30 | 0.60	0.90	20.70
7	4	0.40 ○ 0.40	7.21	28.84
8	4	5.02	5.02	20.08
9	12	1.62 ~ 2.47	2.05	24.60
10	3	2.12 ~ 3.47	2.80	8.40
11	14	1.85 ~ 2.82	2.34	32.76
12	2	2.82	2.82	5.64
13	6	0.67 ~ 1.45	1.06	6.36
14	2	0.50 | 0.50	1.00	2.00
15	11x2	1.98	1.98	43.56
16	11x9	0.10	0.10	9.90
				373.78

373.78 x 1.21 = 452.27 Kg

STR.1600_1

Pos	No.	FORM	UNIT LENG.	TOTAL LENG.
1	12	2.10 | 2.28 | 2.10	6.48	77.76
2	13	0.32 | 2.26 | 0.20	2.78	36.14
3	11	0.30 | 0.40	0.70	7.70
4	4	2.25 | 2.42 | 2.42 | 0.40 | 0.43	7.92	36.14
5	16	0.20 | 2.24 | 0.40	2.84	45.44
6	26	0.30 | 0.60	0.90	23.40
7	4	0.40 ○ 0.40	7.94	31.76
8	4	5.18	5.18	20.72
9	14	1.60 ~ 2.55	2.08	29.12
10	3	2.28 ~ 3.63	2.96	8.88
11	14	2.05 ~ 3.02	2.54	35.56
12	2	3.02	3.02	6.04
13	7	0.67 ~ 1.55	1.11	7.77
14	2	0.50 | 0.50	1.00	2.00
15	12x2	2.10	2.10	50.40
16	12x10	0.10	0.10	12.00
				430.83

430.83 x 1.21 = 521.30 Kg

ALL BARS ARE Φ14
(1.21 kg/m)

REFERENCE DWGS: For reinforcement see dwg. No. 12/6/3/01
For bars with variable unit length see note under the same title at dwg. No 20/2/1/01

Scale:	IRRIGATION & DRAINAGE STANDARDS	
Date:	DWG.No. 12/6/3/04	PIPE INLET WITH CHECK STRUCTURE
Approved:	Sheet No. 6 of 8 Rev.No.	LIST OF REINFORCEMENT STR. 14 TO 21

ISLAMIC REPUBLIC OF IRAN
MINISTRY OF PLAN & BUDJE
TECHNICAL RESEARCH AND STANDARD BUREAU

PROCESS TO SELECT CONTROL NOTCH

A control notch must control discharge from 0.2 Q to Q_{Max} . For selecting a proper notch & its dimension proceed with the follow-ing steps .

LET:

b = Bottom width of the canal , (m).

m = Side slope of canal .

Y = Depth of flow, (m).

A = Area of flow cross section = $bY+mY^2$

↑ = Wetted perimeter = $b+2Y\sqrt{m^2+1}$, (m) .

R = Hydraulic radius = $\frac{A}{P}$, (m) .

S = Canal bottom slope .

n = Manning's roughness coefficient .

Q = Discharge = $\frac{1}{n}AR^{2/3}S^{1/2}$, (m^3/s) .

V = Velocity = $\frac{Q}{A}$, (m/s) .

h_v = Velocity head = $\frac{V^2}{2g}$, (m) .

E = Energy head = Y+h , (m) .

P = Bottom width of control notch , (m) .

W = Control notch side slope .

T = Height of the notch , (m) .

STEP 1

For a given b, m, n, S & Q set up, calculate & fill the following table.

	Y(m)	$A(m^2)$	V(m/s)	h_v(m)	E(m)
Q Max =	.....	.....	.....	.....	.....
$0.2Q_{Max}$ =	.....	.....	.....	.....	.....

NOTE : To expedite the above calculation, use "tables of hydraulic properties of trapezodial canals".

STEP 2

From the 6 graphs presented for control notch, select the graph having the smallest P value which furnishes the full range of discharge. Enter the graph with Q_{Max} & its corresponding E . Read the value of "W" on the first curve which lies immediately to the right of the point , check in the same manner for $0.2Q_{Max}$ & its corresponding E. IF the curve has been the same for bpth discharge, read P & W values and go to step 3, otherwise try the graph with the next greater P value, and repeat the same procedure until one of the slope curve lies on the right of the two points .

STEP 3

SET:

T ⩾ Y WHEN Q IS MAX

THEN:

N = P+2WT

DESIGN EXAMPLE

GIVEN:

Q = 1.4 m^3/s

S_1 = 0.0005

m = 1.5:1

n = 0.025

b = 1.5 m

y_1 = 0.86 m

required:

bottom width of control notch : P

control notch side slope : W

height of notch : T

SOLUTION:

STEP (1)

$A_1 = 1.5\times0.86+1.5\times(0.86)^2 = 2.399\,m^2$

$V_1 = \frac{Q}{A} = 0.584$ m/s FOR Q MAX

$h_{v_1} = \frac{V^2}{2g} = \frac{0.584^2}{2\times9.81} = 0.02$ m

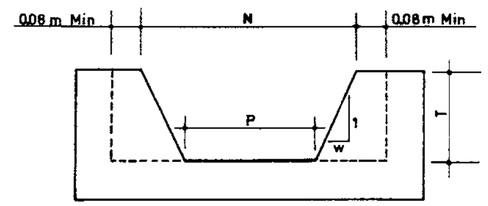

$E_1 = y_1+h_{v_1} = 0.86+0.02 = 0.88$ m

$0.2\times Q_{Max} = 0.280\ m^3/s$

$y_2 = 0.368$ m

$A_2 = 0.755\ m^2$

$v_2 = \frac{0.28}{A_2} = 0.371$ m/s

$h_{v_2} = 0.007$ m

$E_2 = y_2+h_{v_2} = 0.375$ m

	Y(m)	$A(m^2)$	V(m/s)	h_v(m)	E(m)
Q_{Max}=1.4	0.86	2.399	0.584	0.02	0.88
0.2Q=0.28	0.368	0.755	0.371	0.007	0.375

STEP (2)

From graphs on dwg :

a) For P = 0.40 :

a-1) For Q_{Max} : W = 0.50

a-2) For 0.2Q : W = 0.75

"The two choosen W are not the same".

b) For P = 0.50 :

b-1) For Q_{Max} : W = 0.50

b-2) For 0.2Q : W = 0.50

This control notch is satisfactory as it will act as a control for all - discharges between 1.4 m^3/s and 0.28 m^3/s

STEP (3)

T = 0.86

THEN :

N = 0.50+2x0.50x0.86 = 1.36

REFERENCE DWGS: For Graphs see dwg. № 12/5/2/02
For Plan & Section see dwg. № 12/5/1/01

Scale:	IRRIGATION & DRAINAGE STANDARDS	
Date:	DWG № 12/5/2/01	CONTROL NOTCH (PROCESS TO SELECT)
Approved:	Sheet № 2 of 4 Rev. №	

ISLAMIC REPUBLIC OF IRAN
MINISTRY OF PLAN & BUD
TECHNICAL RESEARCH AND STANDARD BUREAU

omoorepeyman.ir

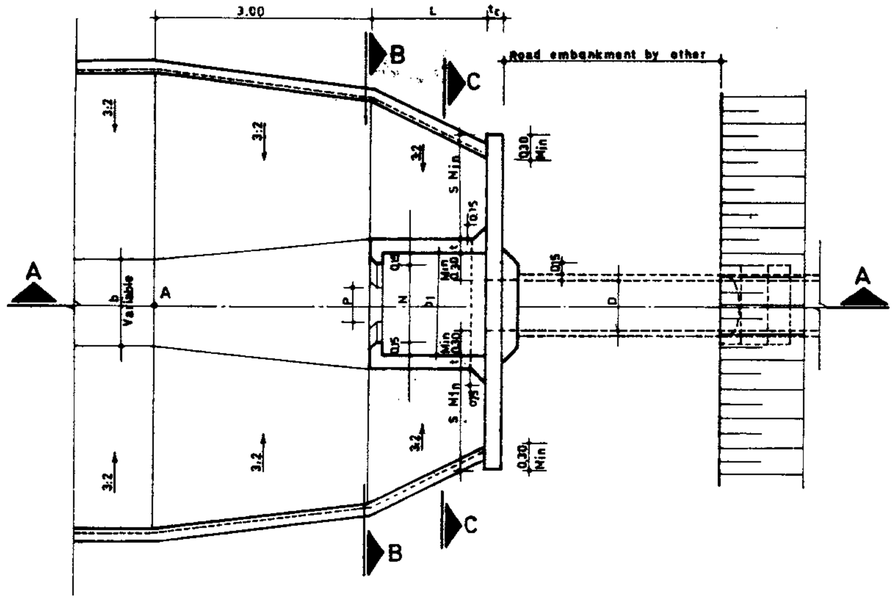

PLAN

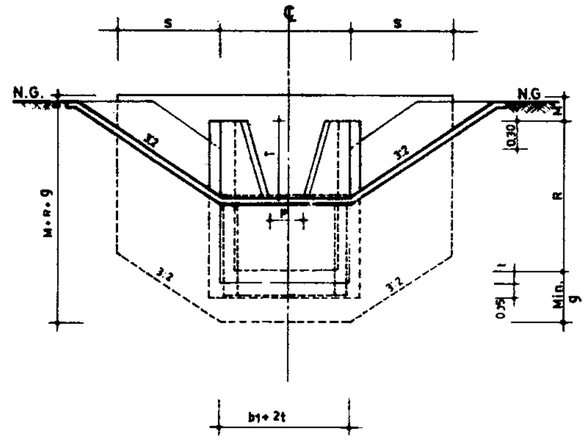

SECTION B_B

DIMENSION TABLE

Str. No.	D	R	L	t	t_c	M	S
300_1	0.30	0.80	1.10	0.15	0.15	0.30	1.20
300_2	0.30	1.50	1.10	0.15	0.15	0.30	1.20
400_1	0.40	0.80	1.10	0.15	0.15	0.30	1.20
400_2	0.40	1.50	1.10	0.15	0.15	0.30	1.20
450_1	0.45	0.80	1.10	0.15	0.15	0.30	1.20
450_2	0.45	1.55	1.10	0.18	0.15	0.30	1.20
500_1	0.50	0.90	1.10	0.15	0.15	0.30	1.20
500_2	0.50	1.60	1.25	0.18	0.20	0.30	1.20
600_1	0.60	1.00	1.10	0.15	0.15	0.30	1.20
600_2	0.60	1.70	1.40	0.18	0.20	0.30	1.20
700_1	0.70	1.10	1.10	0.15	0.15	0.40	1.30
700_2	0.70	1.80	1.70	0.18	0.20	0.40	1.30
800_1	0.80	1.20	1.10	0.15	0.15	0.45	1.45
800_2	0.80	1.90	1.85	0.18	0.20	0.45	1.45
900_1	0.90	1.30	1.25	0.15	0.15	0.45	1.45
900_2	0.90	2.00	2.00	0.18	0.20	0.45	1.45
1000_1	1.00	1.40	1.40	0.15	0.15	0.45	1.45
1000_2	1.00	2.10	2.15	0.18	0.20	0.45	1.45
1200_1	1.20	1.60	1.55	0.18	0.20	0.45	1.45
1400_1	1.40	1.80	1.80	0.18	0.20	0.45	1.45
1600_1	1.60	2.00	2.00	0.18	0.20	0.45	1.45

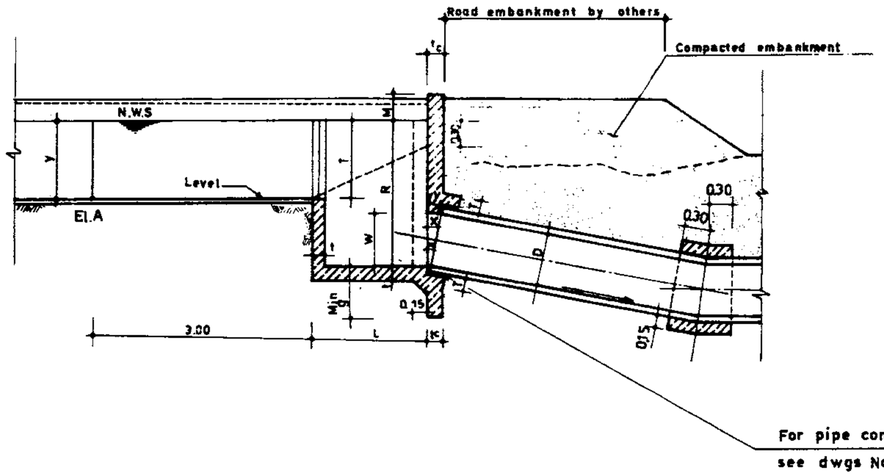

SECTION A_A

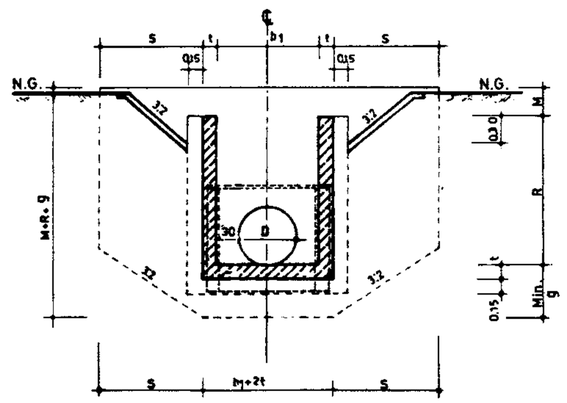

SECTION C_C

NOTES:

1- To determine values for P,T & N proceed with step by step design procedure given in dwg. No 12/5/2/01. and dwg No 12/5/2/02

Side slope of notch is shown on dwg. No. 12/5/2/01

2_For pipe diameter selection see dwg No. 11/6/1/01 or dwgs. 11/3/1/01 to 11/3/2/18 or dwgs.11/2/1/01 to 11/2/2/09

3_For determining inlet Box width

set $b_1 = N + 0.30$

and $b_1 = D + 0.60$

and chose the greater value.

REFERENCE DWGS:

For procedure to select control notch see dwg. No. 12/5/2/01
For graph see dwg. No. 12/5/2/02
For type of reinforcement see dwg. No. 12/5/3/01
For detail pipe connection to structure see dwgs. No. 17/1/1/01 TO 17/1/1/03

Scale : N.T.S	IRRIGATION & DRAINAGE STANDARDS		ISLAMIC REPUBLIC OF IRAN MINISTRY OF PLAN & BUDJE TECHNICAL RESEARCH AND STANDARD BUREAU
Date :	DWG. No 12/5/1/01	CONTROL NOTCH (PLAN & SECTION)	
Approved :	Sheet No. 1 of 4 Rev No.		

omoorepeyman.ir

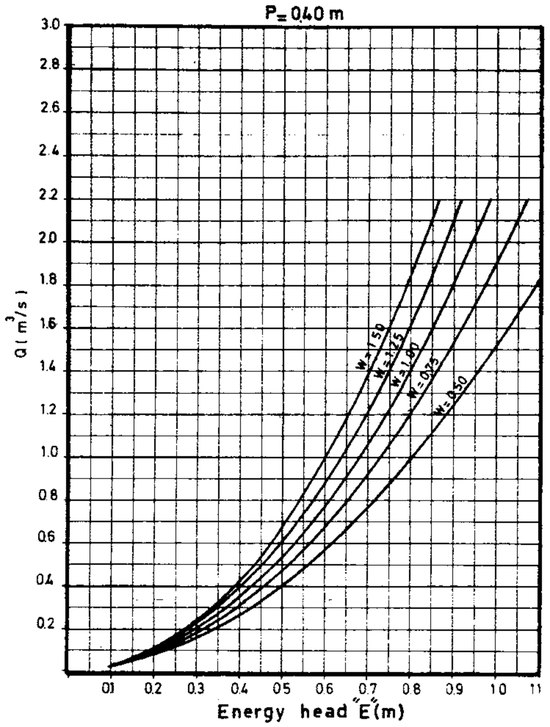

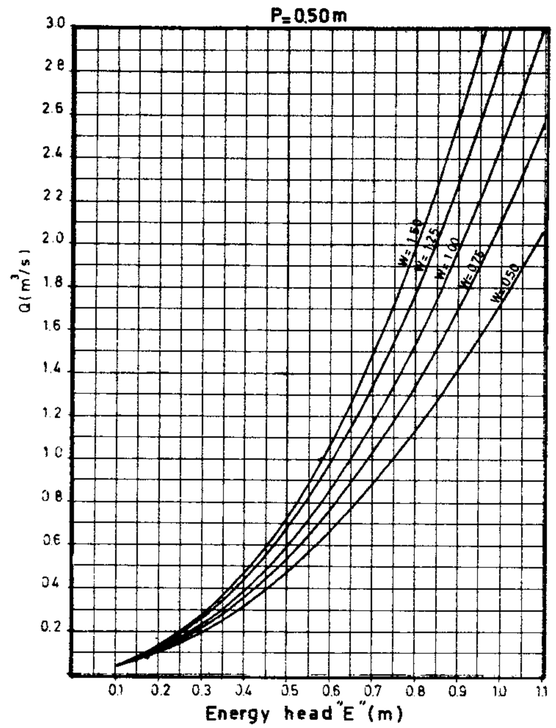

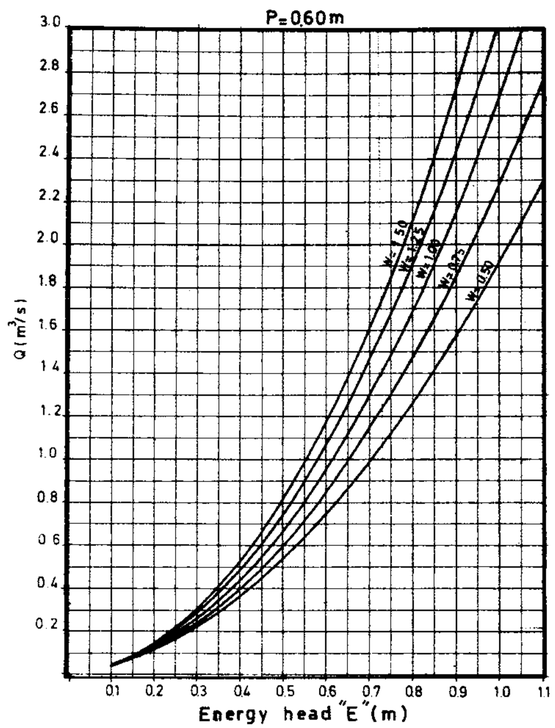

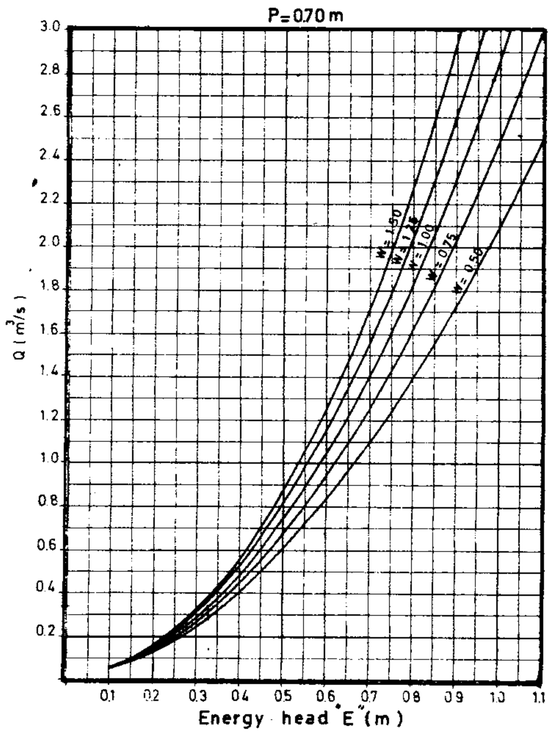

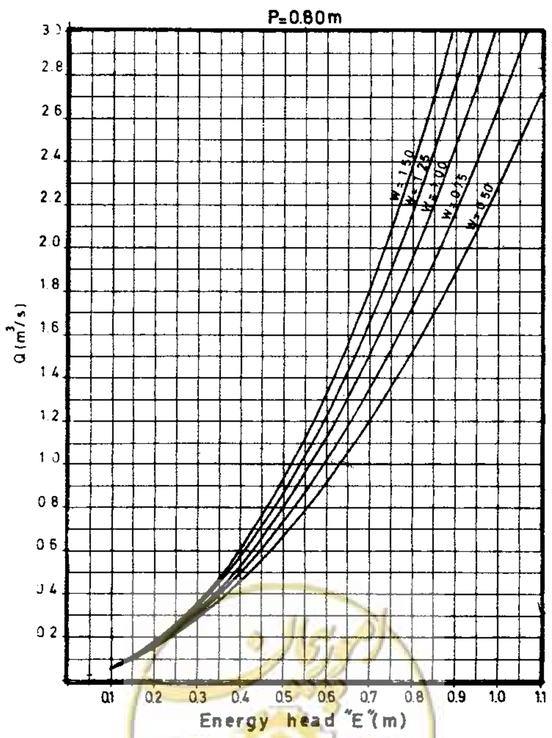

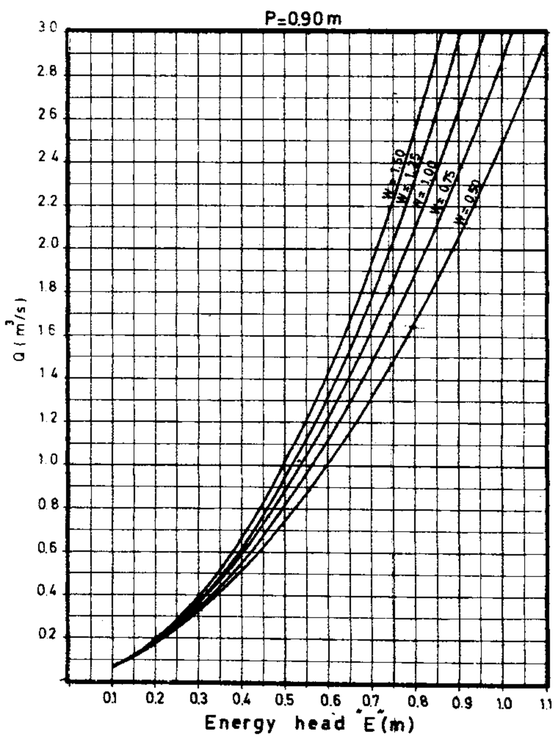

REFERENCE DWGS: For Profiles to select control notch see dwg. Nº 12/5/2/01
For Plan Section see dwg. Nº 12/5/1/01

Scale:	IRRIGATON & DRAINAGE STANDARDS		
Date:	DWG. Nº 12/5/2/02		CONTROL NOTCH (GRAPHS)
Approved:	Sheet Nº 3 of 4	Rev. Nº	

ISLAMIC REPUBLIC OF IRAN
MINISTRY OF PLAN & BUD
TECHNICAL RESEARCH AND
STANDARD BUREAU

@omoorepeyman.ir

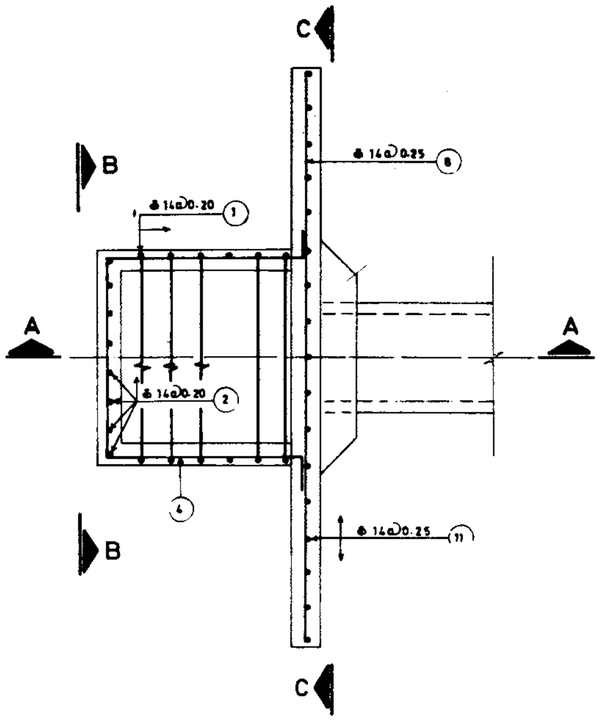

PLAN

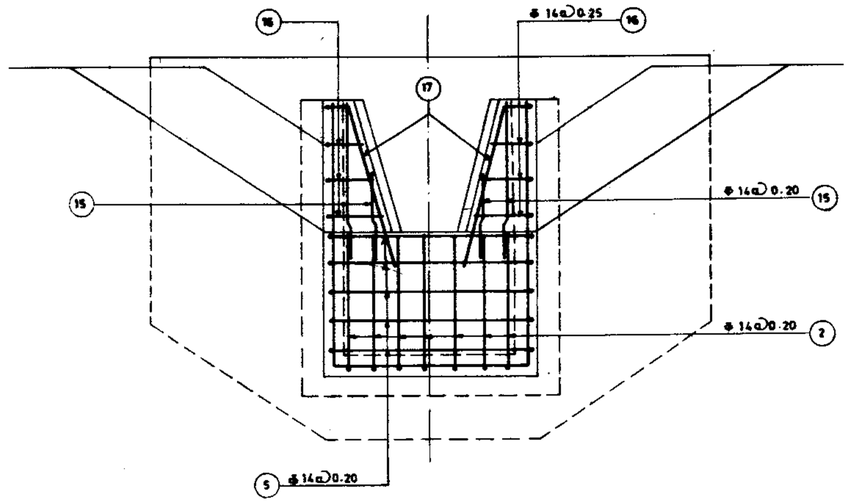

SECTION B-B

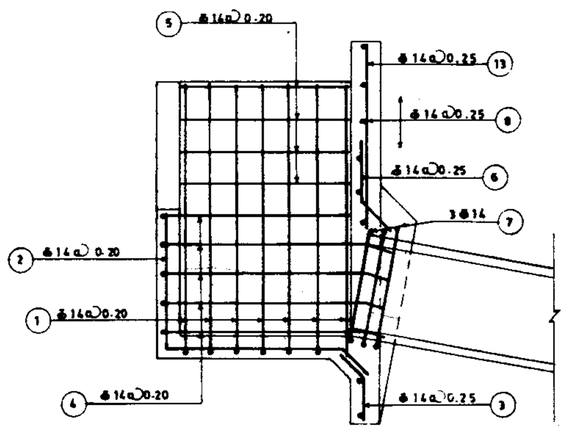

SECTION A-A

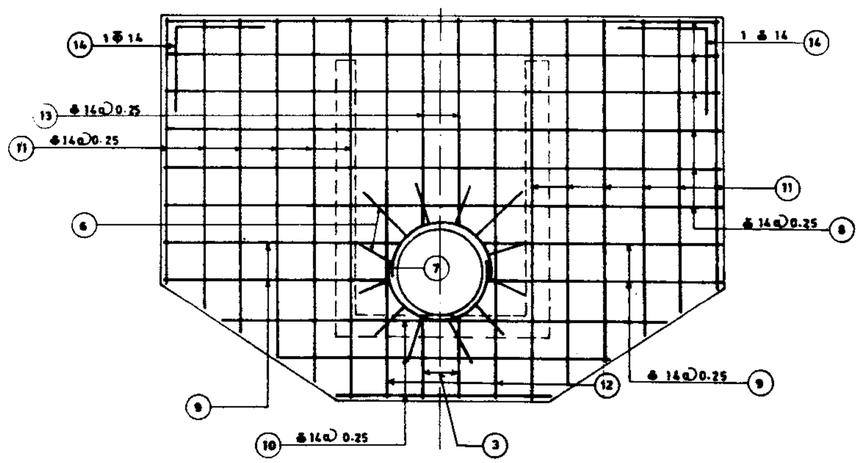

SECTION C-C

REFERENCE DWGS: For Plan & Section see dwg. Nº 12/5/1/01
For Process to select control notch see dwg. Nº 12/5/2/01

Scale:	IRRIGATIO & DRAINAGE STANDARDS		
Date:	DWG Nº 12/5/3/01		CONTROL NOTCH (REINFORCEMENT) (TYPICAL POSITION OF BARS)
Approved:	Sheet Nº 4 of 4	Rev Nº	

ISLAMIC REPUBLIC OF IRAN
MINISTRY OF PLAN & BU[illegible]T
TECHNICAL RESEARCH A[illegible]
STANDARD BUREAU

@omoorepeyman.ir

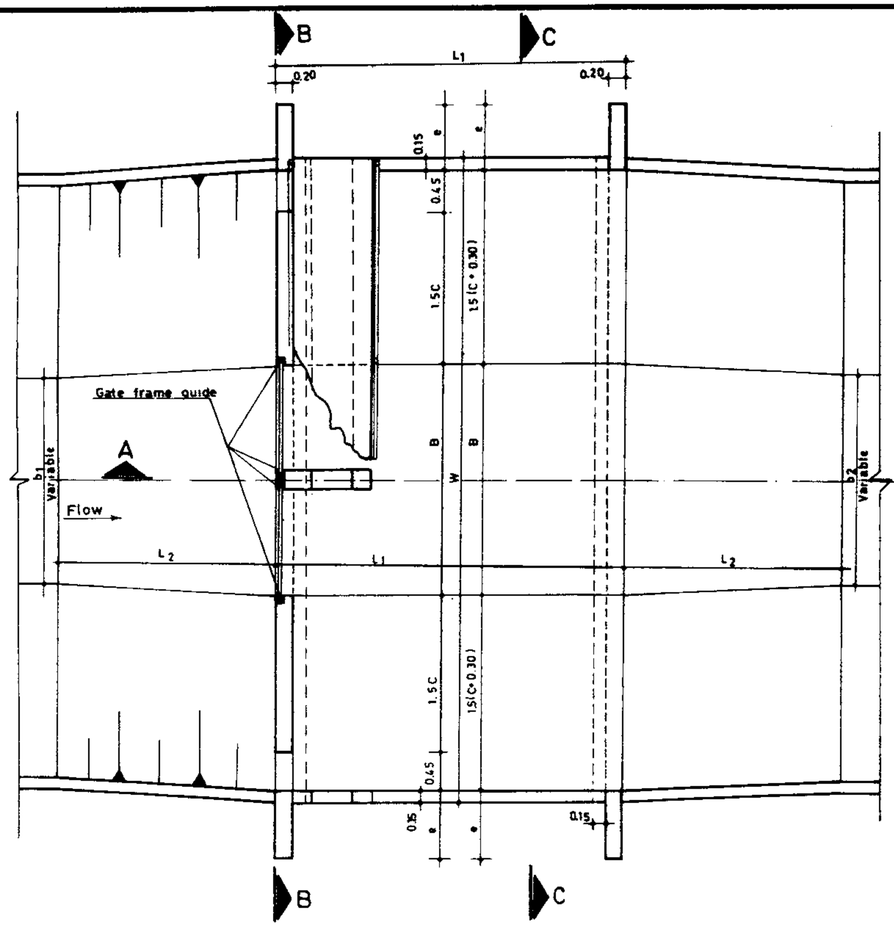

PLAN

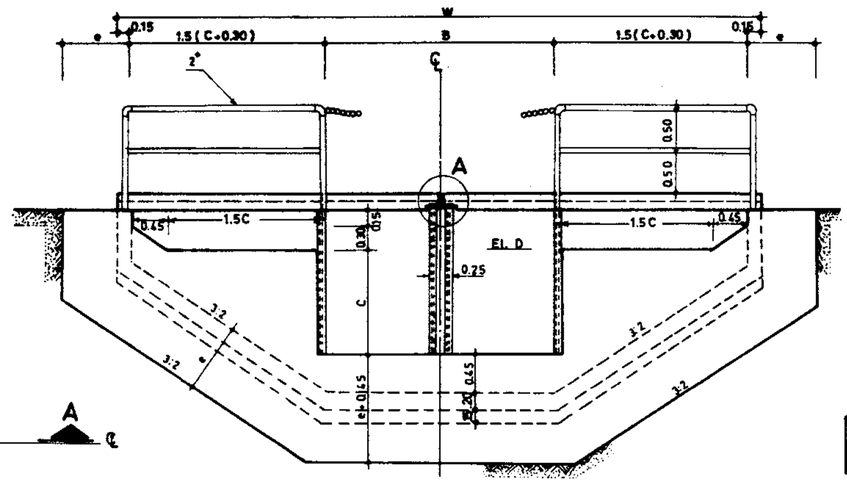

SECTION B-B

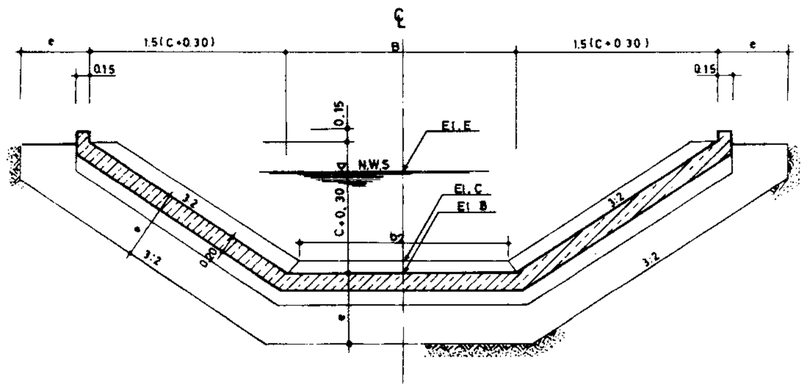

SECTION C-C

DIMENSION TABLE

Str #	Max Q m³/s	SLIDE GATE WIDTH m	SLIDE GATE HEIGHT m	FRM HT. m	B m	C m	L_1 m	e m	W m	X m	R m	L_2 m	N #	R/Bar Kg	Conc. m³
1	1.600	1.00	0.80	1.70	2.25	0.85	2.50	0.80	6.00	1.35	0.300	2.00	5	617.79	7.89
2	1.800	1.00	0.90	1.80	2.25	0.95	2.60	0.80	6.30	1.40	0.350	2.50	5	660.48	8.46
3	2.000	1.00	1.00	2.20	2.25	1.05	3.15	0.80	6.60	1.50	0.300	2.50	5	747.35	10.05
4	2.200	1.00	1.10	2.40	2.25	1.15	3.85	0.80	6.90	1.25	0.325	2.50	6	855.69	11.59
5	2.160	1.20	0.90	1.90	2.65	1.00	2.60	0.80	6.85	1.25	0.300	2.50	6	712.26	9.30
6	2.400	1.20	1.00	2.10	2.65	1.10	3.15	0.80	7.15	1.30	0.325	2.50	6	796.61	10.92
7	2.640	1.20	1.10	2.40	2.65	1.20	3.85	0.80	7.40	1.35	0.350	2.50	6	922.03	12.39
8	2.520	1.40	0.90	2.00	3.05	1.00	2.60	0.80	7.25	1.30	0.375	2.50	6	751.46	9.74
9	2.800	1.40	1.00	2.20	3.05	1.10	3.15	0.80	7.55	1.40	0.275	3.00	8	818.54	11.14
10	3.080	1.40	1.10	2.40	3.05	1.20	3.85	0.80	7.85	1.45	0.300	3.00	6	971.08	12.94
11	3.200	1.60	1.10	2.20	3.45	1.10	3.15	0.80	7.98	1.45	0.350	3.00	6	879.30	11.64

Str.	1	2	3	4	5	6	7	8	9	10	11
Form m²	50.25	53.26	56.50	60.11	56.60	59.96	63.49	58.68	62.04	65.65	64.16

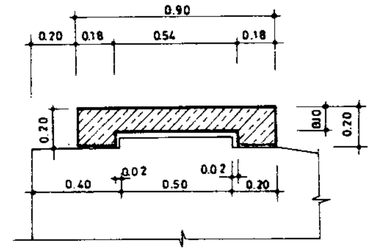

DETAIL „B"

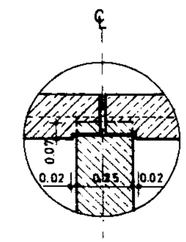

DETAIL „A"

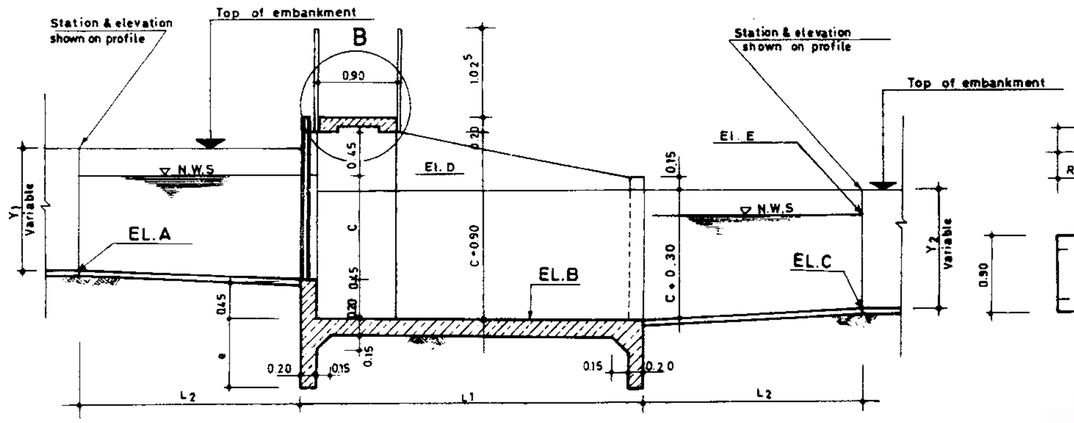

SECTION A-A

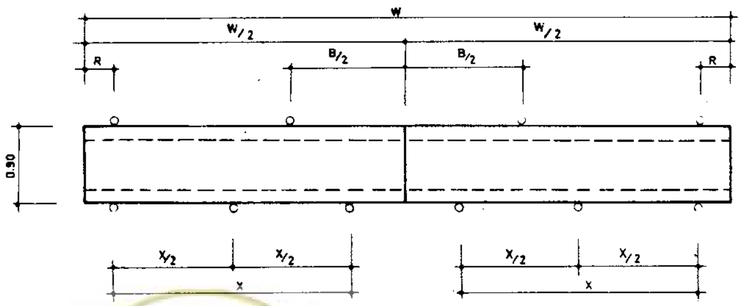

PLAN
OPERATING DECK

REFERENCE DWGS:
For reinforcement see dwg. Nº. 12/4/3/01
For general notes and minimum requirements see dwgs. Nº 20/2/1/01 TO 20/2/1/03
For check drops selecting procedure see dwg. Nº 12/3/1/01
For construction detail of "gate frame guide" see dwg. Nº 12/6/1/01

Scale: N.T.S	IRRIGATION & DRAINAGE STANDARDS		
Date:	DWG. Nº 12/4/1/01	45 Cm CHECK DROP (Concrete canal) Q=1600 ~ 3200 L/Sec PLAN & SECTION	
Approved:	Sheet Nº 1 of 5	Rev.Nº	

ISLAMIC REPUBLIC OF IRAN
MINISTRY OF PLAN & BUDGET
TECHNICAL RESEARCH AND STANDARD BUREAU

@omoorpeyman.ir

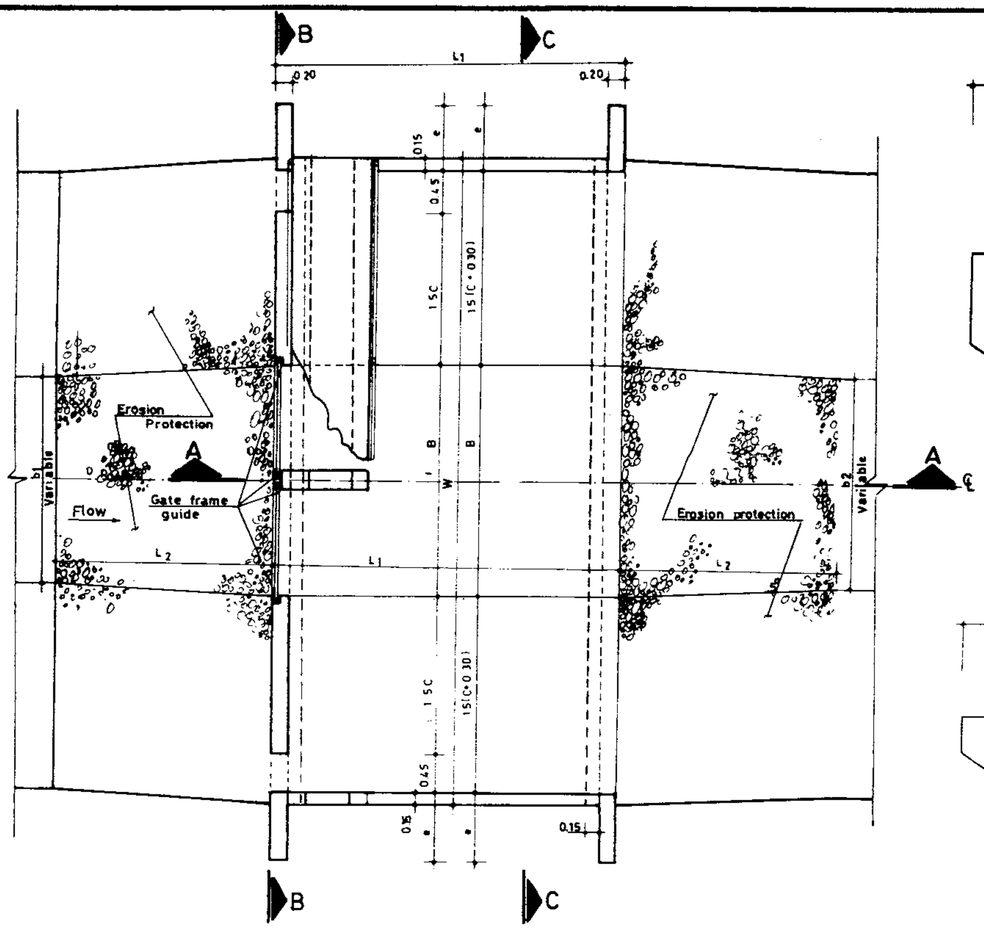

PLAN

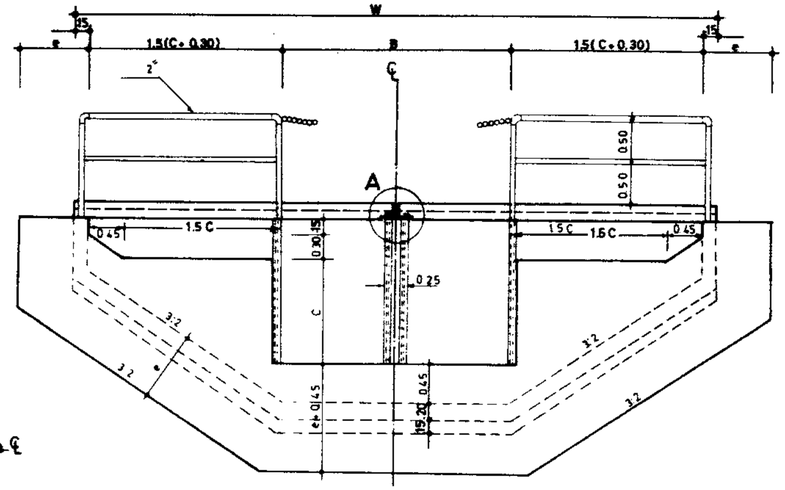

SECTION B-B

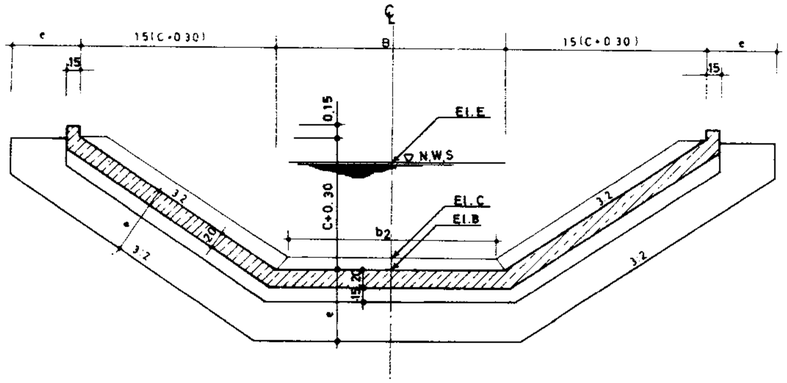

SECTION C-C

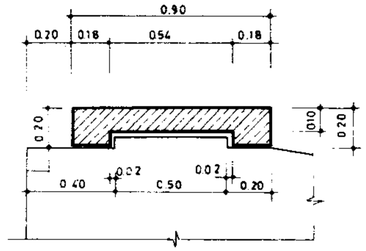

DETAIL „B"

DIMENSION TABLE

Str. #	Max Q m^3/s	SLIDE GATE WIDTH m	SLIDE GATE HEIGHT m	FRM HT. m	STANDARD DIMENSION B m	C m	L_1 m	e m	W m	X m	R m	L_2 m	N #	R/Bat Kg	Conc. m^3
1	1 600	1.00×0.80	1.70	2 25	0.85	2.50	0.80	6.00	1.35	0.300	2.00	5	617. 79	7. 89
2	1.800	1.00×0.90	1.80	2 25	0.95	2 60	0.80	6.30	1.40	0.350	2 50	5	660.48	8.46
3	2000	1.00×1 00	2.20	2 25	1.05	3 15	0.80	6 60	1.50	0.300	2 50	5	747. 35	10.05
4	2 200	1.00×1 10	2 40	2 25	1.15	3.85	0.80	6.90	1.25	0.325	2 50	6	855. 69	11.58
5	2 160	1.20×0 90	1.90	2 65	1 00	2 60	0.80	6 85	1.25	0.300	2 50	6	712. 26	9. 30
6	2 400	1.20×1.00	2 10	2 65	1 10	3 15	0.80	7 15	1 30	0.325	2 50	6	796. 61	10.92
7	2 640	1.20×1 10	2 40	2 65	1 20	3.85	0.80	7 40	1.35	0.350	2 50	6	922.03	12.39
8	2 520	1.40×0.90	2 00	3 05	1.00	2 60	0.80	7 25	1 30	0 375	2 50	6	751.46	9.74
9	2 800	1.40×1 00	2 20	3 05	1 10	3 15	0 80	7 55	1 40	0 275	3.00	6	818.54	11.14
10	3080	1.40×1 10	2 40	3 05	1 20	3 85	0.80	7 85	1 45	0300	3 00	6	971.08	12.94
11	3 200	1 60×1.10	2 20	3 45	1 10	3 15	0 80	7 98	1 45	0 350	3 00	6	879.30	11 64

Str.	1	2	3	4	5	6	7	8	9	10	11
Form m^2	50.25	53.26	56.50	60.11	56.80	59.96	63.45	58.68	62.04	65.65	64.16

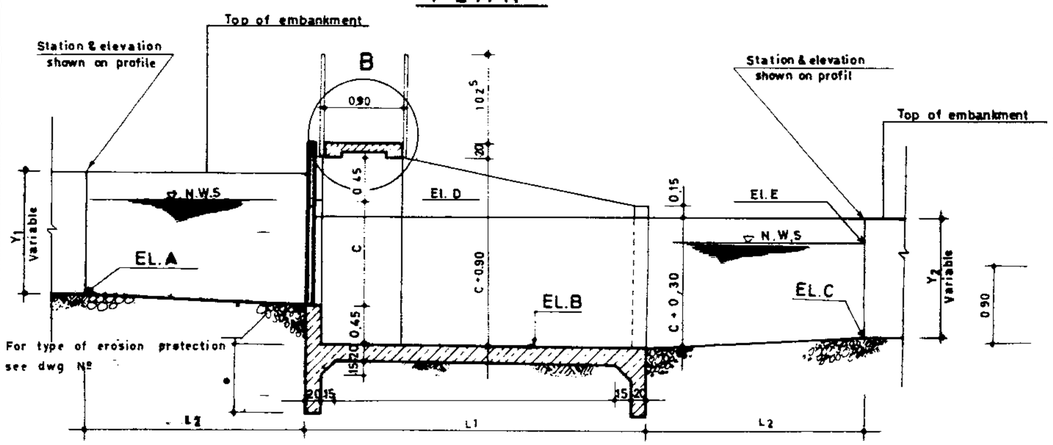

SECTION A-A

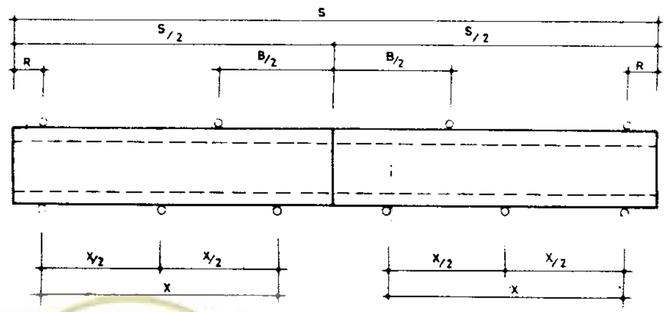

PLAN
OPERATING DECK

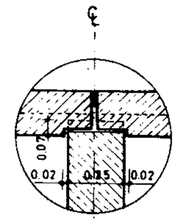

DETAIL „A"

REFERENCE DWGS
For reinforcement see dwg. Nº. 12/4/3/01
For general notes and minimum requirements see dwgs.Nº 20/2/1/01 TO 20/2/1/03
For check drops selecting procedure see dwg. Nº 12/3/1/01
For construction detail of "gate frame guide" see dwg. Nº 12/6/1/01

Scale: N.T.S.	IRRIGATION & DRAINAGE STANDARDS		
Date:	DWG. Nº 12/4/1/02		45 Cm CHECK DROP (Earth canal) Q=1600~3200 L/Sec PLAN & SECTION
Approved:	Sheet Nº 2 of 5	Rev.Nº	

ISLAMIC REPUBLIC OF IRAN
MINISTRY OF PLAN & BUDGET
TECHNICAL RESEARCH AND STANDARD BUREAU

omoorepeyman.ir

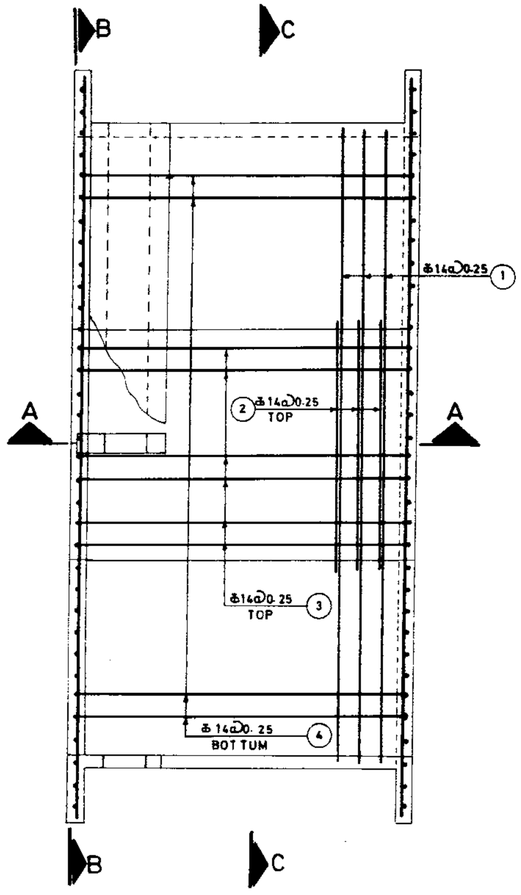

PLAN

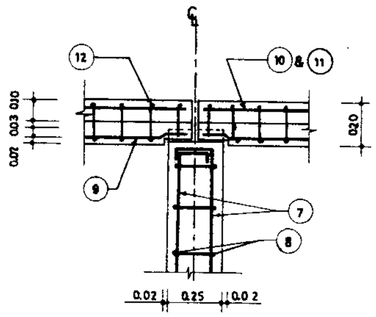

DETAIL „A"

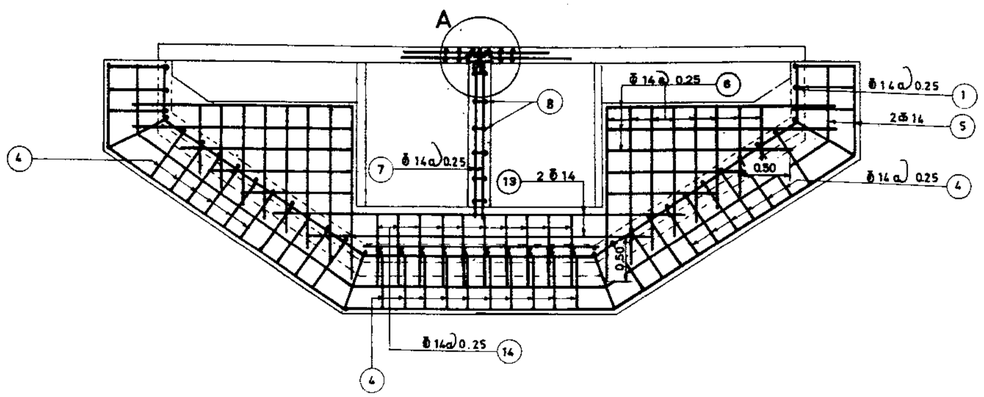

SECTION B-B

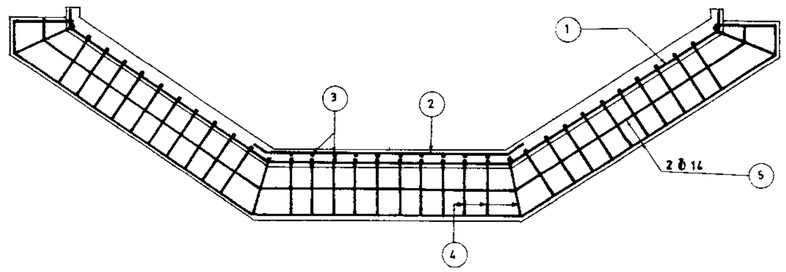

SECTION C-C

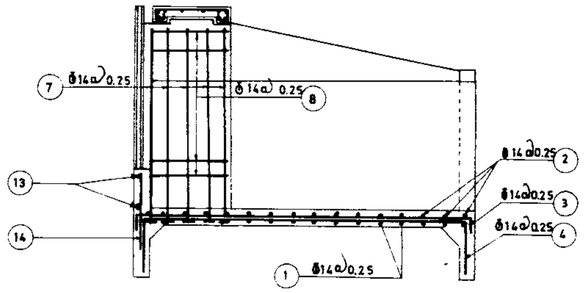

SECTION A-A

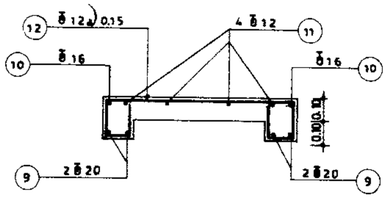

SECTION D-D

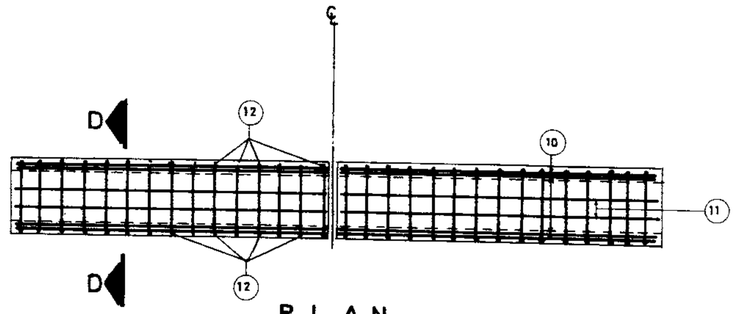

PLAN
OPERATING DECK

REFERENCE DWGS. For construction detail see dwgs. № 12/4/1/01 & 12/4/1/02
For reinforcement tables see dwgs. № 12/4/3/02 12/4/3/03

Scale: 1:50	IRRIGATION & DRAINAGE STANDARDS	
Date:	DWG. № 12/4/3/01	CHECK DROP Q = 1600 ~ 3200 l/sec. REINFORCEMENT PLAN & SECTION
Approved:	Sheet № 3 of 5 Rev.№	

ISLAMIC REPUBLIC OF IRAN
MINISTRY OF PLAN & BUDGET
TECHNICAL RESEARCH AND STANDARD BUREAU

omoorepeyman.ir

STR.1

Pos.	Φ	Nº	FORM	Unit leng	Total leng	U.W.t kg	Total weight
1	14	11	0.20 / 0.75 — 2.33 — 2.07 — 0.20 / 0.75	7.42	81.62	1.21	98.76
2	14	11	0.10 — 2.53 — 0.10	2.73	30.03	1.21	36.34
3	14	10	0.20 — 2.42 — 0.20	2.82	28.20	1.21	34.12
4	14	33	0.60 — 2.42 — 0.60	3.62	119.46	1.21	144.55
5	14	4	0.22 / 0.78 — 2.41~2.55 — 2.24~2.42 — 0.22 / 0.78	8.14	32.56	1.21	39.40
6	14	20	0.50 ~ 2.38	1.44	28.80	1.21	34.85
7	14	5	0.15 — 0.17 — 0.15 / 0.30 — 0.30 — 1.80	4.67	23.35	1.21	28.25
8	14	8	0.15 — 0.90 — 0.15 / 0.17 — 0.17	2.74	21.92	1.21	26.52
9	20	8	0.10 — 2.92 — 0.10	3.12	24.96	2.47	61.65
10	16	4	0.10 — 2.92 — 0.10	3.12	12.48	1.58	19.72
11	12	8	0.10 — 2.92 — 0.10	3.12	24.96	0.888	22.16
12	12	42	0.12 — 0.12 — 0.10 — 0.82 — 0.10 — 0.12 — 0.12	1.50	63.00	0.888	55.94
13	14	2	4.50	4.50	9.00	1.21	10.89
14	14	10	1.00	1.00	10.00	1.21	12.10
							625.25 Kg

STR.2

Pos.	Φ	Nº	FORM	Unit leng	Total leng	U.W.t kg	Total weight
1	14	12	0.20 / 0.75 — 2.33 — 2.25 — 0.20 / 0.75	7.78	93.36	1.21	112.97
2	14	12	0.10 — 2.53 — 0.10	2.73	32.76	1.21	39.64
3	14	10	0.20 — 2.52 — 0.20	2.92	29.20	1.21	35.33
4	14	34	0.60 — 2.43 — 0.60	3.63	123.42	1.21	149.34
5	14	4	0.22 / 0.78 — 2.41~2.55 — 2.43~2.60 — 0.22 / 0.78	8.50	34.00	1.21	41.14
6	14	22	0.50 ~ 2.53	1.52	33.44	1.21	40.46
7	14	5	0.15 — 0.17 — 0.15 / 0.30 — 0.30 — 1.90	4.87	24.35	1.21	29.46
8	14	9	0.15 — 0.90 — 0.15 / 0.17 — 0.17	2.74	24.66	1.21	29.84
9	20	8	0.10 — 3.07 — 0.10	3.27	26.16	2.47	64.62
10	16	4	0.10 — 3.07 — 0.10	3.27	13.08	1.58	20.67
11	12	8	0.10 — 3.07 — 0.10	3.27	26.16	0.888	23.23
12	12	44	0.12 — 0.12 — 0.10 — 0.82 — 0.10 — 0.12 — 0.12	1.50	66.00	0.888	58.61
13	14	2	4.50	4.50	9.00	1.21	10.89
14	14	10	1.00	1.00	10.00	1.21	12.10
							668.30 Kg

STR.3

Pos.	Φ	Nº	FORM	Unit leng	Total leng	U.W.t kg	Total weight
1	14	14	0.20 / 0.75 — 2.33 — 2.43 — 0.20 / 0.75	8.14	113.96	1.21	137.89
2	14	14	0.10 — 2.53 — 0.10	2.73	38.22	1.21	46.25
3	14	10	0.20 — 3.07 — 0.20	3.47	34.70	1.21	41.99
4	14	36	0.60 — 2.98 — 0.60	4.18	150.48	1.21	182.08
5	14	4	0.22 / 0.78 — 2.41~2.55 — 2.60~2.78 — 0.22 / 0.78	8.86	35.44	1.21	42.88
6	14	24	0.50 ~ 2.68	1.59	38.16	1.21	46.17
7	14	5	0.15 — 0.17 — 0.15 / 0.30 — 0.30 — 2.0	5.07	25.35	1.21	30.67
8	14	9	0.15 — 0.90 — 0.15 / 0.17 — 0.17	2.74	24.66	1.21	29.84
9	20	8	0.10 — 3.22 — 0.10	3.42	27.36	2.47	67.58
10	16	4	0.10 — 3.22 — 0.10	3.42	13.68	1.58	21.61
11	12	8	0.10 — 3.22 — 0.10	3.42	27.36	0.888	24.30
12	12	46	0.12 — 0.12 — 0.10 — 0.82 — 0.10 — 0.12 — 0.12	1.50	69.00	0.888	61.27
13	14	2	4.50	4.50	9.00	1.21	10.89
14	14	10	1.00	1.00	10.00	1.21	12.10
							755.52 Kg

STR.4

Pos.	Φ	Nº	FROM	Unit leng	Total leng	U.W. kg	Total weight
1	14	17	0.20 / 0.75 — 2.33 — 2.61 — 0.20 / 0.75	8.50	144.50	1.21	174.85
2	14	17	0.10 — 2.53 — 0.10	2.73	46.41	1.21	56.16
3	14	10	0.20 — 3.77 — 0.20	4.17	41.70	1.21	50.46
4	14	37	0.60 — 3.68 — 0.60	4.88	180.56	1.21	218.48
5	14	4	0.22 / 0.78 — 2.41~2.55 — 2.78~2.96 — 0.22 / 0.78	9.22	36.88	1.21	44.62
6	14	26	0.50 ~ 2.83	1.67	43.42	1.21	52.54
7	14	5	0.15 — 0.17 — 0.15 / 0.30 — 0.30 — 2.10	5.27	26.35	1.21	31.88
8	14	9	0.15 — 0.90 — 0.15 / 0.17 — 0.17	2.74	24.66	1.21	29.84
9	20	8	0.10 — 3.37 — 0.10	3.57	28.56	2.47	70.54
10	16	4	0.10 — 3.37 — 0.10	3.57	14.28	1.58	22.56
11	12	8	0.10 — 3.37 — 0.10	3.57	28.56	0.888	25.36
12	12	48	0.12 — 0.12 — 0.10 — 0.82 — 0.10 — 0.12 — 0.12	1.50	72.00	0.888	63.94
13	14	2	4.50	4.50	9.00	1.21	10.89
14	14	10	1.00	1.00	10.00	1.21	12.10
							864.22 Kg

STR.5

Pos.	Φ	Nº	FORM	Unit leng	Total leng	U.W.t kg	Total weight
1	14	12	0.20 / 0.75 — 2.57 — 2.34 — 0.20 / 0.75	8.23	98.76	1.21	119.50
2	14	12	0.10 — 2.77 — 0.10	2.97	35.64	1.21	43.12
3	14	12	0.20 — 2.52 — 0.20	2.92	35.04	1.21	42.40
4	14	37	0.60 — 2.43 — 0.60	3.63	134.31	1.21	162.52
5	14	4	0.22 / 0.78 — 2.81~2.95 — 2.51~2.69 — 0.22 / 0.78	9.08	36.32	1.21	43.95
6	14	22	0.50 ~ 2.60	1.55	34.10	1.21	41.26
7	14	5	0.15 — 0.17 — 0.15 / 0.30 — 0.30 — 1.95	4.97	24.85	1.21	30.07
8	14	9	0.15 — 0.90 — 0.15 / 0.17 — 0.17	2.74	24.66	1.21	29.84
9	20	8	0.10 — 3.35 — 0.10	3.55	28.40	2.47	70.15
10	16	4	0.10 — 3.35 — 0.10	3.55	14.20	1.58	22.44
11	12	8	0.10 — 3.35 — 0.10	3.55	28.40	0.888	25.22
12	12	48	0.12 — 0.12 — 0.10 — 0.82 — 0.10 — 0.12 — 0.12	1.50	72.00	0.888	63.94
13	14	2	4.90	4.90	9.80	1.21	11.86
14	14	12	1.00	1.00	12.00	1.21	14.52
							720.79 Kg

STR.6

Pos.	Φ	Nº	FORM	Unit leng	Total leng	U.W.t kg	Total weight
1	14	14	0.20 / 0.75 — 2.57 — 2.52 — 0.20 / 0.75	8.56	119.84	1.21	145.01
2	14	14	0.10 — 2.77 — 0.10	2.97	41.58	1.21	50.31
3	14	12	0.20 — 3.07 — 0.20	3.47	41.64	1.21	50.38
4	14	38	0.60 — 2.98 — 0.60	4.18	158.84	1.21	192.20
5	14	4	0.22 / 0.78 — 2.81~2.95 — 2.69~2.87 — 0.22 / 0.78	9.44	37.76	1.21	45.69
6	14	24	0.50 ~ 2.75	1.63	39.12	1.21	47.34
7	14	5	0.15 — 0.17 — 0.15 / 0.30 — 0.30 — 2.05	5.17	25.85	1.21	31.28
8	14	9	0.15 — 0.90 — 0.15 / 0.17 — 0.17	2.74	24.66	1.21	29.84
9	20	8	0.10 — 3.50 — 0.10	3.70	29.60	2.47	73.11
10	16	4	0.10 — 3.50 — 0.10	3.70	14.80	1.58	23.38
11	12	8	0.10 — 3.50 — 0.10	3.70	29.60	0.888	26.28
12	12	48	0.12 — 0.12 — 0.10 — 0.82 — 0.10 — 0.12 — 0.12	1.50	72.00	0.888	63.94
13	14	2	4.90	4.90	9.80	1.21	11.86
14	14	12	1.00	1.00	12.00	1.21	14.52
							805.14 Kg

REFERENCE DWGS: For reinforcement see dwg Nº. 12/4/3/01

For bars with variable unit length see note under the same title at dwg. Nº 20/2/1/01

Scale:	IRRIGATION & DRAINAGE STANDARDS	
Date:	DWG. Nº 12/4/3/02	CHECK DROP
Approved:	Sheet Nº 4 of 5 — Rev. Nº	LIST OF REINFORCEMENT STR.1 TO 6

ISLAMIC REPUBLIC OF IRAN
MINISTRY OF PLAN & BUD
TECHNICAL RESEARCH AND STANDARD BUREAU

omoorepeyman.ir

STR.7

Pos.	Φ	Nº	FORM	Unit leng	Total leng	U.W.t kg	Total weight
1	14	17	0.20 0.75 2.57 2.70 0.20 0.75	8.92	151.64	1.21	183.48
2	14	17	0.10 2.77 0.10	2.97	50.49	1.21	61.09
3	14	12	0.20 3.77 0.20	4.17	50.04	1.21	60.55
4	14	40	0.60 3.68 0.60	4.88	195.20	1.21	236.19
5	14	4	0.78 0.32 2.81~2.95 2.87~3.05 0.78 0.32	9.80	39.20	1.21	47.43
6	14	26	0.50~2.90	1.70	44.20	1.21	53.48
7	14	5	0.15 0.17 0.15 0.30 0.30 2.15	5.37	26.85	1.21	32.49
8	14	10	0.15 0.90 0.15 0.17 0.17	2.74	27.40	1.21	33.15
9	20	8	0.10 3.65 0.10	3.85	30.80	2.47	76.08
10	16	4	0.10 3.65 0.10	3.85	15.40	1.58	24.33
11	12	8	0.10 3.65 0.10	3.85	30.80	0.888	27.35
12	12	52	0.82 0.12 0.12 0.10 0.10 0.12 0.12	1.50	78.00	0.888	69.26
13	14	2	4.90	4.90	9.80	1.21	11.86
14	14	12	1.00	1.00	12.00	1.21	14.52
							931.26 Kg.

STR.8

Pos.	Φ	Nº	FORM	Unit leng	Total leng	U.W.t kg	Total weight
1	14	12	0.20 0.75 2.97 2.34 0.20 0.75	8.60	103.20	1.21	124.87
2	14	12	0.10 3.17 0.10	3.37	40.44	1.21	48.93
3	14	14	0.20 2.52 0.20	2.92	40.88	1.21	49.46
4	14	38	0.60 2.43 0.60	3.63	137.94	1.21	166.91
5	14	4	0.22 0.78 3.21~3.35 2.51~2.65 0.22 0.78	9.48	37.92	1.21	45.88
6	14	22	0.50~2.60	1.55	34.10	1.21	41.26
7	14	5	0.15 0.17 0.15 0.30 0.30 1.95	4.97	24.85	1.21	30.07
8	14	9	0.15 0.90 0.15 0.17 0.17	2.74	24.66	1.21	29.84
9	20	8	0.10 3.55 0.10	3.75	30.00	2.47	74.10
10	16	4	0.10 3.55 0.10	3.75	15.00	1.58	23.70
11	12	8	0.10 3.55 0.10	3.75	30.00	0.888	26.64
12	12	52	0.82 0.12 0.12 0.10 0.10 0.12 0.12	1.50	78.00	0.888	69.26
13	14	2	5.30	5.30	10.60	1.21	12.83
14	14	14	1.00	1.00	14.00	1.21	16.94
							760.69 Kg.

STR.9

Pos.	Φ	Nº	FORM	Unit leng	Total leng	U.W.t kg	Total weight
1	14	14	0.20 0.75 2.97 2.52 0.20 0.75	8.96	125.44	1.21	151.78
2	14	14	0.10 3.17 0.10	3.37	47.18	1.21	57.09
3	14	14	0.20 3.07 0.20	3.47	48.58	1.21	58.78
4	14	40	0.60 2.98 0.60	3.58	143.20	1.21	173.27
5	14	4	0.22 0.78 3.21~3.35 2.69~2.83 0.22 0.78	9.84	39.36	1.21	47.63
6	14	24	0.50~2.75	1.63	39.12	1.21	47.34
7	14	5	0.15 0.17 0.15 0.30 0.30 2.05	5.17	25.85	1.21	31.28
8	14	9	0.15 0.90 0.15 0.17 0.17	2.74	24.66	1.21	29.84
9	20	8	0.10 3.70 0.10	3.90	31.20	2.47	77.06
10	16	4	0.10 3.70 0.10	3.90	15.60	1.58	24.65
11	12	8	0.10 3.70 0.10	3.90	31.20	0.888	27.71
12	12	54	0.82 0.12 0.12 0.10 0.10 0.12 0.12	1.50	81.00	0.888	71.93
13	14	2	5.20	5.30	10.60	1.21	12.83
14	14	14	1.00	1.00	14.00	1.21	16.94
							828.13 Kg

STR.10

Pos.	Φ	Nº	FORM	Unit leng	Total leng	U.W.t kg	Total weight
1	14	17	0.20 0.75 2.97 2.70 0.20 0.75	9.32	158.44	1.21	191.71
2	14	17	0.10 3.17 0.10	3.37	57.29	1.21	69.32
3	14	14	0.20 3.77 0.20	4.17	58.38	1.21	70.64
4	14	41	0.60 3.68 0.60	4.88	200.08	1.21	242.10
5	14	4	0.22 0.78 3.21~3.35 2.87~3.05 0.22 0.78	10.20	40.80	1.21	49.37
6	14	26	0.50~2.90	1.70	44.20	1.21	53.48
7	14	5	0.15 0.17 0.15 0.30 0.30 2.15	5.37	26.85	1.21	32.49
8	14	10	0.15 0.90 0.15 0.17 0.17	2.74	27.40	1.21	33.15
9	20	8	0.10 3.85 0.10	4.05	32.40	2.47	80.03
10	16	4	0.10 3.85 0.10	4.05	16.20	1.58	25.60
11	12	8	0.10 3.85 0.10	4.05	32.40	0.888	28.77
12	12	56	0.82 0.12 0.12 0.10 0.10 0.12 0.12	1.50	84.00	0.888	74.59
13	14	2	5.30	5.30	10.60	1.21	12.83
14	14	14	1.00	1.00	14.00	1.21	16.94
							981.02 Kg.

STR.11

Pos.	Φ	Nº	FORM	Unit leng	Total leng	U.W.t kg	Total weight
1	14	14	0.20 0.75 3.37 2.52 0.20 0.75	9.36	131.04	1.21	158.56
2	14	14	0.10 3.57 0.10	3.77	52.78	1.21	63.86
3	14	15	0.20 3.07 0.20	3.47	52.05	1.21	62.98
4	14	41	0.60 2.89 0.60	4.09	167.69	1.21	202.90
5	14	4	0.22 0.78 3.61~3.75 2.69~2.83 0.22 0.78	10.24	40.96	1.21	49.56
6	14	24	0.50~2.75	1.63	39.12	1.21	47.34
7	14	5	0.15 0.17 0.15 0.30 0.30 2.05	5.17	25.85	1.21	31.28
8	14	9	0.15 0.90 0.15 0.17 0.17	2.74	24.66	1.21	29.84
9	20	8	0.10 3.91 0.10	4.11	32.88	2.47	81.21
10	16	4	0.10 3.91 0.10	4.11	16.44	1.58	25.98
11	12	8	0.10 3.91 0.10	4.11	32.88	0.888	29.20
12	12	56	0.82 0.12 0.12 0.10 0.10 0.12 0.12	1.50	84.00	0.888	74.59
13	14	2	5.70	5.70	11.40	1.21	13.79
14	14	15	1.00	1.00	15.00	1.21	18.15
							889.24 Kg

REFERENCE DWGS: For reinforcement see dwg. Nº 12/4/3/01

For bars with variable unit length see note under the same title at dwg. Nº 20/2/1/01

Scale:	IRRIGATION & DRAINAGE STANDARDS	
Date:	DWG. Nº 12/4/3/03	CHECK DROP
Approved:	Sheet Nº 5 of 5 Rev. Nº	LIST OF REINFORCEMENT STR. 7 TO 11

ISLAMIC REPUBLIC OF IRAN
MINISTRY OF PLAN & BUDGET
TECHNICAL RESEARCH AND STANDARD BUREAU

omoorepeyman.ir

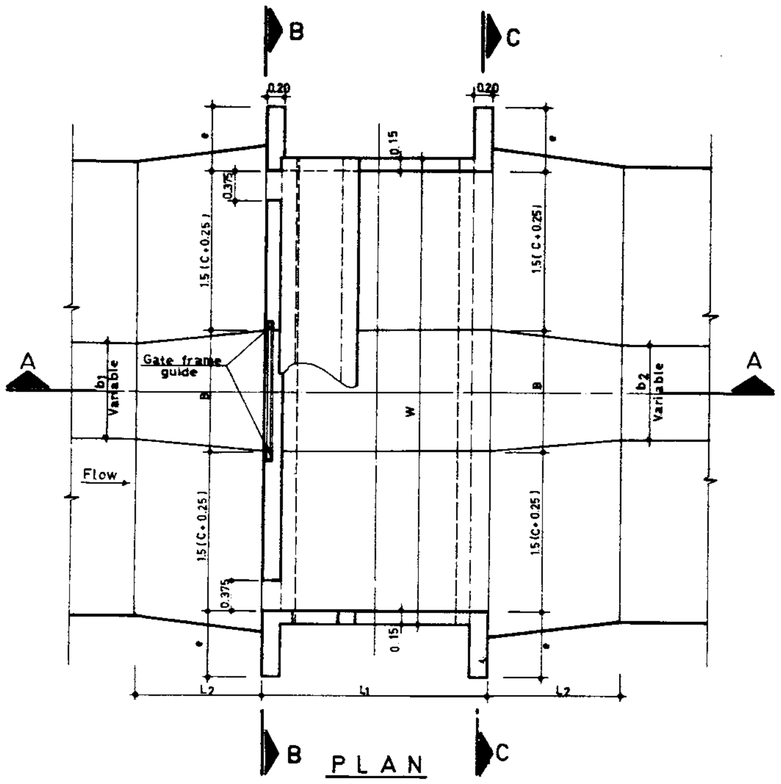

PLAN

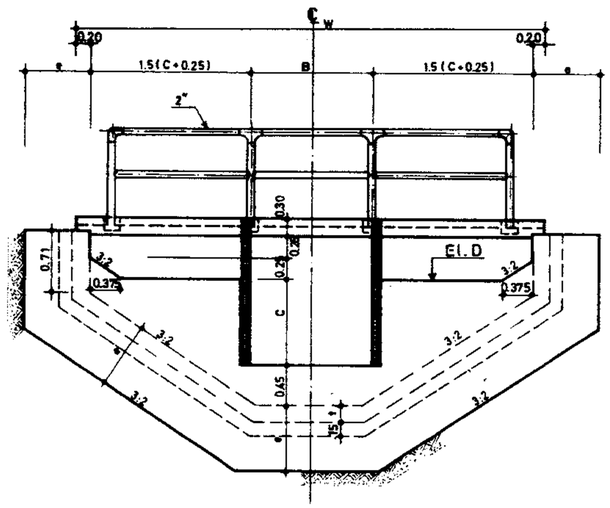

SECTION B_B

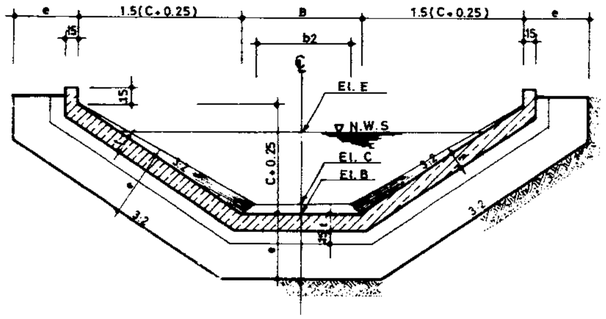

SECTION C_C

STR. #	MAX. Q m³/s	SLIDE GATE WIDTH x HEIGHT m.	FRM HT m.	B m.	C m.	L_1 m.	L_2 m.	N #	R m.	W m.	X m.	e m.	t m.	Conc m^3	R/Bar Kg	Form m^2
1	0.300	1.00x0.30	0.70	1.00	0.35	2.00	1.50	3	0.325	3.25	1.30	0.60	0.15	3.87	273.16	23.09
2	0.400	1.00x0.40	0.90	1.00	0.45	2.00	1.50	3	0.325	3.55	1.45	0.60	0.15	4.31	296.41	24.89
3	0.500	1.00x0.50	1.10	1.00	0.55	2.00	1.50	3	0.325	3.85	1.60	0.60	0.15	4.71	320.03	26.93
4	0.600	1.00x0.60	1.30	1.00	0.65	2.10	1.50	3	0.325	4.15	1.75	0.60	0.18	5.18	452.66	29.39
5	0.700	1.00x0.70	1.50	1.00	0.75	2.20	1.50	3	0.325	4.45	1.90	0.75	0.18	6.08	389.00	35.08
6	0.800	1.00x0.80	1.70	1.00	0.85	2.30	1.50	3	0.325	4.75	2.05	0.75	0.18	6.56	427.99	36.68
7	0.480	1.20x0.40	0.90	1.20	0.50	2.10	1.50	3	0.350	3.90	1.60	0.80	0.15	4.75	333.65	26.86
8	0.600	1.20x0.50	1.10	1.20	0.60	2.20	1.50	3	0.350	4.20	1.75	0.60	0.18	5.20	357.55	2e 82
9	0.720	1.20x0.60	1.30	1.20	0.70	2.30	1.50	3	0.350	4.50	1.90	0.60	0.18	5.64	395.13	30.64
10	0.840	1.20x0.70	1.50	1.20	0.80	2.40	1.50	3	0.300	4.80	1.40	0.75	0.18	6.37	433.07	37.42
11	0.960	1.20x0.80	1.70	1.20	0.90	2.50	1.50	4	0.300	5.10	1.50	0.75	0.20	7.07	498.07	39.41
12	1.080	1.20x0.90	1.90	1.20	1.00	2.60	2.00	4	0.300	5.40	1.60	0.75	0.20	7.35	539.92	42.11
13	0.700	1.40x0.50	1.10	1.40	0.60	2.20	2.00	3	0.300	4.40	1.90	0.60	0.18	5.86	372.77	29.37
14	0.840	1.40x0.60	1.30	1.40	0.70	2.30	2.00	3	0.350	4.70	2.00	0.60	0.18	5.90	407.11	31.83
15	0.980	1.40x0.70	1.50	1.40	0.80	2.40	2.00	4	0.325	5.00	1.45	0.75	0.18	6.65	449.12	38.45
16	1.120	1.40x0.80	1.70	1.40	0.90	2.50	2.00	4	0.325	5.30	1.55	0.75	0.20	7.20	518.66	40.67
17	1.260	1.40x0.90	2.00	1.40	1.00	2.60	2.00	4	0.325	5.60	1.65	0.75	0.20	7.66	[illegible]749	43.11
18	0.960	1.60x0.60	1.30	1.60	0.70	2.30	2.00	3	0.350	4.90	1.40	0.60	0.18	5.88	421.36	32.15
19	1.120	1.60x0.70	1.50	1.60	0.80	2.40	2.00	4	0.350	5.20	1.50	0.75	0.18	6.80	46386	39.45
20	1.280	1.60x0.80	1.70	1.60	0.90	2.50	2.00	4	0.350	5.50	1.60	0.75	0.20	7.49	538.54	40.90
21	1.440	1.60x0.90	2.00	1.60	1.00	2.60	2.00	4	0.350	5.80	1.70	0.75	0.20	7.94	579.91	44.11
22	1.260	1.80x0.70	1.50	1.80	0.80	2.40	2.00	4	0.300	5.40	1.60	0.75	0.18	7.22	474.51	40.72
23	1.440	1.80x0.80	1.80	1.80	0.90	2.50	2.00	4	0.300	5.70	1.70	0.75	0.20	7.77	558.41	42.67
24	1.620	1.80x0.90	2.00	1.80	1.00	2.60	2.00	4	0.300	6.00	1.80	0.75	0.20	8.26	596.70	45.11

DIMENSION TABLE

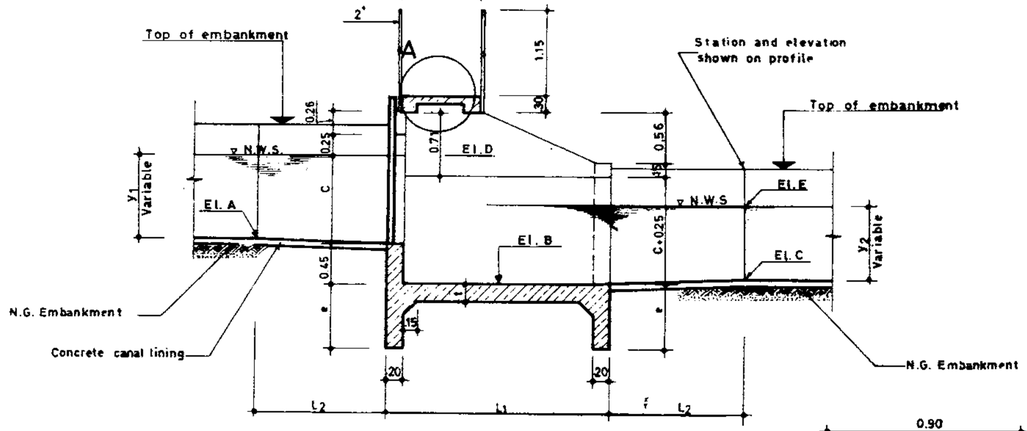

SECTION A_A

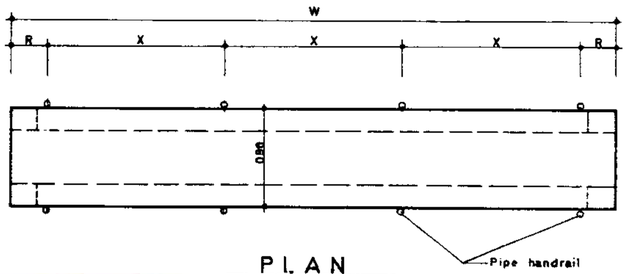

PLAN
OPERATING DECK

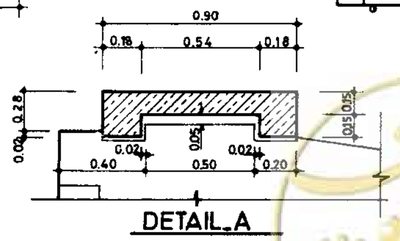

DETAIL_A

NOTES:

1. N = № of guard posts.
2. For Q greater than 1 m^3/s, upstream handrails required with a safety chain at gate opening.
3. All checks shall have continuous handrail bolted to precast conc. bolt.
4. Gate frame height measured from ℄ of gate opening.
5. For construction detail of gate frame guide see dwg. № 12/6/1/01
6. Chamfer all exposed corner 2 cm. unless otherwise shown.
7. Values of L_2 given in table are the minimum required lengths.

CHECK DROPS SELECTING PROCEDURE:

1. Determine "Q" in m^3/s in U/S canal.
2. Select the structure from "dimension table" with respect to required "Q".
3. If the required "Q" not found in the table, select the structure's dimensions with the next largest "Q".
4. El. D is equal to: El. A + y_1
5. El. B = El. D-(C+0.45)
6. El. C = El. A - required change in grade
7. Check if El. B ≤ El. C
8. If El. B is higher than El. C, a structure with a larger dimension C should be selected.

REFERENCE DWGS: For general notes and minimum requirements for detailing reinforcement see dwgs. 20/2/1/01 TO 20/2/1/03
For reinforcement see dwg. №: 12/3/3/01
For construction detail of gate frame guide see dwg. №: 12/6/1/01

Scale: N.T.S.	IRRIGATION & DRAINAGE STANDARDS	
Date.	DWG. № 12/3/1/01	45 Cm CHECK DROP (Concrete canal) Q = 300 ~ 1620 l/sec. PLAN & SECTION
Approved:	Sheet. № 1 of 6 Rev. №	

ISLAMIC REPUBLIC OF IRAN
MINISTRY OF PLAN & BUD[illegible]
TECHNICAL RESEARCH AND STANDARD BUREAU

omoorepeyman.ir

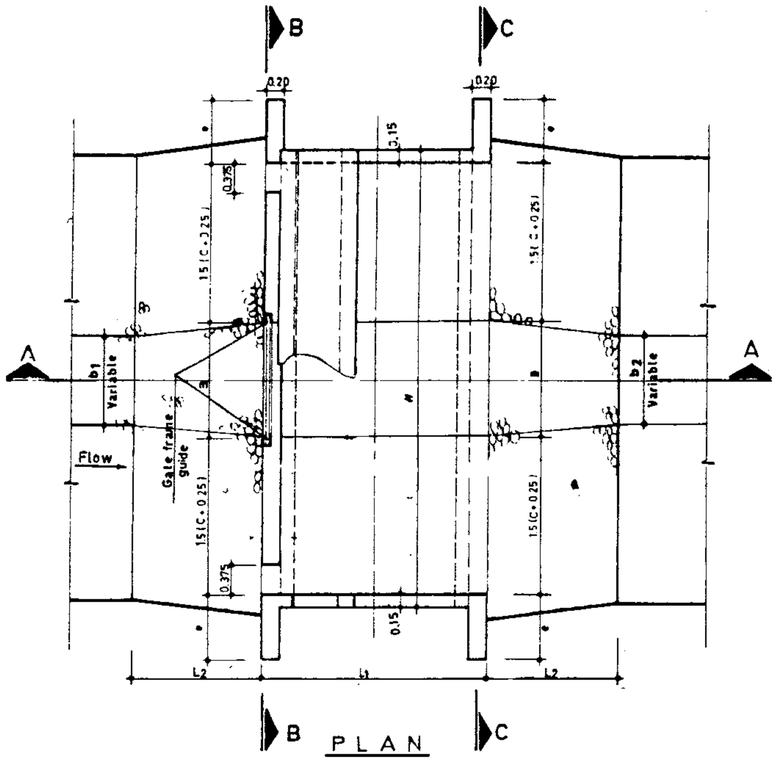

PLAN

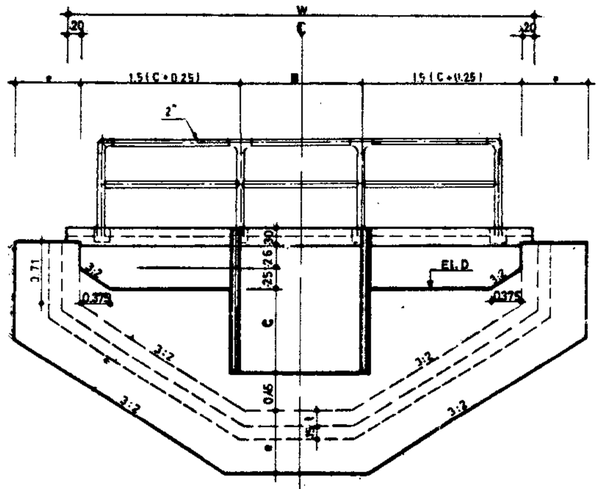

SECTION B_B

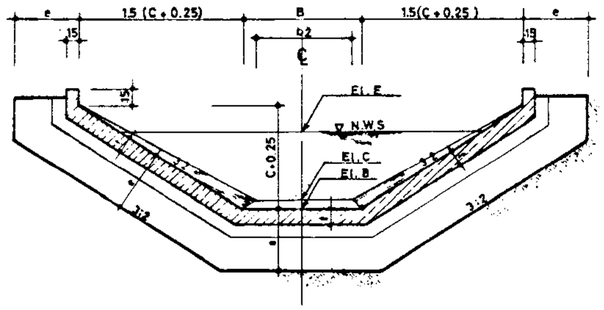

SECTION C_C

# STR	MAX Q m³/s	SLIDE GATE WIDTH x HEIGHT m.	FRM HT m	STANDARD DIMENSION B m	C m	L_1 m	L_2 m	N #	R m	W m	X m	e m	t m	Concr. m³	Bar Kg	Form m²
1	0.300	1.00×0.30	0.70	1.00	0.35	2.00	1.50	3	0.325	3.25	1.30	0.60	0.15	3.87	273.16	23.09
2	0.400	1.00×0.40	0.90	1.00	0.45	2.00	1.50	3	0.325	3.55	1.45	0.60	0.15	4.31	296.41	24.89
3	0.500	1.00×0.50	1.10	1.00	0.55	2.00	1.50	3	0.325	3.85	1.60	0.60	0.15	4.71	320.03	26.93
4	0.600	1.00×0.60	1.30	1.00	0.65	2.10	1.50	3	0.325	4.15	1.75	0.60	0.18	5.18	452.66	29.39
5	0.700	1.00×0.70	1.50	1.00	0.75	2.20	1.50	3	0.325	4.45	1.90	0.75	0.18	6.08	389.00	35.08
6	0.800	1.00×0.80	1.70	1.00	0.85	2.30	1.50	3	0.325	4.75	2.05	0.75	0.18	6.56	427.99	36.68
7	0.480	1.20×0.40	0.90	1.20	0.50	2.10	1.50	3	0.350	3.90	1.60	0.60	0.15	4.75	333.66	26.86
8	0.600	1.20×0.50	1.10	1.20	0.60	2.20	1.50	3	0.350	4.20	1.75	0.60	0.18	5.20	357.55	28.62
9	0.720	1.20×0.60	1.30	1.20	0.70	2.30	1.50	3	0.350	4.50	1.90	0.60	0.18	5.64	395.13	30.64
10	0.840	1.20×0.70	1.50	1.20	0.80	2.40	1.50	3	0.300	4.80	1.40	0.75	0.18	6.37	433.07	37.42
11	0.960	1.20×0.80	1.70	1.20	0.90	2.50	1.50	4	0.300	5.10	1.50	0.75	0.20	7.07	498.07	39.41
12	1.080	1.20×0.90	1.90	1.20	1.00	2.60	2.00	4	0.300	5.40	1.60	0.75	0.20	7.35	539.92	42.11
13	0.700	1.40×0.50	1.10	1.40	0.60	2.20	2.00	3	0.300	4.40	1.90	0.60	0.18	5.86	372.77	29.37
14	0.840	1.40×0.60	1.30	1.40	0.70	2.30	2.00	3	0.350	4.70	2.00	0.60	0.18	5.90	407.11	31.83
15	0.980	1.40×0.70	1.50	1.40	0.80	2.40	2.00	4	0.325	5.00	1.45	0.75	0.18	6.65	449.12	38.45
16	1.120	1.40×0.80	1.70	1.40	0.90	2.50	2.00	4	0.325	5.30	1.55	0.75	0.20	7.20	518.66	40.67
17	1.260	1.40×0.90	2.00	1.40	1.00	2.60	2.00	4	0.325	5.60	1.65	0.75	0.20	7.66	557.49	43.11
18	0.960	1.60×0.60	1.30	1.60	0.70	2.30	2.00	3	0.350	4.90	1.40	0.60	0.18	5.88	421.36	32.15
19	1.120	1.60×0.70	1.50	1.60	0.80	2.40	2.00	4	0.350	5.20	1.50	0.75	0.18	6.90	463.86	39.45
20	1.280	1.60×0.80	1.70	1.60	0.90	2.50	2.00	4	0.350	5.50	1.60	0.75	0.20	7.49	538.54	40.90
21	1.440	1.60×0.90	2.00	1.60	1.00	2.60	2.00	4	0.350	5.80	1.70	0.75	0.20	7.94	579.91	44.11
22	1.260	1.80×0.70	1.50	1.80	0.80	2.40	2.00	4	0.300	5.40	1.60	0.75	0.18	7.22	474.51	40.72
23	1.440	1.80×0.80	1.80	1.80	0.90	2.50	2.00	4	0.300	5.70	1.70	0.75	0.20	7.77	558.41	42.67
24	1.620	1.80×0.90	2.00	1.80	1.00	2.60	2.00	4	0.300	6.00	1.80	0.75	0.20	8.26	596.70	45.11

DIMENSION TABLE

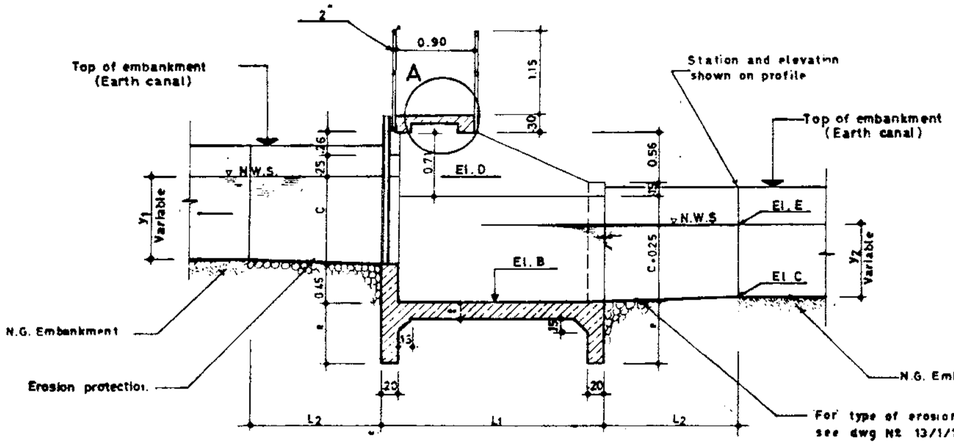

SECTION A_A

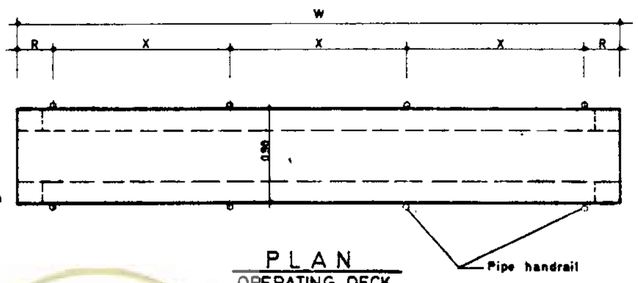

PLAN
OPERATING DECK

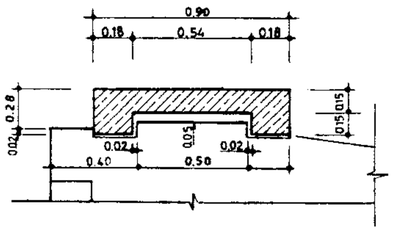

DETAIL_A

REFERENCE DWGS: For general notes and minimum requirements for detailing reinforcement see dwgs. 20/2/1/01 TO 20/2/1/09
For reinforcement see dwg Nº 12/3/3/01
See note on dwg Nº 12/3/1/01
For check drops selecting procedure see dwg Nº 12/3/1/01
For construction detail of "gate frame guide" see dwg. Nº 12/6/1/01

Scale: N.T.S.	IRRIGATION & DRAINAGE STANDARDS		
Date:	DWG. Nº 12/3/1/02		45 Cm CHECK DROP (Earth canal) Q = 300 ~ 1620 l/sec PLAN & SECTION
Approved:	Sheet Nº 2 of 6	Rev. Nº	

ISLAMIC REPUBLIC OF IRAN
MINISTRY OF PLAN & BUDGET
TECHNICAL RESEARCH AND STANDARD BUREAU

omoorepeyman.ir

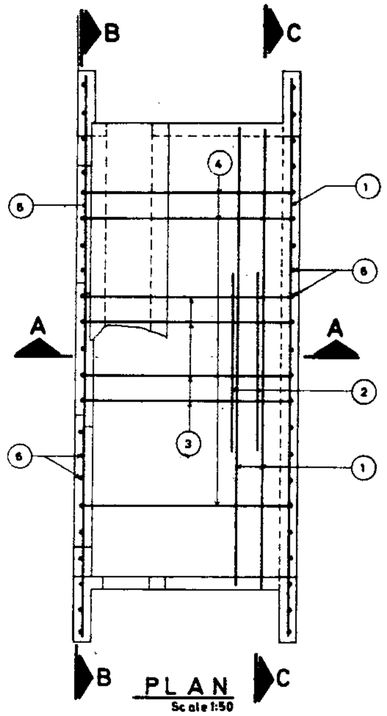

PLAN
Scale 1:50

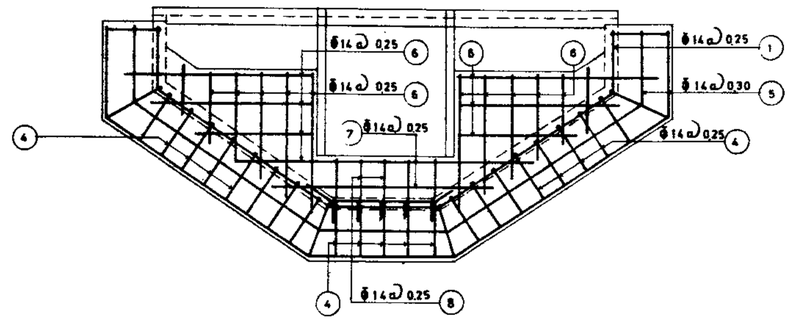

SECTION B_B
Scale 1:50

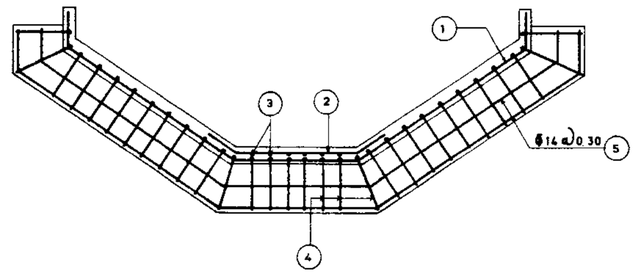

SECTION C_C
Scale 1:50

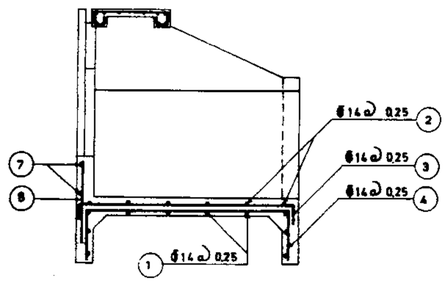

SECTION A_A
Scale 1:50

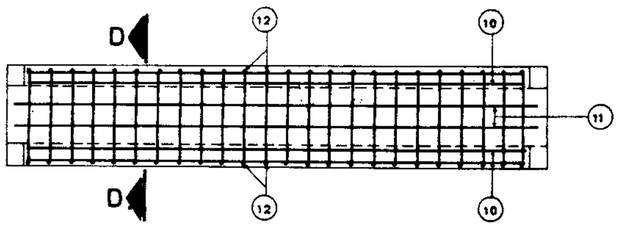

PLAN
OPERATING DECK

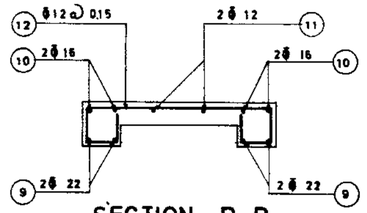

SECTION D_D
Scale 1:20

Pos. (2) and (3) are omitted when t<20 cm

REFERENCE DWGS: For detail of dimensions see dwgs. Nº 12/3/1/01 & 12/3/1/02
For reinforcement table see dwgs. Nº 12/3/3/02 TO 12/3/3/04

Scale: 1:50_1:20	IRRIGATION & DRAINAGE STANDARDS		ISLAMIC REPUBLIC OF IRAN MINISTRY OF PLAN & BUD TECHNICAL RESEARCH AND STANDARD BUREAU
Date:	DWG. Nº 12/3/3/01	CHECK DROP Q=300 ~ 1620 REINFORCEMENT PLAN & SECTION	
Approved:	Sheet Nº: 3 of 6 Rev. Nº		

@omoorepeyman.ir

STR.1

Pos	Φ	No.	FORM	Unit leng	Total leng	U.Wt. Kg.	Total weight
1	14	9	.20/.75 1.17 1.08 1.17 .20/.75	4.37	39.33	1.21	47.59
2		–		–	–	–	–
3		–		–	–	–	–
4	14	21	.45 1.83 .45	2.73	57.33	1.21	69.37
5	14	4	.22/.78 1.34~1.52 1.16~1.30 1.34~1.52 .22/.78	5.09	20.36	1.21	24.64
6	14	18	0.50~1.63	1.07	19.26	1.21	23.30
7	14	2	3.25	3.25	6.50	1.21	7.87
8	14	3	1.00	1.00	3.00	1.21	3.63
9	22	4	.10 3.17 .10	3.37	13.48	2.98	40.17
10	16	4	.10 3.17 .10	3.37	13.48	1.58	21.30
11	12	2	.10 3.17 .10	3.37	6.74	0.888	5.99
12	12	22	0.82 .22 .12 .20 .20 .12 .22	1.90	41.80	0.888	37.12
							280.98 Kg.

STR.3

Pos	Φ	No.	FORM	Unit leng	Total leng	U.Wt. Kg.	Total weight
1		9	.20/.75 1.53 1.08 1.53 .20/.75	5.09	45.81	1.21	55.43
2	–	–		–	–	–	–
3	–	–		–	–	–	–
4	14	24	.45 1.80 .45	2.70	64.80	1.21	78.41
5	14	4	.22/.78 1.70~1.88 1.16~1.30 1.70~1.88 .22/.78	5.81	23.24	1.21	28.12
6	14	22	0.50~1.93	1.22	26.84	1.21	32.48
7	14	2	3.25	3.25	6.50	1.21	7.87
8	14	3	1.00	1.00	3.00	1.21	3.63
9	22	4	.10 3.77 .10	3.97	15.88	2.98	47.32
10	16	4	.10 3.77 .10	3.97	15.88	1.58	25.09
11	12	2	.10 3.77 .10	3.97	7.94	0.888	7.05
12	12	26	0.82 .22 .12 .20 .20 .12 .22	1.90	49.40	0.888	43.87
							329.27 Kg.

STR.5

Pos	Φ	No.	FORM	Unit leng	Total leng	U.Wt. Kg.	Total weight
1	14	10	.20/.75 1.89 1.08 1.89 .20/.75	5.81	58.10	1.21	70.30
2	14	–		–	–	–	–
3	14	–		–	–	–	–
4	14	26	.57 2.03 .57	3.17	82.42	1.21	99.73
5	14	4	.22/.78 2.06~2.24 1.16~1.30 2.06~2.24 .22/.78	6.53	26.12	1.21	31.61
6	14	26	0.50~2.23	1.37	35.62	1.21	43.10
7	14	2	3.25	3.25	6.50	1.21	7.87
8	14	3	1.00	1.00	3.00	1.21	3.63
9	22	4	.10 4.37 .10	4.57	18.28	2.98	54.47
10	16	4	.10 4.37 .10	4.57	18.28	1.58	28.88
11	12	2	.10 4.37 .10	4.57	9.14	0.888	8.12
12	12	31	0.82 .22 .12 .20 .20 .12 .22	1.90	58.90	0.888	52.30
							400.01 Kg.

STR.7

Pos	Φ	No.	FORM	Unit leng	Total leng	U.Wt. Kg.	Total weight
1	14	10	.20/.75 1.44 1.28 1.44 .20/.75	5.11	51.10	1.21	61.83
2	–	–		–	–	–	–
3	–	–		–	–	–	–
4	14	24	.45 1.93 .45	2.83	67.92	1.21	82.18
5	14	4	.22/.78 1.61~1.79 1.36~1.50 1.61~1.79 .22/.78	5.83	29.15	1.21	35.27
6	14	22	0.50~1.35	0.93	20.46	1.21	24.76
7	14	2	3.45	3.45	6.90	1.21	8.35
8	14	4	1.00	1.00	4.00	1.21	4.84
9	22	4	.10 3.82 .10	4.02	16.08	2.98	47.92
10	16	4	.10 3.82 .10	4.02	16.08	1.58	25.41
11	12	2	.10 3.82 .10	4.02	8.04	0.888	7.14
12	12	27	0.82 .22 .12 .20 .20 .12 .22	1.90	51.30	0.888	45.55
							343.25 Kg.

STR.2

Pos	Φ	No.	FORM	Unit leng	Total leng	U.Wt. Kg.	Total weight
1	14	9	.20/.75 1.35 1.08 1.35 .20/.75	4.73	42.57	1.21	51.51
2	–	–		–	–	–	–
3	–	–		–	–	–	–
4	14	22	.45 1.83 .45	2.73	60.06	1.21	72.67
5	14	4	.22/.78 1.52~1.70 1.16~1.30 1.52~1.70 .22/.78	5.45	21.80	1.21	26.38
6	14	20	0.50~1.78	1.14	22.80	1.21	27.59
7	14	2	3.25	3.25	6.50	1.21	7.87
8	14	3	1.00	1.00	3.00	1.21	3.63
9	22	4	.10 3.47 .10	3.67	14.68	2.98	43.75
10	16	4	.10 3.47 .10	3.67	14.68	1.58	23.19
11	12	2	.10 3.47 .10	3.67	7.34	0.888	6.52
12	12	25	0.82 .22 .12 .20 .20 .12 .22	1.90	47.50	0.888	42.18
							305.29 Kg.

STR.4

Pos	Φ	No.	FORM	Unit leng	Total leng	U.Wt. Kg.	Total weight
1	14	10	.20/.75 1.71 1.08 1.71 .20/.75	5.45	54.50	1.21	65.95
2	–	–		–	–	–	–
3	–	–		–	–	–	–
4	14	25	.42 1.93 .42	2.77	69.25	1.21	83.79
5	14	4	.22/.78 1.88~2.06 1.16~1.30 1.88~2.06 .22/.78	6.17	24.68	1.21	29.86
6	14	24	0.50~2.08	1.29	30.96	1.21	37.46
7	14	2	3.25	3.25	6.50	1.21	7.87
8	14	3	1.00	1.00	3.00	1.21	3.63
9	22	4	.10 4.07 .10	4.27	17.08	2.98	50.90
10	16	4	.10 4.07 .10	4.27	17.08	1.58	26.99
11	12	2	.10 4.07 .10	4.27	8.54	0.888	7.58
12	12	29	0.82 .22 .12 .20 .20 .12 .22	1.90	55.10	0.888	48.93
							462.96 Kg.

STR.6

Pos	Φ	No.	FORM.	Unit leng	Total leng	U.Wt. Kg.	Total weight
1	14	11	.20/.75 2.07 1.08 2.07 .20/.75	6.17	67.87	1.21	82.12
2	–	–		–	–	–	–
3	–	–		–	–	–	–
4	14	28	.57 2.13 .57	3.27	91.56	1.21	110.79
5	14	4	.22/.78 2.31~2.49 1.16~1.30 2.31~2.49 .22/.78	6.89	27.56	1.21	33.35
6	14	28	0.50~2.38	1.44	40.32	1.21	48.79
7	14	2	3.25	3.25	6.50	1.21	7.87
8	14	3	1.00	1.00	3.00	1.21	3.63
9	22	4	.10 4.67 .10	4.87	19.48	2.98	58.05
10	16	4	.10 4.67 .10	4.87	19.48	1.58	30.78
11	12	2	.10 4.67 .10	4.87	9.74	0.888	8.65
12	12	33	0.82 .22 .12 .20 .20 .12 .22	1.90	62.70	0.888	55.68
							439.71 Kg.

STR.8

Pos	Φ	No.	FORM	Unit leng	Total leng	U.Wt. Kg.	Total weight
1	14	10	.20/.75 1.62 1.28 1.62 .20/.75	5.47	54.70	1.21	66.19
2	–	–		–	–	–	–
3	–	–		–	–	–	–
4	14	25	.42 2.03 .42	2.87	71.75	1.21	86.82
5	14	4	.22/.78 1.79~1.97 1.36~1.50 1.79~1.97 .22/.78	6.19	24.76	1.21	29.96
6	14	24	0.50~2.00	1.25	30.00	1.21	36.30
7	14	2	3.45	3.45	6.90	1.21	8.35
8	14	4	1.00	1.00	4.00	1.21	4.84
9	22	4	.10 4.12 .10	4.32	17.28	2.98	51.49
10	16	4	.10 4.12 .10	4.32	17.28	1.58	27.30
11	12	2	.10 4.12 .10	4.32	8.64	0.888	7.67
12	12	29	0.82 .22 .12 .20 .20 .12 .22	1.90	55.10	0.888	48.93
							367.85 Kg.

REFERENCE DWGS: For reinforcement see dwg. No 12/3/3/01

For bars with variable unit length see note under the same title at dwg. No 20/2/1/01

Scale:

Date:

Approved:

IRRIGATION & DRAINAGE STANDARDS

DWG. No 12/3/3/02

Sheet. No: 4 of 6 Rev. No

CHECK DROP
LIST OF REINFORCEMENT
STR. 1 TO 8

ISLAMIC REPUBLIC OF IRAN
MINISTRY OF PLAN & BUD...
TECHNICAL RESEARCH AND STANDARD BUREAU

@omoorepeyman.ir

STR.9

Pos.	Φ	No.	FORM	Unit leng	Total leng	U.Wt. Kg.	Total weight
1	14	11	.20 .75 1.90 1.28 1.90 .20 .75	5.83	64.13	1.21	77.60
2	–	–		–	–	–	–
3	–	–		–	–	–	–
4	14	27	2.13 .42 .42	2.97	80.19	1.21	97.03
5	14	4	.22 .78 1.97~2.15 1.36 1.50 1.97~2.15 .22 .78	6.55	26.20	1.21	31.70
6	14	26	0.50~2.15	1.33	34.58	1.21	41.84
7	14	2	3.45	3.45	6.90	1.21	8.35
8	14	4	1.00	1.00	4.00	1.21	4.84
9	22	4	.10 4.42 .10	4.62	18.48	2.98	55.07
10	16	4	4.42 .10 .10	4.62	18.48	1.58	29.20
11	12	2	4.42 .10 .10	4.62	9.24	0.888	8.21
12	12	31	0.82 .22 .12 .20 .20 .12 .22	1.90	58.90	0.888	52.30
							406.14 Kg.

STR.11

Pos.	Φ	No.	FORM	Unit leng	Total leng	U.Wt. Kg.	Total weight
1	14	11	.20 .75 2.18 1.28 2.18 .20 .75	6.55	72.05	1.21	87.18
2	14	11	0.10 1.68 0.10	1.68	18.48	1.21	22.36
3	14	6	0.82~2.33 .20 .20	1.98	11.88	1.21	14.37
4	14	29	2.33 .55 .55	3.43	99.47	1.21	120.36
5	14	4	.22 .78 2.33~2.51 1.36~1.50 2.33~2.51 .22 .78	7.27	29.08	1.21	35.19
6	14	30	0.50~2.45	1.48	4440	1.21	53.72
7	14	2	3.45	3.45	6.90	1.21	8.35
8	14	4	1.00	1.00	4.00	1.21	4.48
9	22	4	.10 5.02 .10	5.25	21.00	2.98	62.58
10	16	4	5.02 .10 .10	5.25	21.00	1.58	33.18
11	12	2	5.02 .10 .10	5.25	10.50	0.888	9.32
12	12	35	0.82 .22 .12 .20 .20 .12 .22	1.90	66.50	0.888	59.05
							510.50 Kg.

STR.13

Pos.	Φ	No.	FORM	Unit leng	Total leng	U.Wt. Kg.	Total weight
1	14	10	.20 .75 1.62 1.48 1.62 .20 .75	5.67	56.70	1.21	68.61
2	–	–		–	–	–	–
3	–	–		–	–	–	–
4	14	26	2.03 .42 .42	2.87	74.62	1.21	90.29
5	14	4	.22 .78 1.79~1.97 1.56~1.70 1.79~1.97 .22 .78	6.39	25.56	1.21	30.93
6	14	24	0.50~2.00	1.25	30.00	1.21	36.30
7	14	2	3.65	3.65	7.30	1.21	8.83
8	14	5	1.00	1.00	5.00	1.21	6.05
9	22	4	.10 4.32 .10	4.52	18.08	2.98	53.88
10	16	4	4.32 .10 .10	4.52	18.08	1.58	28.57
11	12	2	4.32 .10 .10	4.52	9.04	0.888	8.03
12	12	31	0.82 .22 .12 .20 .20 .12 .22	1.90	58.90	0.888	52.30
							383.78 Kg.

STR.15

Pos.	Φ	No.	FORM	Unit leng	Total leng	U.Wt. Kg.	Total weight
1	14	11	.20 .75 1.98 1.48 1.98 .20 .75	6.39	70.29	1.21	85.05
2	–	–		–	–	–	–
3	–	–		–	–	–	–
4	14	29	2.23 .57 .57	3.37	97.73	1.21	118.25
5	14	4	.22 .78 2.15~2.33 1.56~1.70 2.15~2.33 .22 .78	7.11	28.44	1.21	34.41
6	14	28	0.50~2.30	1.40	39.20	1.21	47.43
7	14	2	3.65	3.65	7.30	1.21	8.83
8	14	5	1.00	1.00	5.00	1.21	6.05
9	22	4	.10 4.92 .10	5.12	20.48	2.98	61.03
10	16	4	4.92 .10 .10	5.12	20.48	1.58	32.36
11	12	2	4.92 .10 .10	5.12	10.24	0.888	9.90
12	12	35	0.82 .22 .12 .20 .20 .12 .22	1.90	66.50	0.888	59.05
							461.55 Kg.

STR.10

Pos.	Φ	No.	FORM	Unit leng	Total leng	U.Wt. Kg.	Total weight
1	14	11	.20 .75 1.98 1.28 1.98 .20 .75	6.19	68.09	1.21	82.39
2	–	–		–	–	–	–
3	–	–		–	–	–	–
4	14	28	2.23 .57 .57	3.37	94.36	1.21	114.18
5	14	4	.22 .78 2.15~2.33 1.36~1.50 2.15~2.33 .22 .78	6.91	27.64	1.21	33.44
6	14	28	0.50~2.30	1.40	39.20	1.21	47.43
7	14	2	3.45	3.45	6.90	1.21	8.35
8	14	4	1.00	1.00	4.00	1.21	4.84
9	22	4	.10 4.72 .10	4.92	19.68	2.98	58.65
10	16	4	4.72 .10 .10	4.92	19.68	1.58	31.09
11	12	2	4.72 .10 .10	4.92	9.84	0.888	8.74
12	12	33	0.82 .22 .12 .20 .20 .12 .22	1.90	62.70	0.888	55.68
							444.79 Kg.

STR.12

Pos.	Φ	No.	FORM	Unit leng	Total leng	U.Wt. Kg.	Total weight
1	14	12	.20 .75 2.36 1.28 2.36 .20 .75	6.91	82.92	1.21	100.33
2	14	12	0.10 1.68 0.10	1.68	20.16	1.21	24.39
3	14	6	0.82~2.43 .20 .20	2.03	12.18	1.21	14.74
4	14	31	2.43 .55 .55	3.53	109.43	1.21	132.41
5	14	4	.22 .78 2.51~2.69 1.36~1.50 2.51~2.69 .22 .78	7.63	30.52	1.21	36.93
6	14	31	0.50~2.60	1.55	48.05	1.21	58.14
7	14	2	3.45	3.45	6.90	1.21	8.35
8	14	4	1.00	1.00	4.00	1.21	4.84
9	22	4	.10 5.32 .10	5.52	22.08	2.98	65.80
10	16	4	5.32 .10 .10	5.52	22.08	1.58	34.89
11	12	2	5.32 .10 .10	5.52	11.04	0.888	9.80
12	12	37	0.82 .22 .12 .20 .20 .12 .22	1.90	70.30	0.888	62.43
							553.05 Kg.

STR.14

Pos.	Φ	No.	FORM	Unit leng	Total leng	U.Wt. Kg.	Total weight
1	14	11	.20 .75 1.80 1.48 1.80 .20 .75	6.03	66.33	1.21	80.26
2	–	–		–	–	–	–
3	–	–		–	–	–	–
4	14	27	2.13 .42 .42	2.97	80.19	1.21	97.03
5	14	4	.22 .78 1.92~2.15 1.56~1.70 1.92~2.15 .22 .78	6.75	27.00	1.21	32.67
6	14	26	0.50~2.15	1.33	34.58	1.21	41.84
7	14	2	3.65	3.65	7.30	1.21	8.83
8	14	5	1.00	1.00	5.00	1.21	6.05
9	22	4	.10 4.82 .10	4.82	19.28	2.98	57.45
10	16	4	4.82 .10 .10	4.82	19.28	1.58	30.46
11	12	2	4.82 .10 .10	4.82	9.64	0.888	8.56
12	12	33	0.82 .22 .12 .20 .20 .12 .22	1.90	62.70	0.888	55.68
							418.83 Kg.

STR.16

Pos.	Φ	No.	FORM	Unit leng	Total leng	U.Wt. Kg.	Total weight
1	14	11	.20 .75 2.16 1.48 2.16 .20 .75	6.75	74.25	1.21	89.84
2	14	11	0.10 1.88 0.10	1.88	20.68	1.21	25.02
3	14	7	0.82~2.33 .20 .20	1.98	13.86	1.21	16.77
4	14	30	2.33 .55 .55	3.43	102.90	1.21	124.51
5	14	4	.22 .78 2.33~2.51 1.56~1.70 2.33~2.51 .22 .78	7.47	29.88	1.21	36.15
6	14	30	0.50~2.45	1.48	44.40	1.21	53.72
7	14	2	3.65	3.65	7.30	1.21	8.83
8	14	5	1.00	1.00	5.00	1.21	6.05
9	22	4	.10 5.22 .10	5.42	21.68	2.98	64.61
10	16	4	5.22 .10 .10	5.42	21.68	1.58	34.25
11	12	2	5.22 .10 .10	5.42	10.84	0.888	9.63
12	12	37	0.82 .22 .12 .20 .20 .12 .22	1.90	70.30	0.888	62.43
							531.81 Kg.

REFERENCE DWGS: For reinforcement see dwg. No 12/3/3/01

For bars ... variable unit length see note under the same title at dwg. No 20/2/1/01

Scale

Date:

Approved:

IRRIGATION & DRAINAGE STANDARDS

DWG. No 12/3/3/03

Sheet. No: 5 of 6 Rev. No

CHECK DROP

LIST OF REINFORCEMENT

STR. 9 TO 16

ISLAMIC REPUBLIC OF IRAN

MINISTRY OF PLAN & BUDGET

TECHNICAL RESEARCH AND STANDARD BUREAU

omoorepeyman.ir

STR.17

Pos.	Φ	No.	FORM	Unit leng	Total leng	U.Wt. Kg.	Total weight
1	14	12	.20 .75 2.34 1.48 2.34 .20 .75	7.11	85.32	1.21	103.24
2	14	12	.10 1.68 .10	1.88	22.56	1.21	27.30
3	14	7	0.82~2.43 .20 .20	2.03	14.21	1.21	17.19
4	14	32	2.43 .55 .55	3.53	112.96	1.21	136.68
5	14	4	.22 .78 2.51~2.69 1.56~1.70 2.51~2.69 .22 .78	7.83	31.32	1.21	37.90
6	14	30	0.50~2.60	1.55	46.50	1.21	56.27
7	14	2	2.65	2.65	5.30	1.21	6.41
8	14	5	1.00	1.00	5.00	1.21	6.05
9	22	4	.10 5.52 .10	5.72	22.88	2.98	68.18
10	16	4	.10 5.52 .10	5.72	22.88	1.58	36.15
11	12	2	.10 5.52 .10	5.72	11.44	0.888	10.16
12	12	39	0.82 .22 .12 .20 .20 .12 .22	1.90	74.10	0.888	65.80
							571.34 Kg.

STR.19

Pos.	Φ	No.	FORM	Unit Leng	Total leng	U.Wt. Kg.	Total weight
1	14	11	.20 .75 1.98 1.68 1.98 .20 .75	6.59	72.49	1.21	87.71
2	–	–		–	–	–	–
3	–	–		–	–	–	–
4	14	30	2.33 .57 .57	3.37	101.10	1.21	122.33
5	14	4	.22 .78 2.15~2.33 1.76~1.90 2.15~2.33 .22 .78	7.31	29.24	1.21	35.38
6	14	28	0.50~2.30	1.40	39.20	1.21	47.43
7	14	2	3.85	3.85	7.70	1.21	9.32
8	14	6	1.00	1.00	6.00	1.21	7.26
9	22	4	.10 5.12 .10	5.32	21.28	2.98	63.41
10	16	4	.10 5.12 .10	5.32	21.28	1.58	33.62
11	12	2	.10 5.12 .10	5.32	10.64	0.888	9.45
12	12	36	0.82 .22 .12 .20 .20 .12 .22	1.90	68.40	0.888	60.74
							476.65 Kg.

STR.21

Pos.	Φ	No.	FORM	Unit leng	Total leng	U.Wt. Kg.	Total weight
1	14	12	.20 .75 2.34 1.68 2.34 .20 .75	7.31	87.72	1.21	106.14
2	14	12	.10 1.88 .10	2.08	24.96	1.21	30.20
3	14	8	0.82~2.43 .20 .20	2.03	16.24	1.21	19.65
4	14	32	2.43 .55 .55	3.53	112.96	1.21	136.68
5	14	4	.22 .78 2.51~2.69 1.76~1.90 2.51~2.69 .22 .78	8.03	32.12	1.21	38.87
6	14	32	0.50~2.60	1.55	49.60	1.21	60.02
7	14	2	3.85	3.85	7.70	1.21	9.32
8	14	6	1.00	1.00	6.00	1.21	7.26
9	22	4	.10 5.72 .10	5.92	23.68	2.98	70.57
10	16	4	.10 5.72 .10	5.92	23.68	1.58	37.41
11	12	2	.10 5.72 .10	5.92	11.84	0.888	10.51
12	12	40	0.82 .22 .12 .20 .20 .12 .22	1.90	76.00	0.888	67.49
							594.12 Kg.

STR.23

Pos.	Φ	No.	FORM	Unit leng	Total leng	U.Wt. Kg.	Total weight
1	14	11	.20 .75 2.16 1.88 2.16 .20 .75	7.15	78.65	1.21	95.17
2	14	11	.10 2.08 .10	2.28	25.08	1.21	30.35
3	14	9	0.82~2.33 .20 .20	1.98	17.82	1.21	21.56
4	14	32	2.33 .55 .55	3.43	109.76	1.21	132.81
5	14	4	.22 .78 2.33~2.51 1.96~2.10 2.33~2.51 .22 .78	7.87	31.48	1.21	38.09
6	14	30	0.50~2.45	1.48	44.40	1.21	53.72
7	14	2	4.05	4.05	8.10	1.21	9.80
8	14	7	1.00	1.00	7.00	1.21	8.47
9	22	4	.10 5.62 .10	5.82	23.28	2.98	69.37
10	16	4	.10 5.62 .10	5.82	23.28	1.58	36.78
11	12	4	.10 5.62 .10	5.82	11.64	0.888	10.34
12	12	39	0.82 .22 .12 .20 .20 .12 .22	1.90	74.10	0.888	65.80
							572.26 Kg.

STR.18

Pos.	Φ	No.	FORM	Unit leng	Total leng	U.Wt. Kg.	Total weight
1	14	11	.20 .75 1.80 1.68 1.80 .20 .75	6.23	68.53	1.21	82.92
2	–	–		–	–	–	–
3	–	–		–	–	–	–
4	14	28	2.13 .42 .42	2.97	83.16	1.21	100.62
5	14	4	.22 .78 1.97~2.15 1.76~1.90 1.97~2.15 .22 .78	6.95	27.80	1.21	33.64
6	14	26	0.50~2.15	1.33	34.58	1.21	41.84
7	14	2	3.85	3.85	7.70	1.21	9.32
8	14	6	1.00	1.00	6.00	1.21	7.26
9	22	4	.10 4.82 .10	5.02	20.08	2.98	59.84
10	16	4	.10 4.82 .10	5.02	20.08	1.58	31.73
11	12	2	.10 4.82 .10	5.02	10.04	0.888	8.92
12	12	34	0.82 .22 .12 .20 .20 .12 .22	1.90	64.60	0.888	57.36
							433.43 Kg.

STR.20

Pos.	Φ	No.	FORM	Unit leng	Total leng	U.Wt. Kg.	Total weight
1	14	11	.20 .75 2.16 1.68 2.16 .20 .75	6.95	76.45	1.21	92.50
2	14	11	10 1.88 10	2.08	22.88	1.21	27.68
3	14	8	0.82~2.33 .20 .20	1.98	15.84	1.21	19.17
4	14	31	2.33 .55 .55	3.43	106.33	1.21	128.66
5	14	4	.22 .78 2.33~2.51 1.76~1.90 2.33~2.51 .22 .78	7.67	30.68	1.21	37.12
6	14	30	0.50~2.45	1.48	44.40	1.21	53.72
7	14	2	3.85	3.85	7.70	1.21	9.32
8	14	6	1.00	1.00	6.00	1.21	7.26
9	22	4	.10 5.42 .10	5.62	22.48	2.98	66.99
10	16	4	.10 5.42 .10	5.62	22.48	1.58	35.52
11	12	2	.10 5.42 .10	5.62	11.24	0.888	9.98
12	12	38	0.82 .22 .12 .20 .20 .12 .22	1.90	72.20	0.888	64.11
							552.03 Kg.

STR.22

Pos.	Φ	No.	FORM	Unit leng	Total leng	U.Wt. Kg.	Total weight
1	14	11	.20 .75 1.98 1.88 1.98 .20 .75	6.79	74.69	1.21	90.37
2	–	–		–	–	–	–
3	–	–		–	–	–	–
4	14	30	2.23 .57 .57	3.37	101.10	1.21	122.33
5	14	4	.22 .78 2.15~2.33 1.96~2.10 2.15~2.33 .22 .78	7.51	30.04	1.21	36.35
6	14	28	0.50~2.30	1.40	39.20	1.21	47.43
7	14	2	4.05	4.05	8.10	1.21	9.80
8	14	7	1.00	1.00	7.00	1.21	8.47
9	22	4	.10 5.32 .10	5.52	22.08	2.98	65.80
10	16	4	.10 5.32 .10	5.52	22.08	1.58	34.89
11	12	2	.10 5.32 .10	5.52	11.04	0.888	9.80
12	12	37	0.82 .22 .12 .20 .20 .12 .22	1.90	70.30	0.888	62.43
							487.66 Kg.

STR.24

Pos.	Φ	No.	FORM	Unit leng	Total leng	U.Wt. Kg.	Total weight
1	14	12	.20 .75 2.34 1.88 2.34 .20 .75	7.51	90.12	1.21	109.05
2	14	12	.10 2.08 .10	2.28	27.36	1.21	33.11
3	14	9	0.82~2.43 .20 .20	2.03	18.27	1.21	22.11
4	14	33	2.43 .55 .55	3.53	116.49	1.21	140.95
5	14	4	.22 .78 2.51~2.69 1.96~2.10 2.51~2.69 .22 .78	8.23	32.92	1.21	39.83
6	14	30	0.50~2.60	1.55	46.50	1.21	56.27
7	14	2	4.05	4.05	8.10	1.21	9.80
8	14	7	1.00	1.00	7.00	1.21	8.47
9	22	4	.10 5.92 .10	6.12	24.48	2.98	72.95
10	16	4	.10 5.92 .10	6.12	24.48	1.58	38.68
11	12	2	.10 5.92 .10	6.12	12.24	0.888	10.87
12	12	41	0.82 .22 .12 .20 .20 .12 .22	1.90	77.90	0.888	69.18
							611.27 Kg.

REFERENCE DWGS: For reinforcement see dwg. No 12/3/3/01

For bars with variable unit length see note under the same title at dwg. No 20/2/1/01

Scale:	IRRIGATION & DRAINAGE STANDARDS	
Date:	DWG. No 12/3/3/04	CHECK DROP LIST OF REINFORCEMENT STR. 17 TO 24
Approved:	Sheet No: 6 of 6 Rev.No	

ISLAMIC REPUBLIC OF IRAN
MINISTRY OF PLAN & BUDGET
TECHNICAL RESEARCH AND STANDARD BUREAU

omoorepeyman.ir

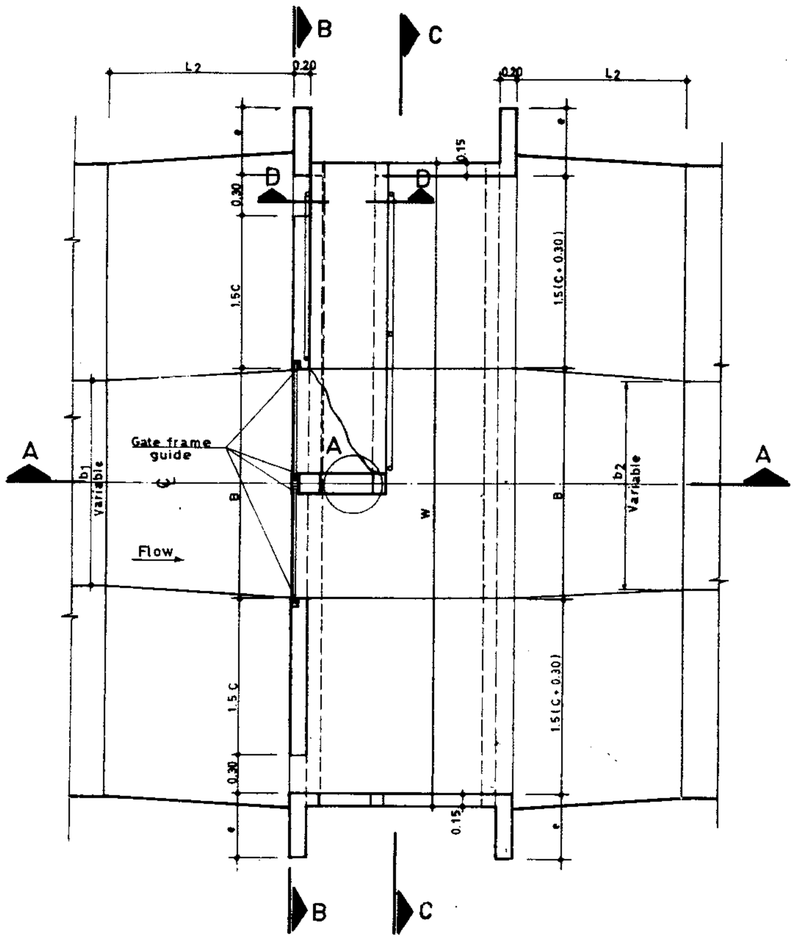

PLAN

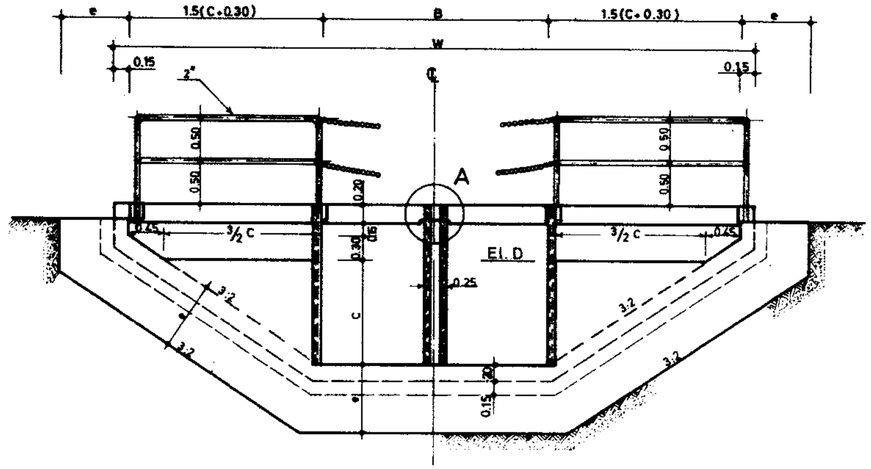

SECTION B.B.

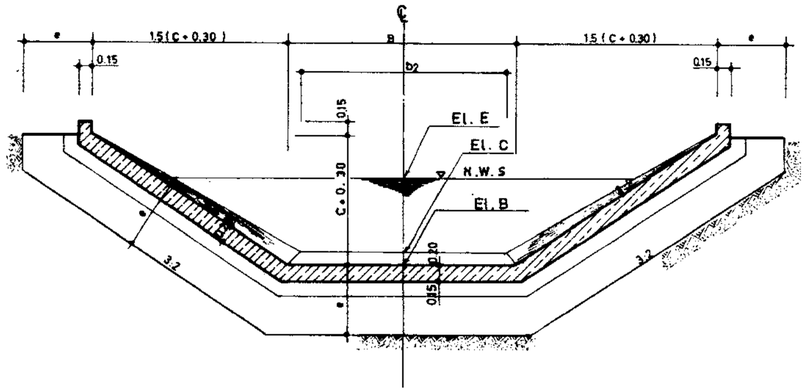

SECTION C.C.

STR. #	MAX. Q m³/s	SLIDE GATE WIDTH x HEIGHT m.	FRM HT. m.	STANDARD DIMENSION B m.	C m.	L_1 m.	L_2 m.	N #	R m.	W m.	X m.	e m.	Conc m³	R/Bar Kg.	Form m2
1	1.600	1.00 x 0.80	1.70	2.25	0.85	2.10	2.00	5	0.300	6.00	1.35	0.75	7.62	512.69	31.90
2	1.800	1.00 x 0.90	1.80	2.25	0.95	2.20	2.50	5	0.350	6.30	1.40	0.75	8.07	540.63	33.47
3	2.000	1.00 x 1.00	2.20	2.25	1.05	2.30	2.50	5	0.300	6.60	1.50	0.75	8.59	588.54	36.79
4	2.200	1.00 x 1.10	2.40	2.25	1.15	2.40	2.50	6	0.325	6.90	1.25	0.75	8.95	618.34	37.94
5	2.160	1.20 x 0.90	1.90	2.65	1.00	2.20	2.50	6	0.300	6.85	1.25	0.75	8.68	591.39	37.18
6	2.400	1.20 x 1.00	2.10	2.65	1.10	2.30	2.50	6	0.325	7.15	1.30	0.75	9.20	634.06	39.79
7	2.640	1.20 x 1.10	2.40	2.65	1.20	2.40	2.50	6	0.350	7.40	1.35	0.75	9.71	668.07	42.50
8	2.520	1.40 x 0.90	2.00	3.05	1.00	2.30	2.50	6	0.375	7.25	1.30	0.75	9.28	643.90	38.86
9	2.800	1.40 x 1.00	2.20	3.05	1.10	2.40	3.00	6	0.275	7.55	1.40	0.75	9.80	678.13	41.47
10	3.080	1.40 x 1.10	2.40	3.05	1.20	2.50	3.00	6	0.300	7.85	1.45	0.75	10.38	710.06	44.16
11	3.200	1.60 x 1.00	2.20	3.45	1.10	2.40	3.00	6	0.350	7.95	1.45	0.75	10.35	711.01	43.07

DIMENSION TABLE

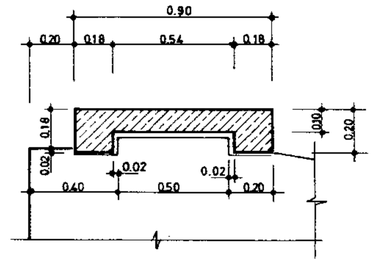

DETAIL B

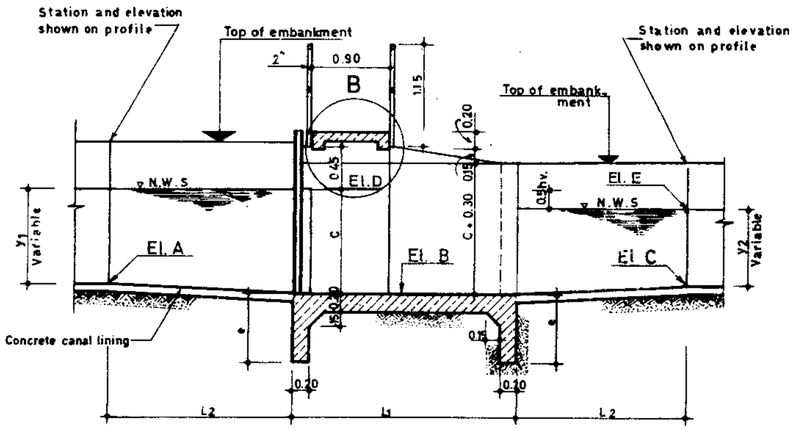

SECTION A.A.

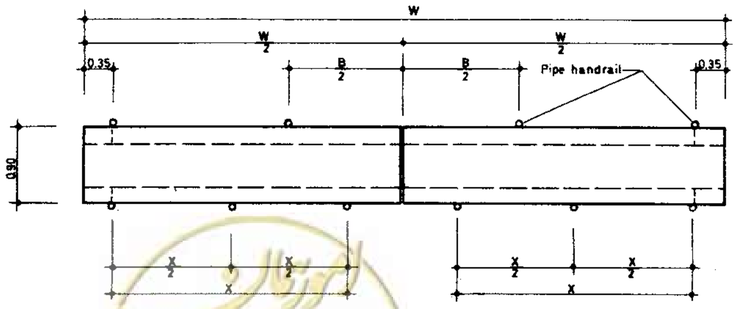

PLAN
OPERATING DECK

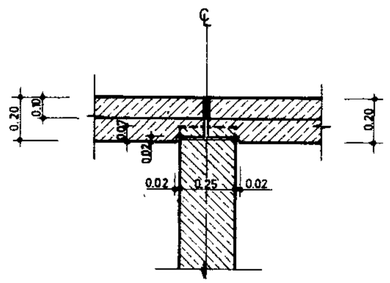

DETAIL A

REFERENCE DWGS: For general notes and minimum requirements for detailing reinforcement see dwgs. Nº 20/2/1/01 TO 20/2/1/03
For reinforcement & section D_D see dwg Nº 12/2/3/01
For notes & check structure selecting procedure, see dwg. N° 12/1/1/01
For construction detail of "gate frame guide" see dwg. Nº 12/6/1/01

Scale: N.T.S.	IRRIGATION & DRAINAGE STANDARDS	
Date:	DWG. Nº 12/2/1/01	CHECK STRUCTURES (Concrete canal) Q = 1600 ~ 3200 l/sec. PLAN & SECTION
Approved:	Sheet Nº 1 of 5 Rev. Nº	

ISLAMIC REPUBLIC OF IRAN
MINISTRY OF PLAN & BUDGET
TECHNICAL RESEARCH AND STANDARD BUREAU

@omoorepeyman.ir

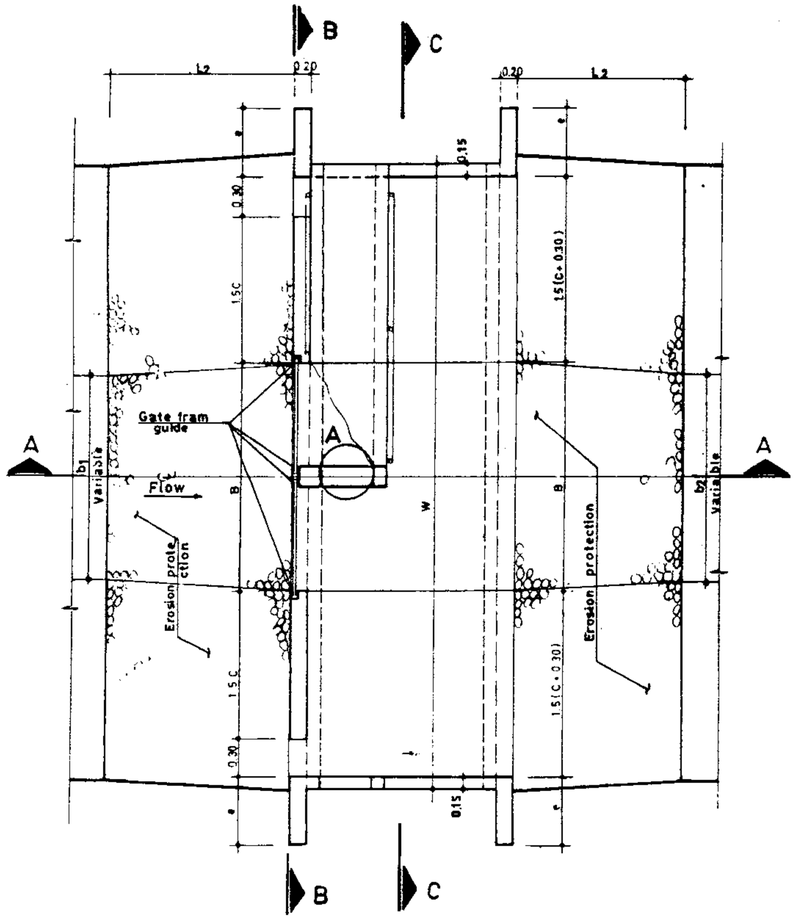

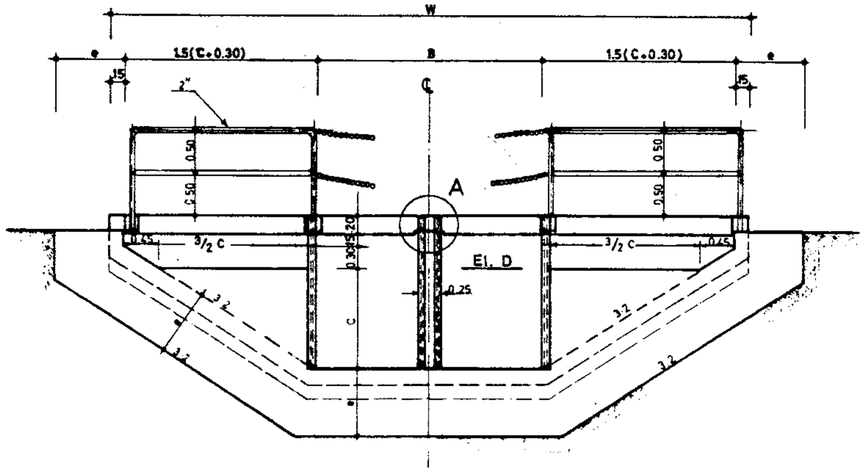

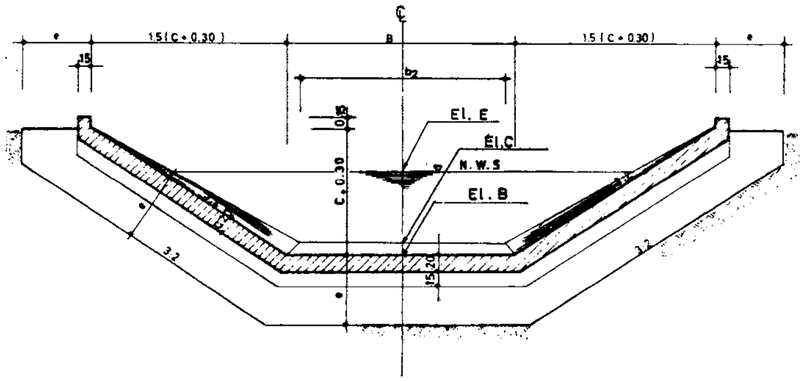

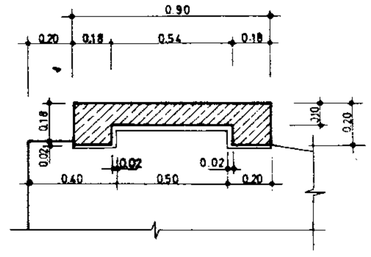

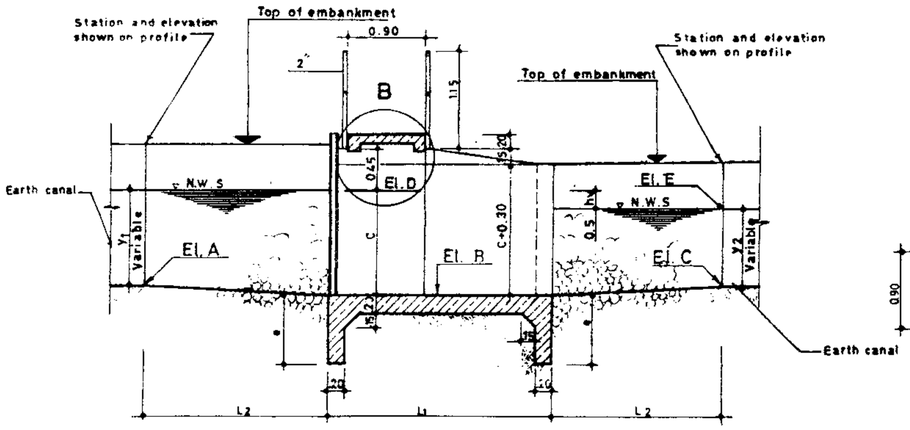

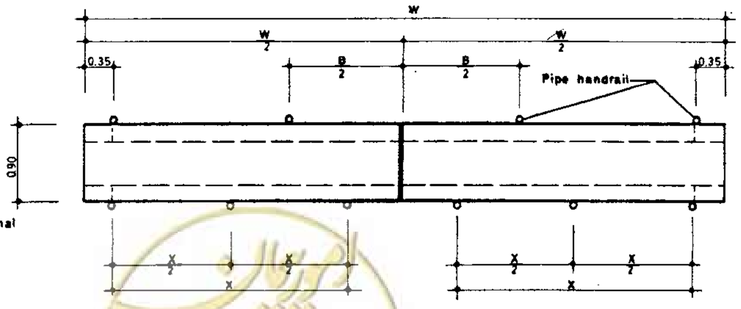

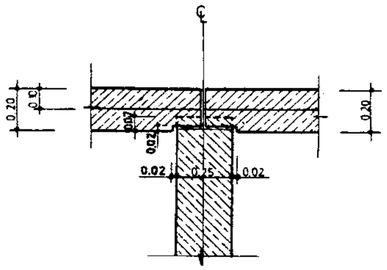

DIMENSION TABLE

STR. #	MAX. Q m^3/s	SLIDE GATE WIDTH x HEIGHT m.	FRM HT. m.	STANDARD DIMENSION B m.	C m.	L_1 m.	L_2 m.	N #	R m.	W m.	X m.	e m.	Conc. m^3	R/Bar Kg.	Form m^2
1	1.600	100 x 080	1.70	2.25	085	2.10	200	5	0300	6.00	135	0.75	7.62	512.69	31.90
2	1.800	100 x 090	1.80	2.25	095	2.20	250	5	0350	6.30	140	0.75	8.07	540.63	33.47
3	2.000	100 x 100	2.20	2.25	105	2.30	2.50	5	0300	6.60	150	0.75	8.59	588.54	36.79
4	2.200	100 x 110	2.40	2.25	115	2.40	250	6	0325	6.90	1.25	0.75	8.95	616.34	37.94
5	2.160	1.20 x 090	1.90	2.65	100	2.20	250	6	0300	6.85	1.25	0.75	8.88	591.39	37.18
6	2.400	1.20 x 100	2.10	2.65	110	2.30	250	6	0325	7.15	130	0.75	9.20	624.06	39.79
7	2.640	1.20 x 110	2.40	2.65	120	2.40	250	6	0350	7.40	135	0.75	9.71	668.07	42.50
8	2.520	1.40 x 090	2.00	3.05	100	2.30	250	6	0375	7.25	130	0.75	9.28	643.90	38.88
9	2.800	1.40 x 100	2.20	3.05	110	2.40	3.00	6	0275	7.55	140	0.75	9.80	678.13	41.47
10	3.080	1.40 x 110	2.40	3.05	120	2.50	3.00	6	0.300	7.85	145	0.75	10.38	710.06	44.16
11	3.200	1.60 x 100	2.20	3.45	110	2.40	3.00	6	0350	7.95	1.45	0.75	10.36	711.01	43.07

REFERENCE DWGS: For general notes and minimum requirements for detailing reinforcement see dwgs. Nº 20/2/1/01 TO 20/2/1/03
For reinforcement see dwg Nº 12/2/3/01
For notes & check structure selecting procedure, see dwg. Nº 12/1/1/01
For type of erosion protection see dwg Nº 13/1/1/01
For construction detail of "gate frame guide" see dwg. Nº 12/6/1/01

Scale: N.T.S	IRRIGATION & DRAINAGE STANDARDS		ISLAMIC REPUBLIC OF IRAN
Date:	DWG. Nº 12/2/1/02	CHECK STRUCTURES (Earth canal) Q = 1600 ~ 3200 l/sec. PLAN & SECTION	MINISTRY OF PLAN & BUDGET
Approved:	Sheet. Nº 2 of 5	Rev. Nº	TECHNICAL RESEARCH AND STANDARD BUREAU

omoorepeyman.ir

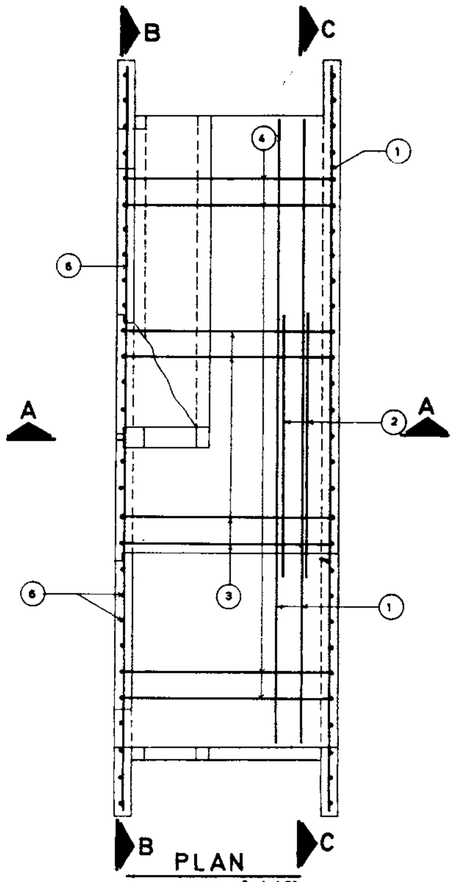

PLAN
Scale 1:50

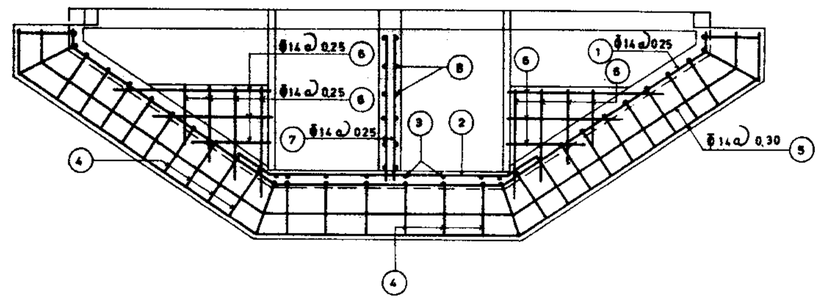

SECTION B_B
Scale 1:50

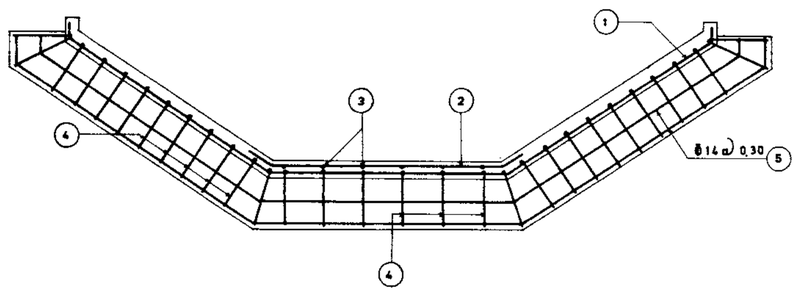

SECTION C_C
Scale 1:50

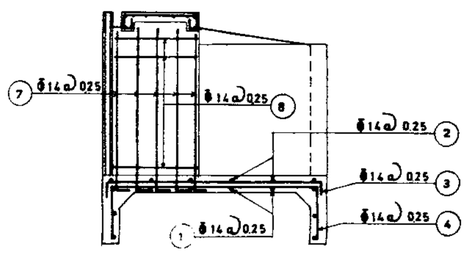

SECTION A_A
Scale 1:50

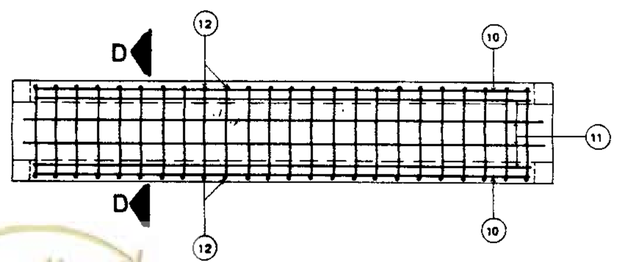

PLAN
OPERATING DECK

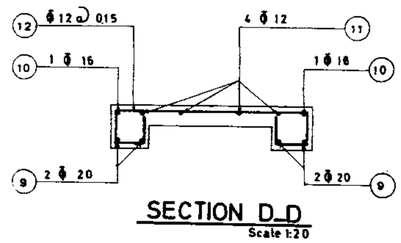

SECTION D_D
Scale 1:20

REFERENCE DWGS: For details of dimensions see dwgs. Nº 12/2/1/01 & 12/2/1/02
For reinforcement tables see dwgs. Nº 12/2/3/03 & 12/2/3/03

Scale:1:50, 1:20	IRRIGATION & DRAINAGE STANDARDS		
Date:	DWG. Nº. 12/2/3/01		CHECK STRUCTURES Q = 1600 ~ 3200 l/sec. REINFORCEMENT PLAN & SECTIONS
Approved:	Sheet Nº: 3 of 5	Rev. Nº.	

ISLAMIC REPUBLIC OF IRAN
MINISTRY OF PLAN & BUDGET
TECHNICAL RESEARCH AND STANDARD BUREAU

@omoorepeyman.ir

STR.1

Pos.	Φ	No.	FORM	Unit leng	Total leng	U.Wt. Kg.	Total weight
1	14	10	0.24 2.07 2.33 2.07 0.24	6.71	67.10	1.21	81.19
2	14	10	0.10 2.53 0.10	2.73	27.30	1.21	33.03
3	14	10	2.02 (.20 .20)	2.42	24.20	1.21	29.28
4	14	29	1.93 (.55 .55)	3.03	87.87	1.21	106.32
5	14	4	.07 .30 2.24~2.42 2.41~2.55 2.24~2.42 .07 .30	7.51	30.04	1.21	36.35
6	14	20	0.50~1.72	1.11	22.20	1.21	26.86
7	14	5	.15 .30 1.40 .15 .30 1.40	4.04	20.20	1.21	24.44
8	14	7	.15 .90 .15 .17 .90 .17	2.74	19.18	1.21	23.21
9	20	8	.10 2.92 .10	3.12	24.98	2.47	61.65
10	16	4	2.92 (.10 .10)	3.12	12.48	1.58	19.72
11	12	8	2.92 (.10 .10)	3.12	24.96	0.888	22.16
12	12	42	0.82 .12 .12 .10 .10 .12 .12	1.50	63.00	0.888	55.94
							520.15 Kg.

STR.3

Pos.	Φ	No.	FORM	Unit leng	Total leng	U.Wt. Kg.	Total weight
1	14	11	0.24 2.43 2.33 2.43 0.24	7.43	81.73	1.21	98.89
2	14	11	0.10 2.53 0.10	2.73	30.03	1.21	36.34
3	14	10	2.22 (.20 .20)	2.62	26.20	1.21	31.70
4	14	32	2.13 (.55 .55)	3.23	103.36	1.21	125.07
5	14	4	.07 .30 2.60~2.78 2.41~2.55 2.60~2.78 .07 .30	8.23	32.92	1.21	39.98
6	14	24	0.50~2.02	1.26	30.24	1.21	36.59
7	14	5	.15 .30 1.40 .15 .30 1.40	4.44	22.20	1.21	26.86
8	14	8	.15 .90 .15 .17 .90 .17	2.74	21.92	1.21	26.52
9	20	8	.10 3.22 .10	3.42	27.36	2.47	67.58
10	16	4	3.22 (.10 .10)	3.42	13.68	1.58	21.61
11	12	8	3.22 (.10 .10)	3.42	27.36	0.888	24.30
12	12	46	0.82 .12 .12 .10 .10 .12 .12	1.50	69.00	0.888	61.27
							596.71 Kg.

STR.5

Pos.	Φ	No.	FORM	Unit leng	Total leng	U.Wt. Kg.	Total weight
1	14	10	0.24 2.34 2.73 2.34 0.24	7.65	76.50	1.21	92.57
2	14	10	0.10 2.93 0.10	3.13	31.30	1.21	37.87
3	14	12	2.12 (.20 .20)	2.52	30.24	1.21	36.59
4	14	33	2.03 (0.55 0.55)	3.13	103.29	1.21	124.98
5	14	4	.07 .30 2.51~2.69 2.81~2.95 2.51~2.69 .07 .30	8.45	33.80	1.21	40.90
6	14	22	0.50~1.94	1.22	26.84	1.21	32.48
7	14	5	.15 .30 1.55 .15 .30 1.55	4.34	21.70	1.21	26.26
8	14	8	.15 .90 .15 .17 .90 .17	2.74	21.92	1.21	26.52
9	20	8	.10 3.35 .10	3.55	28.40	2.47	70.15
10	16	4	3.35 (.10 .10)	3.55	14.20	1.58	22.44
11	12	8	3.35 (.10 .10)	3.55	28.40	0.888	25.22
12	12	48	0.82 .12 .12 .10 .10 .12 .12	1.50	72.00	0.888	63.94
							599.92 Kg.

STR.2

Pos.	Φ	No.	FORM	Unit leng	Total leng	U.Wt. Kg.	Total weight
1	14	10	0.24 2.25 2.33 2.55 0.24	7.07	70.70	1.21	95.55
2	14	10	.10 2.53 .10	2.73	27.30	1.21	33.03
3	14	10	2.12 (.20 .20)	2.52	25.20	1.21	30.49
4	14	30	2.03 (.55 .55)	3.13	93.90	1.21	113.62
5	14	4	.07 .30 2.42~2.60 2.41~2.55 2.42~2.60 .07 .30	7.87	31.48	1.21	38.09
6	14	22	0.50~1.87	1.19	26.18	1.21	31.68
7	14	5	.15 .30 1.50 .15 .30 1.50	4.24	21.20	1.21	25.65
8	14	7	.15 .90 .15 .17 .90 .17	2.74	19.18	1.21	23.21
9	20	8	.10 3.07 .10	3.27	26.16	2.47	64.62
10	16	4	3.07 (.10 .10)	3.27	13.08	1.58	20.67
11	12	8	3.07 (.10 .10)	3.27	26.16	0.888	23.23
12	12	44	0.82 .12 .12 .10 .10 .12 .12	1.50	66.00	0.888	58.61
							548.45 Kg.

STR.4

Pos.	Φ	No.	FORM	Unit leng	Total leng	U.Wt. Kg.	Total weight
1	14	11	0.24 2.61 2.33 2.61 0.24	7.79	85.69	1.21	103.68
2	14	11	0.10 2.53 0.10	2.73	30.03	1.21	36.34
3	14	10	2.32 (.20 .20)	2.74	27.40	1.21	33.15
4	14	33	2.33 (.55 .55)	3.33	109.89	1.21	132.97
5	14	4	.07 .30 2.78~2.96 2.41~2.55 2.78~2.96 .07 .30	8.59	34.36	1.21	41.58
6	14	26	0.50~2.17	1.34	34.84	1.21	42.16
7	14	5	.15 .30 1.70 .15 .30 1.70	4.64	23.20	1.21	28.07
8	14	8	.15 .90 .15 .17 .90 .17	2.74	21.92	1.21	26.52
9	20	8	.10 3.37 .10	3.57	28.56	2.47	70.54
10	16	4	3.37 (.10 .10)	3.57	14.28	1.58	22.56
11	12	8	3.37 (.10 .10)	3.57	28.56	0.888	25.36
12	12	48	0.82 .12 .12 .10 .10 .12 .12	1.50	72.00	0.888	63.94
							626.87 Kg.

STR.6

Pos.	Φ	No.	FORM	Unit leng	Total leng	U.Wt. Kg.	Total weight
1	14	11	0.24 2.52 2.73 2.52 0.24	8.01	88.11	1.21	106.61
2	14	11	0.10 2.93 0.10	3.13	34.43	1.21	41.66
3	14	12	2.22 (.20 .20)	2.62	31.44	1.21	38.04
4	14	34	2.13 (.55 .55)	3.23	109.82	1.21	132.88
5	14	4	.07 .30 2.69~2.87 2.81~2.95 2.69~2.87 .07 .30	8.81	35.24	1.21	42.64
6	14	24	0.50~2.09	1.30	31.20	1.21	37.75
7	14	5	.15 .30 1.65 .15 .30 1.65	4.54	22.70	1.21	27.47
8	14	8	.15 .90 .15 .17 .90 .17	2.74	21.92	1.21	26.52
9	20	8	.10 3.50 .10	3.70	29.60	2.47	73.11
10	16	4	3.50 (.10 .10)	3.70	14.80	1.58	23.38
11	12	8	3.50 (.10 .10)	3.70	29.60	0.888	26.28
12	12	50	0.82 .12 .12 .10 .10 .12 .12	1.50	75.00	0.888	66.60
							642.94 Kg.

'REFERENCE DWGS: For reinforcement see dwg. No 12/2/3/01

For bars with variable unit length see note under the same title at dwg. No 20/2/1/01

Scale:	IRRIGATION & DRAINAGE STANDARDS		
Date:	DWG. No. 12/2/3/02	CHECK STRUCTURES LIST OF REINFORCEMENT STR. 1 TO 6	ISLAMIC REPUBLIC OF IRAN MINISTRY OF PLAN & BUDGET TECHNICAL RESEARCH AND STANDARD BUREAU
Approved:	Sheet No. 4 of 5 Rev. No.		

@omoorepeyman.ir

STR.7

Pos.	Φ	№.	FORM	Unit leng	Total leng	U.Wt. Kg.	Total weight
1	14	11	2.70 2.73 2.70	8.37	92.07	1.21	111.40
2	14	11	2.93	3.13	34.43	1.21	41.66
3	14	12	2.32	2.72	32.64	1.21	39.49
4	14	36	2.23	3.33	119.88	1.21	145.05
5	14	4	2.87-3.05 2.81-2.95 2.87-3.05	9.17	36.68	1.21	44.38
6	14	26	0.50~2.24	1.37	35.62	1.21	43.10
7	14	5		4.74	23.70	1.21	28.68
8	14	8		2.74	21.92	1.21	26.52
9	20	8	3.65	3.85	30.80	2.47	76.08
10	16	4	3.65	3.85	15.40	1.58	24.33
11	12	8	3.65	3.85	30.80	0.888	27.35
12	12	52	0.82	1.50	78.00	0.888	69.26
							677.30 Kg.

STR.9

Pos.	Φ	№.	FORM	Unit leng	Total leng	U.Wt. Kg.	Total weight
1	14	11	2.52 3.13 2.52	8.41	92.51	1.21	111.94
2	14	11	3.33	3.53	38.83	1.21	46.98
3	14	14	2.32	2.72	38.08	1.21	46.08
4	14	36	2.23	3.33	119.88	1.21	145.05
5	14	4	2.69-2.87 3.21-3.35 2.69-2.87	9.21	36.84	1.21	44.58
6	14	24	0.50~2.09	1.30	31.20	1.21	37.75
7	14	5		4.54	22.70	1.21	27.47
8	14	8		2.74	21.92	1.21	26.52
9	20	8	3.70	3.90	31.20	2.47	77.06
10	16	4	3.70	3.90	15.60	1.58	24.65
11	12	8	3.70	3.90	31.20	0.888	27.71
12	12	54	0.82	1.50	81.00	0.888	71.93
							687.72 Kg.

STR.11

Pos.	Φ	№.	FORM	Unit leng	Total leng	U.Wt. Kg.	Total weight
1	14	11	2.52 3.53 2.52	8.81	96.91	1.21	117.26
2	14	11	3.73	3.93	43.23	1.21	52.31
3	14	15	2.32	2.72	40.80	1.21	49.37
4	14	38	2.23	3.33	126.54	1.21	153.11
5	14	4	2.69-2.87 3.61~3.75 2.69-2.87	9.61	38.44	1.21	46.51
6	14	24	0.50~2.09	1.30	31.20	1.21	37.75
7	14	5		4.54	22.70	1.21	27.47
8	14	8		2.74	21.92	1.21	26.52
9	20	8	3.90	4.10	32.80	2.47	81.02
10	16	4	3.90	4.10	16.40	1.58	25.91
11	12	8	3.90	4.10	32.80	0.888	29.13
12	12	56	0.82	1.50	84.00	0.888	74.59
							720.95 Kg.

STR.8

Pos.	Φ	№.	FORM	Unit leng	Total leng	U.Wt. Kg.	Total weight
1	14	11	2.34 3.13 2.34	8.05	88.55	1.21	107.15
2	14	11	3.33	3.53	38.83	1.21	46.98
3	14	14	2.22	2.62	36.68	1.21	44.33
4	14	34	2.13	3.23	109.82	1.21	132.88
5	14	4	2.51-2.69 3.21-3.35 2.51-2.69	8.85	35.40	1.21	42.83
6	14	22	0.50~1.94	1.22	26.84	1.21	32.48
7	14	5		4.34	21.70	1.21	26.26
8	14	8		2.74	21.92	1.21	26.52
9	20	8	3.55	3.75	30.00	2.47	74.10
10	16	4	3.55	3.75	15.00	1.58	23.70
11	12	8	3.55	3.75	30.00	0.888	26.64
12	12	52	0.82	1.50	78.00	0.888	69.26
							653.13 Kg.

STR.10

Pos.	Φ	№.	FORM	Unit leng	Total leng	U.Wt. Kg.	Total weight
1	14	11	2.70 3.13 2.70	8.77	96.47	1.21	116.73
2	14	11	3.33	3.53	38.83	1.21	46.98
3	14	14	2.42	2.82	39.48	1.21	47.77
4	14	37	2.33	3.43	126.91	1.21	153.56
5	14	4	2.51-2.69 2.87~3.05 2.51-2.69	9.89	39.56	1.21	47.87
6	14	26	0.50~2.24	1.37	35.62	1.21	43.10
7	14	5		4.74	23.70	1.21	28.68
8	14	8		2.74	21.92	1.21	26.52
9	20	8	3.85	4.05	32.40	2.47	80.03
10	16	4	3.85	4.05	16.20	1.58	25.60
11	12	8	3.85	4.05	32.40	0.888	28.77
12	12	56	0.82	1.50	84.00	0.888	74.59
							720.20 Kg.

REFERENCE DWGS: For reinforcement see dwg. № 12/2/3/01

For bars with variable unit length see note under the same title at dwg. № 20/2/1/01

Scale:	IRRIGATION & DRAINAGE STANDARDS		ISLAMIC REPUBLIC OF IRAN
Date:	DWG. №. 12/2/3/03	CHECK STRUCTURES LIST OF REINFORCEMENT STR. 7 TO 11	MINISTRY OF PLAN & BUDGET
Approved:	Sheet.№. 5 of 5 Rev.№.		TECHNICAL RESEARCH AND STANDARD BUREAU

omoorepeyman.ir

STR.	1	2	3	4	5	6	7	8	9	10	11	12	13	14	15	16	17	18	19	20	21	22	23	24
Form m^2	15.77	17.60	19.12	20.51	22.86	26.55	19.12	20.43	22.05	23.79	30.23	32.23	21.16	22.77	24.52	31.01	32.95	23.47	25.21	31.83	33.87	26.30	32.65	34.69

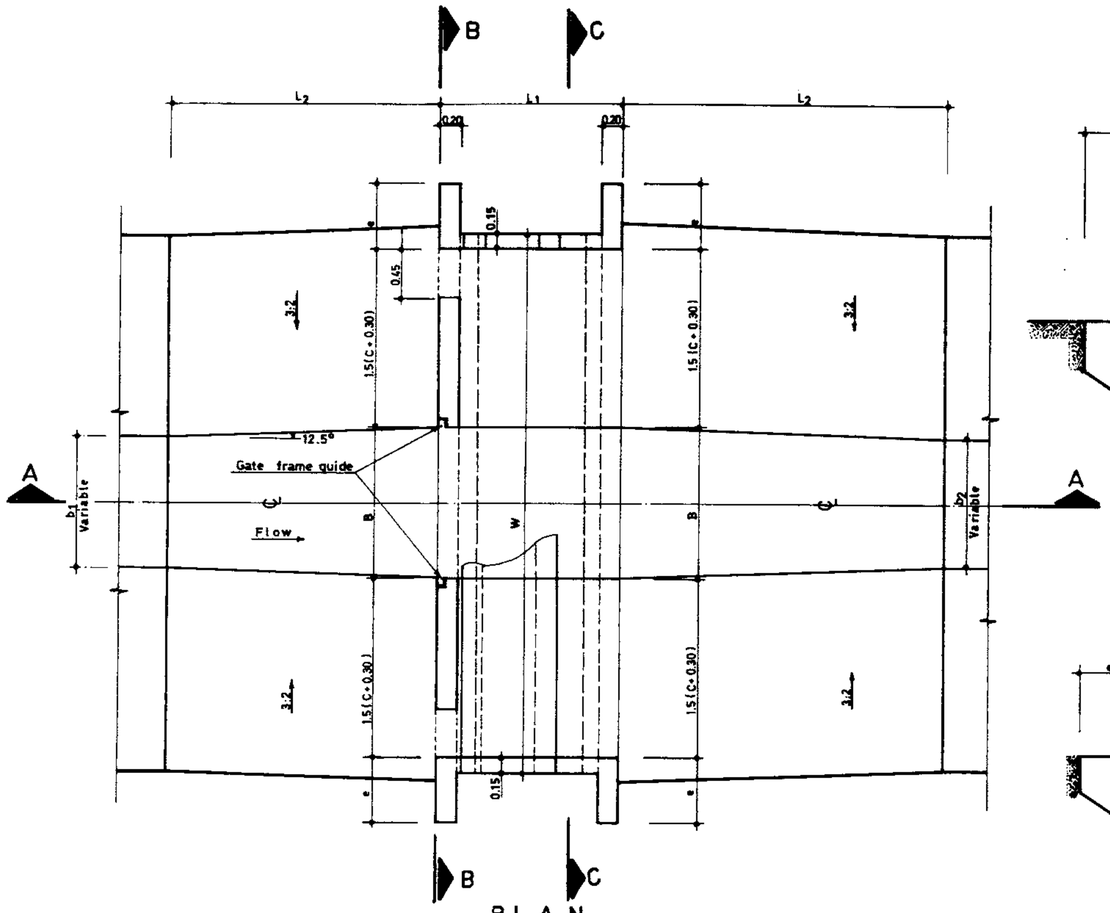

PLAN

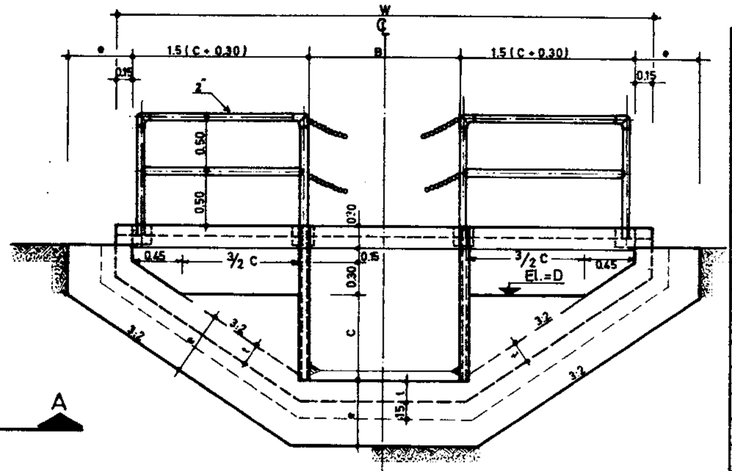

SECTION B_B

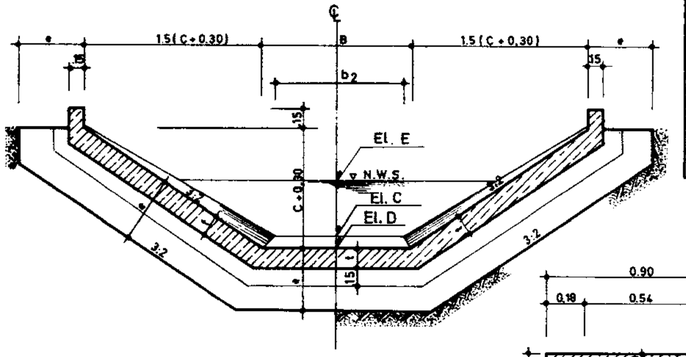

SECTION C_C

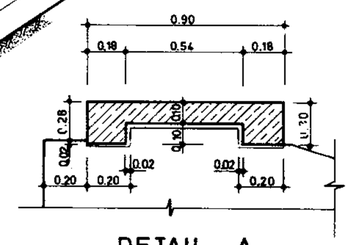

DETAIL A

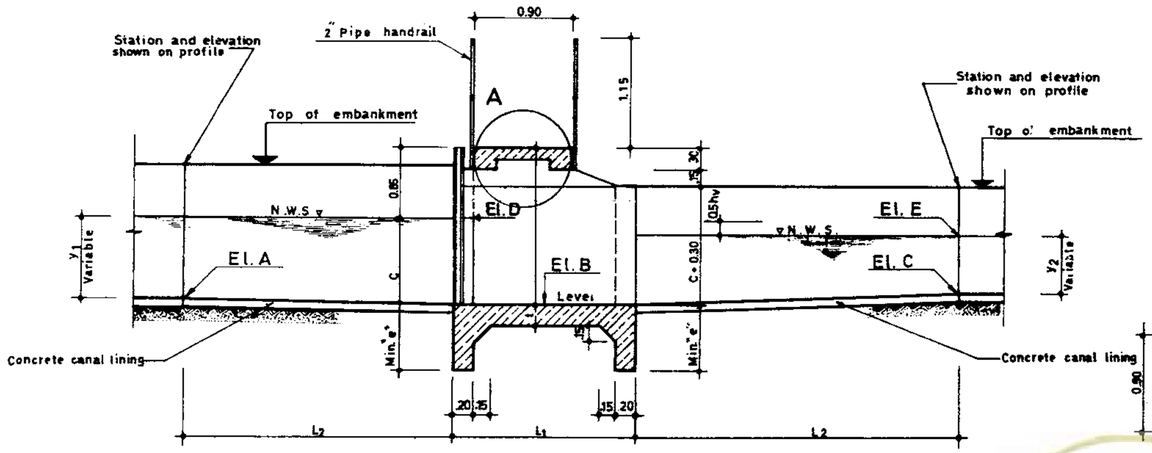

SECTION A_A

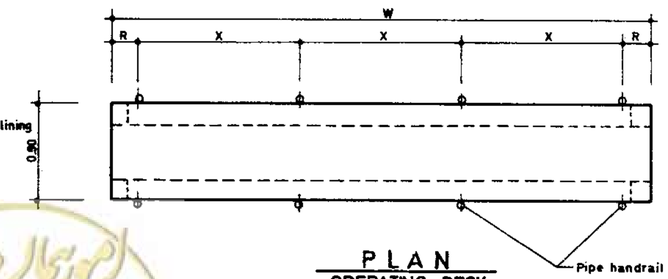

PLAN
OPERATING DECK

DIMENSION TABLE

STR. #	MAX. Q m^3/s	SLIDE GATE WIDTH x HEIGHT m.	SLIDE GATE FRM HT. m.	STANDARD DIMENSION B m.	C m.	L_1 m.	L_2 m.	N #	R m.	W m.	X m.	e m.	t m.	Conc. m^3	R/Bar Kg
1	0.300	1.00 x 0.30	0.70	1.00	0.35	1.40	1.50	3	0.325	3.25	1.30	0.60	0.15	3.47	203.45
2	0.400	1.00 x 0.40	0.90	1.00	0.45	1.40	1.50	3	0.325	3.55	1.45	0.60	0.15	3.87	222.29
3	0.500	1.00 x 0.50	1.10	1.00	0.55	1.40	1.50	3	0.325	3.85	1.60	0.60	0.15	4.27	240.22
4	0.600	1.00 x 0.60	1.30	1.00	0.65	1.50	1.50	3	0.325	4.15	1.75	0.60	0.18	4.67	264.79
5	0.700	1.00 x 0.70	1.50	1.00	0.75	1.70	1.50	3	0.325	4.45	1.90	0.60	0.18	5.11	295.63
6	0.800	1.00 x 0.80	1.70	1.00	0.85	1.90	1.50	3	0.325	4.75	2.05	0.75	0.18	6.07	341.40
7	0.480	1.20 x 0.40	0.90	1.20	0.50	1.40	1.50	3	0.350	3.90	1.60	0.60	0.15	4.23	214.76
8	0.600	1.20 x 0.50	1.10	1.20	0.60	1.40	1.50	3	0.350	4.20	1.75	0.60	0.18	4.63	262.02
9	0.720	1.20 x 0.60	1.30	1.20	0.70	1.50	1.50	3	0.350	4.50	1.90	0.60	0.18	5.05	285.54
10	0.840	1.20 x 0.70	1.50	1.20	0.80	1.70	1.50	4	0.300	4.80	1.40	0.60	0.18	5.29	318.01
11	0.960	1.20 x 0.80	1.70	1.20	0.90	1.90	1.50	4	0.300	5.10	1.50	0.75	0.20	6.28	394.70
12	1.080	1.20 x 0.90	1.90	1.20	1.00	2.10	2.00	4	0.300	5.40	1.60	0.75	0.20	6.75	438.04
13	0.700	1.40 x 0.50	1.10	1.40	0.60	1.40	2.00	3	0.300	4.40	1.90	0.60	0.18	4.82	270.55
14	0.840	1.40 x 0.60	1.30	1.40	0.70	1.50	2.00	3	0.350	4.70	2.00	0.60	0.18	5.25	294.86
15	0.980	1.40 x 0.70	1.50	1.40	0.80	1.70	2.00	4	0.325	5.00	1.45	0.60	0.18	5.50	330.43
16	1.120	1.40 x 0.80	1.70	1.40	0.90	1.90	2.00	4	0.325	5.30	1.55	0.75	0.20	6.55	412.79
17	1.260	1.40 x 0.90	2.00	1.40	1.00	2.10	2.00	4	0.325	5.60	1.65	0.75	0.20	7.06	457.12
18	0.960	1.60 x 0.60	1.30	1.60	0.70	1.50	2.00	4	0.350	4.90	1.40	0.60	0.18	5.20	305.50
19	1.120	1.60 x 0.70	1.50	1.60	0.80	1.70	2.00	4	0.350	5.20	1.50	0.60	0.18	5.71	341.54
20	1.280	1.60 x 0.80	1.80	1.60	0.90	1.90	2.00	4	0.350	5.50	1.60	0.75	0.20	6.81	429.56
21	1.440	1.60 x 0.90	2.00	1.60	1.00	2.10	2.00	4	0.350	5.80	1.70	0.75	0.20	7.31	471.19
22	1.260	1.80 x 0.70	1.60	1.80	0.80	1.70	2.00	4	0.300	5.40	1.60	0.60	0.18	5.94	349.78
23	1.440	1.80 x 0.80	1.80	1.80	0.90	1.90	2.00	4	0.300	5.70	1.70	0.75	0.20	7.01	446.33
24	1.620	1.80 x 0.90	2.00	1.80	1.00	2.10	2.00	4	0.300	6.00	1.80	0.75	0.20	7.22	488.91

NOTES:

① N = Nº of handrail
② For "Q" greater than 1 m^3/sec. upstream handrail is required with a safety chain at gate opening.
③ All checks shall have continious handrail bolted to precast concrete deck.
④ Gate frame height measured from ℄ of gate opening.
⑤ Chamfer all exposed corner 2 cm unless other wise shown.
⑥ Values of L_2 given in table are the minimum required lengths.

CHECK STRUCTURE SELECTING PROCEDURE:

① Determine "Q" in m^3/s in U/S canal.
② Select the structure from "dimension table" with respect to required "Q".
③ If the required "Q" not found in the table, select the structure's dimensions with next largest "Q".
④ El. D is equal to: El. A + y_1
⑤ El. B = El. D - "C"
Note that El. B should be equal to or less than El. "A" to avoid a jump in the bottom of the canal. If El. B is higher than El. A, a structure with a larger dimension should be selected.
⑥ D/S water elevation "El. E" is equal to: El. D - 0.5 h_v in which, h_v is the difference between the velocity head at the check opening and the velocity head in canal section upstream of the structure. A minimum head los of 0.03m. should be allowed
⑦ El. C: El. E - y_2

REFERENCE DWGS: For general notes and minimum requirements for detailing reinforcement see dwgs. 20/2/1/01 TO 20/2/1/03
For reinforcement see dwg. Nº 12/1/3/01
For construction detail of "gate frame guide" see dwg. Nº 12/6/1/01

Scale: N.T.S	IRRIGATION & DRAINAGE STANDARDS		ISLAMIC REPUBLIC OF IRAN
Date:	DWG. Nº 12/1/1/01	CHECK STRUCTURES (Concrete canal) Q = 300 ~ 1620 l/sec. PLAN & SECTION	MINISTRY OF PLAN & BUDJET
Approved:	Sheet.Nº: 1 of 6 Rev.Nº		TECHNICAL RESEARCH AND STANDARD BUREAU

@omoorepeyman.ir

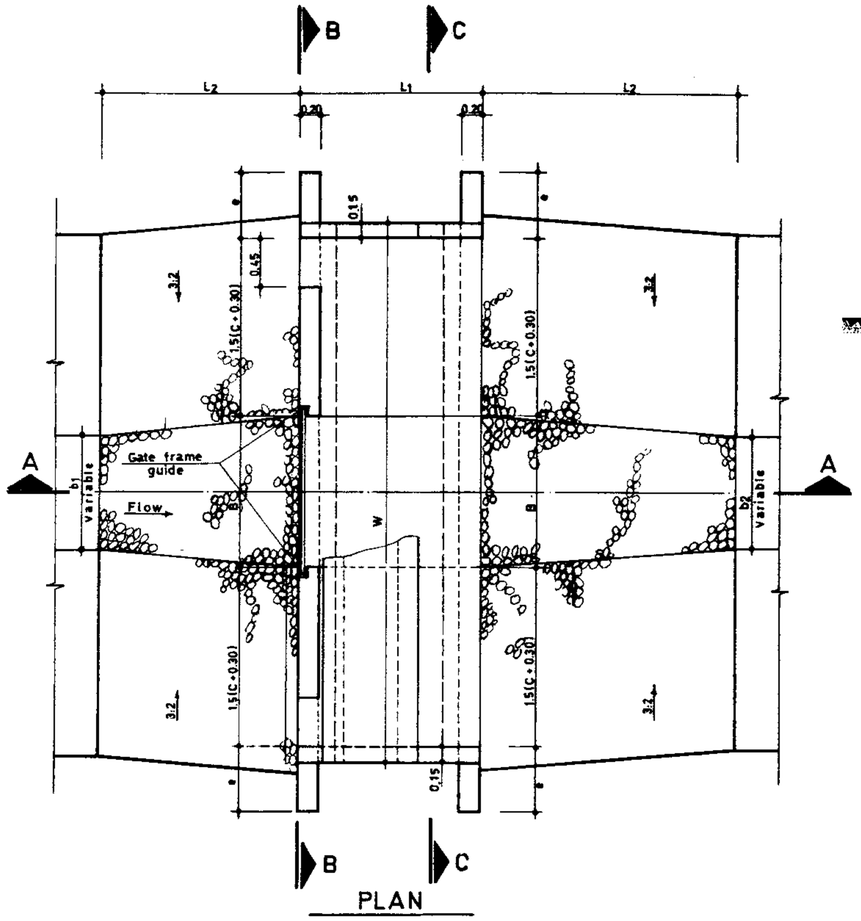

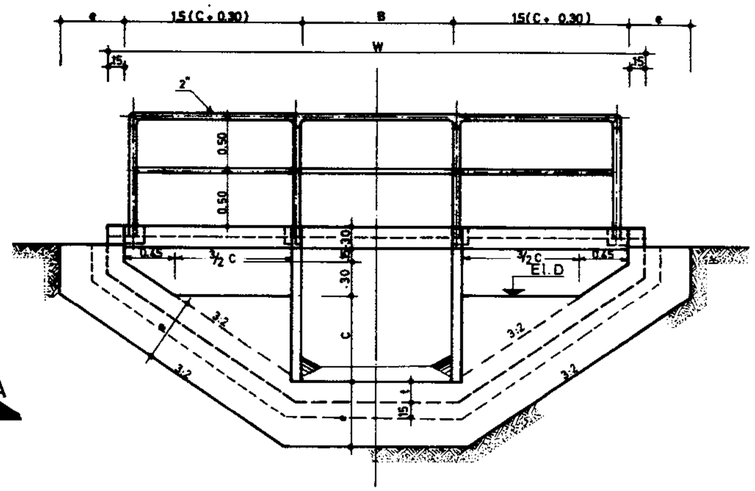

SECTION B.B.

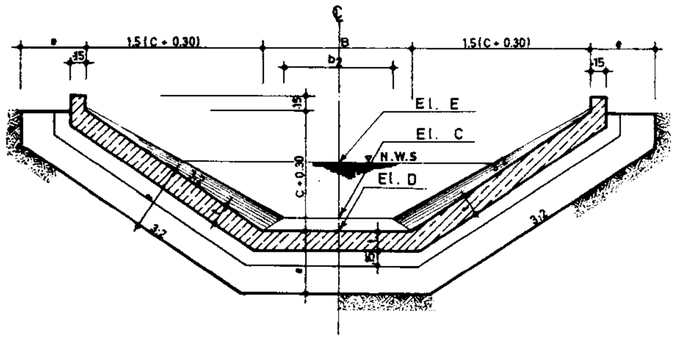

SECTION C C

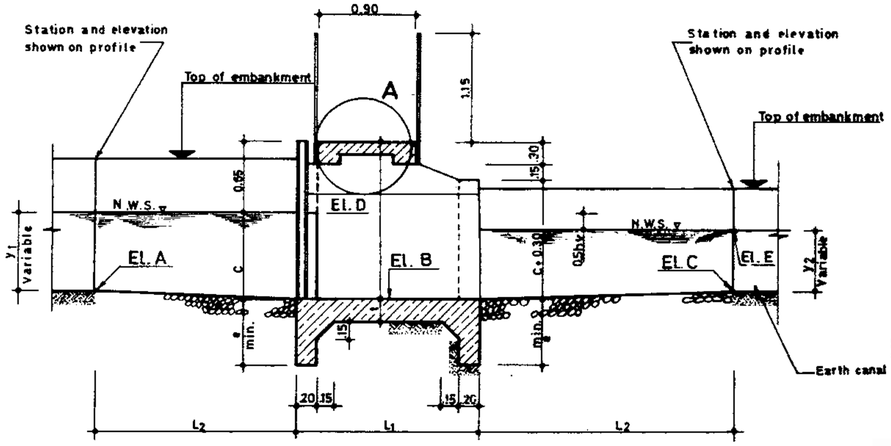

SECTION A A

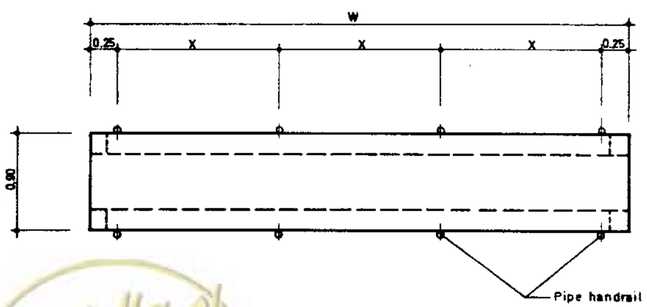

PLAN
OPERATING DECK

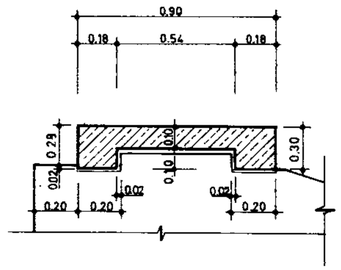

DETAIL A

DIMENSION TABLE

STR. #	MAX. Q m³/s	SLIDE GATE WIDTH x HEIGHT m	FRM HT. m.	STANDARD DIMENSION B m.	C m.	L_1 m.	L_2 m.	N #	R m.	W m.	X m.	e m.	t m.	Conc. m³	R/Bar. Kg	Form m2
1	0.300	1.00x0.30	0.70	1.00	0.35	1.40	1.50	3	0.325	3.25	1.30	0.60	0.15	3.47	203.65	15.77
2	0.400	1.00x0.40	0.90	1.00	0.45	1.40	1.50	3	0.325	3.55	1.45	0.60	0.15	3.87	222.29	17.60
3	0.500	1.00x0.50	1.10	1.00	0.55	1.40	1.50	3	0.325	3.85	1.60	0.60	0.15	4.27	240.22	19.12
4	0.600	1.00x0.60	1.30	1.00	0.65	1.50	1.50	3	0.325	4.15	1.75	0.60	0.18	4.67	264.79	20.51
5	0.700	1.00x0.70	1.50	1.00	0.75	1.70	1.50	3	0.325	4.45	1.90	0.75	0.18	5.11	296.43	22.85
6	0.800	1.00x0.80	1.70	1.00	0.85	1.90	1.50	3	0.325	4.75	2.05	0.75	0.18	6.07	341.40	28.55
7	0.480	1.20x0.40	0.90	1.20	0.50	1.40	1.50	3	0.350	3.90	1.60	0.60	0.15	4.23	242.76	19.12
8	0.600	1.20x0.50	1.10	1.20	0.60	1.40	1.50	3	0.350	4.20	1.75	0.60	0.18	4.63	262.02	20.43
9	0.720	1.20x0.60	1.30	1.20	0.70	1.50	1.50	3	0.350	4.50	1.90	0.60	0.18	5.05	285.54	22.05
10	0.840	1.20x0.70	1.50	1.20	0.80	1.70	1.50	4	0.300	4.80	1.40	0.75	0.18	5.29	318.01	23.79
11	0.960	1.20x0.80	1.70	1.20	0.90	1.90	1.50	4	0.300	5.10	1.50	0.75	0.20	6.26	394.70	30.23
12	1.080	1.20x0.90	1.90	1.20	1.00	2.10	2.00	4	0.300	5.40	1.60	0.75	0.20	6.79	438.04	32.23
13	0.700	1.40x0.50	1.10	1.40	0.60	1.40	2.00	3	0.300	4.40	1.90	0.60	0.18	4.82	270.55	21.16
14	0.840	1.40x0.60	1.30	1.40	0.70	1.60	2.00	3	0.350	4.70	2.00	0.60	0.18	5.25	294.86	22.77
15	0.980	1.40x0.70	1.50	1.40	0.80	1.70	2.00	4	0.325	5.00	1.45	0.75	0.18	5.50	330.43	24.52
16	1.120	1.40x0.80	1.70	1.40	0.90	1.90	2.00	4	0.325	5.30	1.55	0.75	0.20	6.55	412.79	31.01
17	1.260	1.40x0.90	2.00	1.40	1.00	2.10	2.00	4	0.325	5.60	1.65	0.75	0.20	7.06	457.42	32.95
18	0.960	1.60x0.60	1.30	1.60	0.70	1.50	2.00	3	0.350	4.90	1.40	0.60	0.18	5.20	305.50	23.47
19	1.120	1.60x0.70	1.50	1.60	0.80	1.70	2.00	4	0.350	5.20	1.50	0.75	0.18	5.71	341.54	25.21
20	1.280	1.60x0.80	1.70	1.60	0.90	1.90	2.00	4	0.350	5.50	1.60	0.75	0.20	6.81	429.56	31.83
21	1.440	1.60x0.90	2.00	1.60	1.00	2.10	2.00	4	0.350	5.80	1.70	0.75	0.20	7.31	471.19	33.87
22	1.260	1.80x0.70	1.60	1.80	0.80	1.70	2.00	4	0.300	5.40	1.60	0.75	0.18	5.94	349.78	26.30
23	1.440	1.80x0.80	1.80	1.80	0.90	1.90	2.00	4	0.300	5.70	1.70	0.75	0.20	7.04	446.33	32.65
24	1.620	1.80x0.90	2.00	1.80	1.00	2.10	2.00	4	0.300	6.00	1.80	0.75	0.20	7.22	488.91	34.69

REFERENCE DWGS: For general notes and minimum requirements for detailing reinforcement see dwgs. 20/2/1/01 TO 20/2/1/03
For reinforcement see dwg. Nº 12/1/3/01
For check structure selecting procedure and notes see dwg.Nº 12/1/1/01
For type of erosion protection see dwg Nº 13/3/1/01
For construction detail of "gate frame guide" see dwg. Nº 12/6/1/01

Scale: N.T.S	IRRIGATION & DRAINAGE STANDARDS		CHECK STRUCTURES (Earth canal) Q = 300 ~ 1620 l/sec. PLAN & SECTION
Date:	DWG. Nº 12/1/1/02		
Approved:	Sheet.Nº: 2 of 6	Rev.Nº	

ISLAMIC REPUBLIC OF IRAN
MINISTRY OF PLAN & BUDJET
TECHNICAL RESEARCH AND STANDARD BUREAU

@omoorepeyman.ir

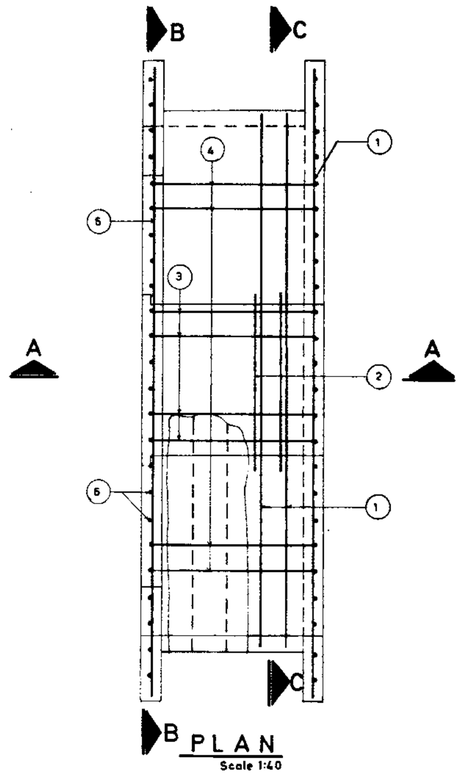

B PLAN
Scale 1:40

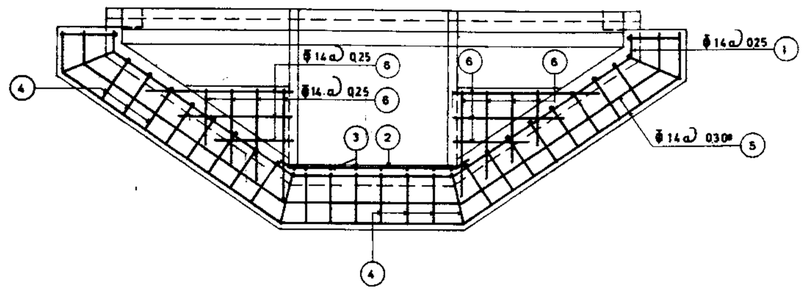

SECTION B_B
Scale 1:40

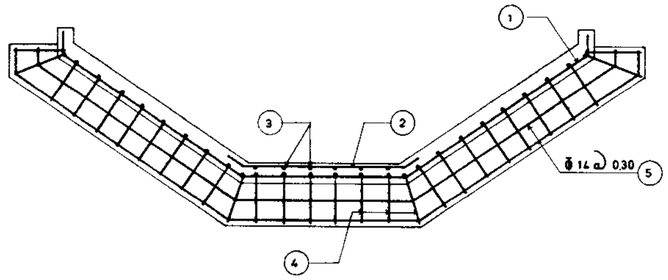

SECTION C_C
Scale 1:40

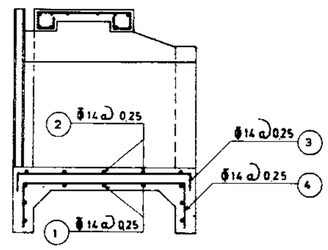

SECTION A_A
Scale 1:40

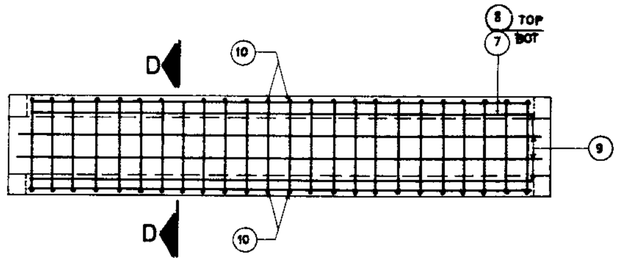

PLAN
OPERATING DECK

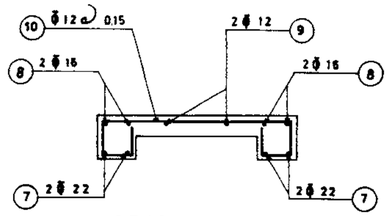

SECTION D_D
Scale 1:20

Pos. (2) and (3) are omitted when t<20 cm

REFERENCE DWGS: For detail of dimensions see dwgs.№ 12/1/1/01 & 12/1/1/02
For reinforcement table see dwgs.№ 12/1/3/02 TO 12/1/3/04

Scale: 1:40, 1:20	IRRIGATION & DRAINAGE STANDARDS	
Date:	DWG. № 12/1/3/01	CHECK STRUCTURES Q=300 ~ 1620 l/sec. REINFORCEMENT PLAN&SECTIONS
Approved:	Sheet.№: 3 of 6 Rev.№	

ISLAMIC REPUBLIC OF IRAN
MINISTRY OF PLAN & [illegible]OJET
TECHNICAL RESEARCH AND STANDARD BUREAU

STR.1

Pos.	Φ	No.	FORM	Unit Leng.	Total Leng.	U.Wt. Kg.	Total weight
1	14	7	0.24 1.17 1.08 1.17 0.24	3.66	25.62	1.21	31.00
2	–	–		–	–	–	–
3		–		–	–	–	–
4	14	17	.45 1.23 .45	2.13	36.21	1.21	43.81
5	14	4	.07 .30 1.34~1.52 1.16~1.30 1.34~1.52 .07 .30	4.46	17.84	1.21	21.59
6	14	10	0.50~0.97	0.74	7.40	1.21	8.95
7	22	4	.10 3.17 .10	3.37	13.48	2.98	40.17
8	16	4	.10 3.17 .10	3.37	13.48	1.58	21.30
9	12	2	.10 3.17 .10	3.37	6.74	0.888	5.99
10	12	23	0.82 .22 .12 .20 .20 .12 .22	1.90	43.70	0.888	38.81
							211.62 Kg.

STR.3

Pos.	Φ	No.	FORM	Unit Leng.	Total Leng.	U.Wt. Kg.	Total weight
1	14	7	0.24 1.53 1.08 1.53 0.24	4.38	30.66	1.21	37.10
2		–		–	–	–	–
3		–		–	–	–	–
4	14	20	.45 1.23 .45	2.13	42.60	1.21	51.55
5	14	4	.07 .30 1.70~1.88 1.16~1.30 1.70~1.88 .07 .30	5.18	20.72	1.21	25.07
6	14	14	0.50~1.27	0.89	12.46	1.21	15.08
7	22	4	.10 3.77 .10	3.97	15.88	2.98	43.32
8	16	4	.10 3.77 .10	3.97	15.88	1.58	25.09
9	12	2	.10 3.77 .10	3.97	7.94	0.888	7.05
10	12	27	0.82 .22 .12 .20 .20 .12 .22	1.90	51.30	0.888	45.55
							249.81 Kg.

STR.5

Pos.	Φ	No.	FORM	Unit Leng.	Total Leng.	U.Wt. Kg.	Total weight
1	14	8	0.24 1.89 1.08 1.89 0.24	5.10	40.80	1.21	49.37
2		–		–	–	–	–
3		–		–	–	–	–
4	14	22	.42 1.53 .42	2.37	52.14	1.21	63.09
5	14	4	.07 .30 2.06~2.24 1.16~1.30 2.06~2.24 .07 .30	5.90	23.60	1.21	28.56
6	14	18	0.50~1.57	1.04	18.72	1.21	22.65
7	22	4	.10 4.37 .10	4.57	18.28	2.98	54.47
8	16	4	.10 4.37 .10	4.57	18.28	1.58	28.88
9	12	2	.10 4.37 .10	4.57	9.14	0.888	8.12
10	12	31	0.82 .22 .12 .20 .20 .12 .22	1.90	58.90	0.888	52.30
							307.44 Kg.

STR.7

Pos.	Φ	No.	FORM	Unit Leng.	Total Leng.	U.Wt. Kg.	Total weight
1	14	7	0.24 1.44 1.28 1.44 0.24	4.40	30.80	1.21	37.27
2	–	–		–	–	–	–
3	–	–		–	–	–	–
4	14	20	.45 1.23 .45	2.13	42.60	1.21	51.55
5	14	4	.07 .30 1.61~1.79 1.35~1.50 1.61~1.79 .07 .30	5.20	20.80	1.21	25.17
6	14	12	0.50~1.19	0.85	10.20	1.21	12.34
7	22	4	.10 3.82 .10	4.02	16.08	2.98	47.92
8	16	4	.10 3.82 .10	4.02	16.08	1.58	25.41
9	12	2	.10 3.82 .10	4.02	8.04	0.888	7.14
10	12	27	0.82 .22 .12 .20 .20 .12 .22	1.90	51.30	0.888	45.55
							252.35 Kg.

STR.2

Pos.	Φ	No.	FORM	Unit Leng	Total Leng	U.Wt. Kg.	Total weight
1	14	7	0.24 1.35 1.08 1.35 0.24	4.02	28.14	1.21	34.05
2	–	–		–	–	–	–
3	–	–		–	–	–	–
4	14	18	.45 1.23 .45	2.13	38.34	1.21	46.39
5	14	4	.07 .30 1.52~1.70 1.16~1.30 1.52~1.70 .07 .30	4.82	19.28	1.21	23.33
6	14	12	0.50~1.12	0.81	9.72	1.21	11.76
7	22	4	.10 3.47 .10	3.67	14.68	2.98	43.75
8	16	4	.10 3.47 .10	3.67	14.68	1.58	23.19
9	12	2	.10 3.47 .10	3.67	7.34	0.888	6.52
10	12	25	0.82 .22 .12 .20 .20 .12 .22	1.90	47.50	0.888	42.18
							231.17 Kg.

STR.4

Pos.	Φ	No.	FORM	Unit Leng	Total Leng	U.Wt. Kg.	Total weight
1	14	7	0.24 1.71 1.08 1.71 0.24	4.74	33.18	1.21	40.15
2	–	–		–	–	–	–
3	–	–		–	–	–	–
4	14	21	.42 1.33 .42	2.17	45.57	1.21	55.14
5	14	4	.07 .30 1.88 2.06~2.24 1.16~1.30 1.88~2.06 .07 .30	5.54	22.16	1.21	26.81
6	14	16	0.50~1.42	0.96	15.36	1.21	18.59
7	22	4	.10 4.07 .10	4.27	17.08	2.98	50.90
8	16	4	.10 4.07 .10	4.27	17.08	1.58	26.99
9	12	2	.10 4.07 .10	4.27	8.54	0.888	7.58
10	12	29	0.82 .22 .12 .20 .20 .12 .22	1.90	55.10	0.888	48.93
							275.09 Kg.

STR.6

Pos.	Φ	No.	FORM	Unit Leng	Total Leng	U.Wt. Kg.	Total weight
1	14	9	0.24 2.07 1.08 2.07 0.24	5.46	49.14	1.21	59.46
2	–	–		–	–	–	–
3	–	–		–	–	–	–
4	14	24	.57 1.73 .57	2.87	68.88	1.21	83.34
5	14	4	.07 .30 2.24~2.42 1.16~1.30 2.24~2.42 .07 .30	6.26	25.04	1.21	30.30
6	14	20	0.50~1.42	1.11	22.20	1.21	26.86
7	22	4	.10 4.67 .10	4.87	19.48	2.98	58.05
8	16	4	.10 4.67 .10	4.87	19.48	1.58	30.78
9	12	2	.10 4.67 .10	4.87	9.74	0.888	8.65
10	12	33	0.82 .22 .12 .20 .20 .12 .22	1.90	62.70	0.888	55.68
							353.12 Kg.

STR.8

Pos.	Φ	No.	FORM	Unit Leng	Total Leng	U.Wt. Kg.	Total weight
1	14	7	0.24 1.62 1.28 1.62 0.24	4.76	33.32	1.21	40.32
2	–	–		–	–	–	–
3	–	–		–	–	–	–
4	14	21	.42 1.23 .42	2.13	44.73	1.21	54.12
5	14	4	.07 .30 1.79~1.97 1.36~1.50 1.79~1.97 .07 .30	5.56	22.24	1.21	26.91
6	14	14	0.50~1.34	0.92	12.88	1.21	15.58
7	22	4	.10 4.12 .10	4.32	17.28	2.98	51.49
8	16	4	.10 4.12 .10	4.32	17.28	1.58	27.30
9	12	2	.10 4.12 .10	4.32	8.64	0.888	7.67
10	12	29	0.82 .22 .12 .20 .20 .12 .22	1.90	55.10	0.888	48.93
							272.32 Kg.

REFERENCE DWGS: For reinforcement see dwg. Nº 12/1/3/01

For bars with variable unit length see note under the same title at dwg. Nº 20/2/1/01

Scale:

Date:

Approved:

IRRIGATION & DRAINAGE STANDARDS

DWG. Nº 12/1/3/02

Sheet.Nº: 4 of 6 | Rev.Nº

CHECK STRUCTURES

LIST OF REINFORCEMENT

STR. 1 TO 8

ISLAMIC REPUBLIC OF IRAN

MINISTRY OF PLAN & BUDJET

TECHNICAL RESEARCH AND STANDARD BUREAU

@omoorepeyman.ir

STR.9

Pos.	Φ	No.	FORM	Unit Leng	Total Leng	U.Wt. Kg.	Total weight
1	14	7	0.24 1.80 1.28 1.80 0.24	5.12	35.84	1.21	43.37
2		-		-	-	-	-
3		-		-	-	-	-
4	14	23	1.33 .42 .42	2.17	49.91	1.21	60.39
5	14	4	.07/.30 .97~2.15 1.36~1.50 .97~2.15 .07/.30	5.92	23.68	1.21	28.65
6	14	16	0.50~1.49	1.00	16.00	1.21	19.36
7	22	4	.10 4.42 .10	4.62	18.48	2.98	55.07
8	16	4	4.42 .10 .10	4.62	18.48	1.58	29.20
9	12	2	4.42	4.62	9.24	0.888	8.21
10	12	31	0.82 .22 .12 .20 .20 .12 .22	1.90	58.90	0.888	52.30
							296.55 Kg.

STR.11

Pos.	Φ	No.	FORM	Unit Leng	Total Leng	U.Wt. Kg.	Total weight
1	14	9	0.24 2.16 1.28 2.16 0.24	5.84	52.56	1.21	63.60
2	14	9	.10 1.48 .10	1.68	15.12	1.21	18.30
3	14	6	1.82 .20 .20	2.22	13.32	1.21	16.12
4	14	25	1.73 .55 .55	2.83	70.75	1.21	85.61
5	14	4	.07/.30 2.33~2.59 1.36~1.50 2.33~2.59 .07/.30	6.64	26.56	1.21	32.14
6	14	20	0.50~1.79	1.15	23.00	1.21	27.83
7	22	4	.10 5.02 .10	5.22	20.88	2.98	62.22
8	16	4	5.02 .10 .10	5.22	20.88	1.58	32.99
9	12	2	5.02 .10 .10	5.22	10.44	0.888	9.27
10	12	35	0.82 .22 .12 .20 .20 .12 .22	1.90	66.50	0.888	59.05
							407.13 Kg.

STR.13

Pos.	Φ	No.	FORM	Unit Leng	Total Leng	U.Wt. Kg.	Total weight
1	14	7	0.24 1.62 1.48 1.62 0.24	4.96	34.72	1.21	42.01
2		-		-	-	-	-
3		-		-	-	-	-
4	14	22	1.23 .42 .42	2.07	45.54	1.21	55.10
5	14	4	.07/.30 1.79~1.97 1.56~1.70 1.79~1.97 .07/.30	5.39	21.56	1.21	26.09
6	14	14	0.50~1.34	0.92	12.88	1.21	15.58
7	22	4	.10 4.32 .10	4.52	18.08	2.98	53.88
8	16	4	4.32 .10 .10	4.52	18.08	2.98	28.57
9	12	2	4.32 .10 .10	4.52	9.04	0.888	8.03
10	12	31	0.82 .22 .12 .20 .20 .12 .22	1.90	58.90	0.888	52.30
							281.56 Kg.

STR.15

Pos.	Φ	No.	FORM	Unit Leng	Total Leng	U.Wt. Kg.	Total weight
1	14	8	0.24 1.98 1.48 1.98 0.24	5.68	45.44	1.21	54.98
2		-		-	-	-	-
3		-		-	-	-	-
4	14	25	1.53 .42 .42	2.37	59.25	1.21	71.69
5	14	4	.07/.30 2.15~2.33 1.56~1.70 2.15~2.33 .07/.30	6.48	25.92	1.21	31.36
6	14	18	0.50~1.64	1.07	19.26	1.21	23.30
7	22	4	.10 4.92 .10	5.12	20.48	2.98	61.03
8	16	4	4.92 .10 .10	5.12	20.48	1.58	32.36
9	12	2	4.92 .10 .10	5.12	10.24	0.888	9.09
10	12	35	0.82 .22 .12 .20 .20 .12 .22	1.90	66.50	0.888	59.05
							342.86 Kg.

STR.10

Pos.	Φ	No.	FORM	Unit Leng	Total Leng	U.Wt. Kg.	Total weight
1	14	8	0.24 1.98 1.28 1.98 0.24	5.48	43.84	1.21	53.05
2		-		-	-	-	-
3		-		-	-	-	-
4	14	24	1.53 .42 .42	2.37	56.88	1.21	68.82
5	14	4	.07/.30 2.15~2.33 1.36~1.50 2.15~2.33 .07/.30	6.28	25.12	1.21	30.40
6	14	18	0.50 1.64	1.07	19.26	1.21	23.30
7	22	4	.10 4.72 .10	4.92	19.68	2.98	58.65
8	16	4	4.72 .10 .10	4.92	19.68	1.58	31.09
9	12	2	4.72 .10 .10	4.92	9.84	0.888	8.74
10	12	33	0.82 .22 .12 .20 .20 .12 .22	1.90	62.70	0.888	55.68
							329.73 Kg.

STR.12

Pos.	Φ	No.	FORM	Unit Leng	Total Leng	U.Wt. Kg.	Total weight
1	14	10	0.24 2.34 1.28 2.34 0.24	6.20	62.00	1.21	75.02
2	14	10	.10 1.48 .10	1.68	16.80	1.21	20.33
3	14	6	2.02 .20 .20	2.42	14.52	1.21	17.57
4	14	27	1.93 .55 .55	3.03	81.81	1.21	98.99
5	14	4	.07/.30 2.59~2.69 1.36~1.50 2.51~2.69 .07/.30	7.00	28.00	1.21	33.88
6	14	22	0.50~1.46	1.22	26.84	1.21	32.48
7	22	4	.10 5.32 .10	5.52	22.08	2.98	65.80
8	16	4	5.32 .10 .10	5.52	22.08	1.58	34.89
9	12	2	5.32 .10 .10	5.52	11.04	0.888	9.80
10	12	37	0.82 .22 .12 .20 .20 .12 .22	1.90	70.30	0.888	62.43
							451.19 Kg.

STR.14

Pos.	Φ	No.	FORM	Unit Leng	Total Leng	U.Wt. Kg.	Total weight
1	14	7	0.24 1.80 1.48 1.80 0.24	5.32	37.24	1.21	45.06
2		-		-	-	-	-
3		-		-	-	-	-
4	14	23	1.33 .42 .42	2.17	49.91	1.21	60.39
5	14	4	.07/.30 .97~2.15 1.56~1.70 .97~2.15 .07/.30	6.12	24.48	1.21	29.62
6	14	16	0.50~1.49	1.00	16.00	1.21	19.36
7	22	4	.10 4.62 .10	4.82	19.28	2.98	57.45
8	16	4	4.62 .10 .10	4.82	19.28	1.58	30.46
9	12	2	4.62 .10 .10	4.82	9.64	0.888	8.56
10	12	33	0.82 .22 .12 .20 .20 .12 .22	1.90	62.70	0.888	55.68
							306.58 Kg.

STR.16

Pos.	Φ	No.	FORM	Unit Leng	Total Leng	U.Wt. Kg.	Total weight
1	14	9	0.24 2.16 1.48 2.16 0.24	6.04	54.36	1.21	65.78
2	14	9	.10 1.68 .10	1.88	16.92	1.21	20.47
3	14	7	1.82 .20 .20	2.22	15.54	1.21	18.80
4	14	26	1.73 .55 .55	2.83	73.58	1.21	89.03
5	14	4	.07/.30 2.33~2.59 1.56~1.70 2.33~2.59 .07/.30	6.84	27.36	1.21	33.11
6	14	20	0.50~1.79	1.15	23.00	1.21	27.83
7	22	4	.10 5.22 .10	5.42	21.68	2.98	64.61
8	16	4	5.22 .10 .10	5.42	21.68	1.58	34.25
9	12	2	5.22 .10 .10	5.42	10.84	0.888	9.63
10	12	37	0.82 .22 .12 .20 .20 .12 .22	1.90	70.30	0.888	62.43
							425.94 Kg.

REFERENCE DWGS: For reinforcement see dwg. No 12/1/3/01

For bars with variable unit length see note under the same title at dwg. No 20/2/1/01

Scale:	IRRIGATION & DRAINAGE STANDARDS		
Date:	DWG. No 12/1/3/03	CHECK STRUCTURES	
Approved:	Sheet No: 5 of 6	Rev. No	LIST OF REINFORCEMENT STR. 9 TO 16

ISLAMIC REPUBLIC OF IRAN
MINISTRY OF PLAN & BUDJET
TECHNICAL RESEARCH AND STANDARD BUREAU

@omoorepeyman.ir

STR.17

Pos.	Φ	No.	FORM	Unit Leng	Total Leng	U.Wt. Kg.	Total weight
1	14	10	0.24 / 2.34 / 1.48 / 2.34 / 0.24	6.40	64.00	1.21	77.44
2	14	10	.10 / 1.68 / .10	1.88	18.80	1.21	22.75
3	14	7	.20 / 2.02 / .20	2.42	16.94	1.21	20.50
4	14	28	.55 / 1.93 / .55	3.03	84.84	1.21	102.66
5	14	4	.07/.30 / 2.51-2.69 / 1.56~1.70 / 2.51-2.69 / .07/.30	7.20	28.80	1.21	34.85
6	14	22	0.50~1.94	1.22	26.84	1.21	32.48
7	22	4	.10 / 5.52 / .10	5.72	22.88	2.98	68.18
8	16	4	.10 / 5.52 / .10	5.72	22.88	1.58	36.15
9	12	2	.10 / 5.52 / .10	5.72	11.44	0.888	10.16
10	12	39	0.82 / .22 .12 .20 .20 .12 .22	1.90	74.10	0.888	65.80
							470.97 Kg.

STR.19

Pos.	Φ	No.	FORM	Unit Leng	Total Leng	U.Wt. Kg.	Total weight
1	14	8	0.24 / 1.98 / 1.68 / 1.98 / 0.24	5.88	47.04	1.21	56.92
2		-		-	-	-	-
3		-		-	-	-	-
4	14	26	.42 / 1.53 / .42	2.37	61.62	1.21	74.56
5	14	4	.07/.30 / 2.51-2.69 / 1.76~1.90 / 2.15-2.33 / .07/.30	6.68	26.72	1.21	32.33
6	14	18	0.50~1.64	1.07	19.26	1.21	23.30
7	22	4	.10 / 5.12 / .10	5.32	21.28	2.98	63.41
8	16	4	.10 / 5.12 / .10	5.32	21.28	1.58	33.62
9	12	2	.10 / 5.12 / .10	5.32	10.64	0.888	9.45
10	12	36	0.82 / .22 .12 .20 .20 .12 .22	1.90	68.40	0.888	60.74
							354.33 Kg.

STR.21

Pos.	Φ	No.	FORM	Unit Leng	Total Leng	U.Wt. Kg.	Total weight
1	14	10	0.24 / 2.34 / 1.68 / 2.34 / 0.24	6.60	66.00	1.21	79.86
2	14	10	.10 / 1.88 / .10	2.08	20.80	1.21	25.17
3	14	8	.20 / 2.02 / .20	2.42	19.36	1.21	23.43
4	14	28	.55 / 1.93 / .55	3.03	84.84	1.21	102.66
5	14	4	.07/.30 / 2.51-2.69 / 1.76~1.90 / 2.51-2.69 / .07/.30	7.40	29.60	1.21	35.82
6	14	22	0.50~1.94	1.22	26.84	1.21	32.48
7	22	4	.10 / 5.72 / .10	5.92	23.68	2.98	70.57
8	16	4	.10 / 5.72 / .10	5.92	23.68	1.58	37.41
9	12	2	.10 / 5.72 / .10	5.92	11.84	0.888	10.51
10	12	40	0.82 / .22 .12 .20 .20 .12 .22	1.90	76.00	0.888	67.49
							485.40 Kg.

STR.23

Pos.	Φ	No.	FORM	Unit Leng	Total Leng	U.Wt. Kg.	Total weight
1	14	9	0.24 / 2.16 / 1.88 / 2.16 / 0.24	6.44	57.96	1.21	70.13
2	14	9	.10 / 2.08 / .10	2.28	20.52	1.21	24.83
3	14	9	.20 / 1.82 / .20	2.22	19.98	1.21	24.18
4	14	28	.55 / 1.73 / .55	2.83	79.24	1.21	95.88
5	14	4	.07/.30 / 2.33-2.51 / 1.96~2.10 / 2.33-2.51 / .07/.30	7.24	28.96	1.21	35.04
6	14	20	0.50~1.79	1.15	23.00	1.21	27.83
7	22	4	.10 / 5.62 / .10	5.82	23.28	2.98	69.37
8	16	4	.10 / 5.62 / .10	5.82	23.28	1.58	36.78
9	12	2	.10 / 5.62 / .10	5.82	11.64	0.888	10.34
10	12	39	0.82 / .22 .12 .20 .20 .12 .22	1.90	74.10	0.888	65.80
							460.18 Kg.

STR.18

Pos.	Φ	No.	FORM	Unit Leng	Total Leng	U.Wt. kg.	Total weight
1	14	7	0.24 / 1.80 / 1.68 / 1.80 / 0.24	5.52	38.64	1.21	46.75
2		-		-	-	-	-
3		-		-	-	-	-
4	14	24	.42 / 1.33 / .42	2.17	52.08	1.21	63.02
5	14	4	.07/.30 / 1.97-2.15 / 1.76~1.90 / 1.97-2.15 / .07/.30	6.32	25.28	1.21	30.59
6	14	16	0.50~1.49	1.00	16.00	1.21	19.36
7	22	4	.10 / 4.82 / .10	5.02	20.08	2.98	59.84
8	16	4	.10 / 4.82 / .10	5.02	20.08	1.58	31.73
9	12	2	.10 / 4.82 / .10	5.02	10.04	0.888	8.92
10	12	34	0.82 / .22 .12 .20 .20 .12 .22	1.90	64.60	0.888	57.36
							317.57 Kg.

STR.20

Pos.	Φ	No.	FORM	Unit Leng	Total Leng	U.Wt. Kg.	Total weight
1	14	9	0.24 / 2.16 / 1.68 / 2.16 / 0.24	6.24	56.16	1.21	67.95
2	14	9	.10 / 1.88 / .10	2.08	18.72	1.21	22.65
3	14	8	.20 / 1.82 / .20	2.22	17.76	1.21	21.49
4	14	27	.55 / 1.73 / .55	2.83	76.41	1.21	92.46
5	14	4	.07/.30 / 2.33-2.51 / 1.76~1.90 / 2.33-2.51 / .07/.30	7.04	28.16	1.21	34.07
6	14	20	0.50~1.79	1.15	23.00	1.21	27.83
7	22	4	.10 / 5.42 / .10	5.62	22.48	2.98	66.99
8	16	4	.10 / 5.42 / .10	5.62	22.48	1.58	35.52
9	12	2	.10 / 5.42 / .10	5.62	11.24	0.888	9.98
10	12	38	0.82 / .22 .12 .20 .20 .12 .22	1.90	72.20	0.888	64.11
							443.05 Kg.

STR.22

Pos.	Φ	No.	FORM	Unit Leng	Total Leng	U.Wt. Kg.	Total weight
1	14	8	0.24 / 1.98 / 1.68 / 1.98 / 0.24	6.08	48.64	1.21	58.85
2		-		-	-	-	-
3		-		-	-	-	-
4	14	26	.42 / 1.53 / .42	2.37	61.62	1.21	74.56
5	14	4	.07/.30 / 2.51-2.69 / 1.96~2.10 / 2.51-2.69 / .07/.30	6.88	27.52	1.21	33.30
6	14	18	0.50~1.64	1.07	19.26	1.21	23.30
7	22	4	.10 / 5.32 / .10	5.52	22.08	2.98	65.80
8	16	4	.10 / 5.32 / .10	5.52	22.08	1.58	34.89
9	12	2	.10 / 5.32 / .10	5.52	11.04	0.888	9.80
10	12	37	0.82 / .22 .12 .20 .20 .12 .22	1.90	70.30	0.888	62.43
							362.93 Kg.

STR.24

Pos.	Φ	No.	FORM	Unit Leng	Total Leng	U.Wt. Kg.	Total weight
1	14	10	0.24 / 2.34 / 1.88 / 2.34 / 0.24	6.80	68.00	1.21	82.28
2	14	10	.10 / 2.08 / .10	2.28	22.80	1.21	27.59
3	14	9	.20 / 2.02 / .20	2.42	21.78	1.21	26.35
4	14	29	.55 / 1.93 / .55	3.03	87.87	1.21	106.32
5	14	4	.07/.30 / 2.51-2.69 / 1.96~2.10 / 2.51-2.69 / .07/.30	7.60	30.40	1.21	36.78
6	14	22	0.50~1.94	1.22	26.84	1.21	32.48
7	22	4	.10 / 5.92 / .10	6.12	24.48	2.98	72.95
8	16	4	.10 / 5.92 / .10	6.12	24.48	1.58	38.68
9	12	2	.10 / 5.92 / .10	6.12	12.24	0.888	10.87
10	12	41	0.82 / .22 .12 .20 .20 .12 .22	1.90	77.90	0.888	69.18
							503.48 Kg.

REFERENCE DWGS: For reinforcement see dwg. No 12/1/3/01

For bars with variable unit length see note under the same title at dwg. No 20/2/1/01

Scale:	IRRIGATION & DRAINAGE STANDARDS		
Date:	DWG. No 12/1/3/04	CHECK STRUCTURES LIST OF REINFORCEMENT STR. 16 TO 24	ISLAMIC REPUBLIC OF IRAN MINISTRY OF PLAN & BUDJET TECHNICAL RESEARCH AND STANDARD BUREAU
Approved:	Sheet. No: 6 of 6 Rev.No		

@omoorepeyman.ir

NOTES

DESIGN CONSIDERATIONS

1) Inverted siphons are used to convey canal water by gravity under roads, railroads, other structures, various type of drainage channels and depressions.

2) The pipe cover requirements are :

   a) Min. 0.60 m. of earth cover for all siphons crossing under roads and railroads. Back fill should be thoroughly compacted.

   b) Min. 0.90 m. of earth cover for siphons crossing under cross-drainage channels unless studies indicate more cover is required because of projected future retrogressions of the channel.

   c) Min. 0.60 m. of earth cover for siphons crossing under an earth canal.

   d) Min. 0.15 m. of earth cover between the concerete canal lining and the top of pipe, is required.

3) The following siphons require either a concrete inlet transition or some type of concrete outlet transitions:

   a) All siphons crossing under railroads and state highways.

   b) All 0.90 m. diameter and larger pipe siphon crossing roads.

   c) All siphons in unlined canals with water velocities in excess of 1.0 m/s.

   d) If there is a need for controlling the water surface elevation upstream from the siphon a check and pipe inlet or a control and pipe inlet is to be used

4) In general, siphon velocities should range from 1.0 to 3.0 m/s depending on available head. The following velocity criteria may be used in determining the diameter of siphon :

   a) 1.0 m/s or less for a relatively short siphon with only earth transitions provided at inlet and outlet.

   b) 1.5 m/s or less for a relatively short siphon with either a concrete transition or a control structure provided at the inlet and a concrete transition provided at the outlet.

   c) 3.0 m/s or less for a relatively long siphon with either a concrete transition or a control structure provided at the inlet and a concrete transition provided at the outlet.

5) EL.B.is equal to EL.A-head losses. Head losses which should be considered are as follows:

   a) Convergence loss in the inlet transition.

   b) Check structure losses when a check is installed in the inlet.

   c) Control structure losses when a control is installed in the inlet.

   d) Friction and bend losses in the pipe.

   e) Diversion loss in the outlet transition.

   f) Transition friction losses are usually ignored for the size of structures in this publication.

   g) Convergence and divergence head losses in earth transitions when required between the canal and concrete transition are usually small and ignored.

   h) The total computed head loss is usually increased by 10% as a safety factor.

6) a) The hydraulic head loss in transition is dependent on the difference of the velocity heads in the canal and the normal to centerline section of the closed conduit.

   b) Coefficients of velocity head considered adequate for determining head losses in a broken-back type of transition (Concrete transition type 5, dwg. No. 13/11/1/01) shown in this dwg., are 0.4 for the inlet and 0.7 for the outlet.

   c) Coefficients of velocity head considered adequate for determining head losses in earth transitions from the canal to a pipe are 0.5 for the inlet and 1.0 for the outlet.

   d) For min. hydraulic loss, it is desirable to provide a seal of 1.5 h_v, with 0.08 m. minimum at pipe inlet and no submergence at the pipe outlet. The seal is equal in height to vertical drop from the normal canal water surface to the top of the siphon opening. ("S" on section A-A).

   e) If the siphon has both upstream and downstream concrete transitions, it may be economically desirable to construct the D/S transition the same as the upstream transition.

   f) Pipe friction losses are determined by using Manning formula.

   g) Pipe bend losses are determined by using Fig-1.

7) Design procedure :

   a) Determine inlet and outlet structures and approximate size of pipe.

   b) Make a preliminary layout of the siphon and determine L_1, L_2, L_3, α_1 and α_2 cover and submergence requirements.

   c) Compute the siphon head-losses in this layout.

   c-1) If the computed losses are greater than the difference in U/S and D/S canal water surface, the pipe size should be increased or the canal profile revised to provide adequate head.

   c-2) If the computed losses are appreciably less than the difference in U/S canal water surface, it may be possible to decrease the size of pipe, or the canal profile may be revised.

8) When the pipe profile permits vaccum an air vent should be provided, as shown on dwgs. 12/8/1/01 or 12/9/1/01.

Figure I. Head loss coefficients for pipe bends

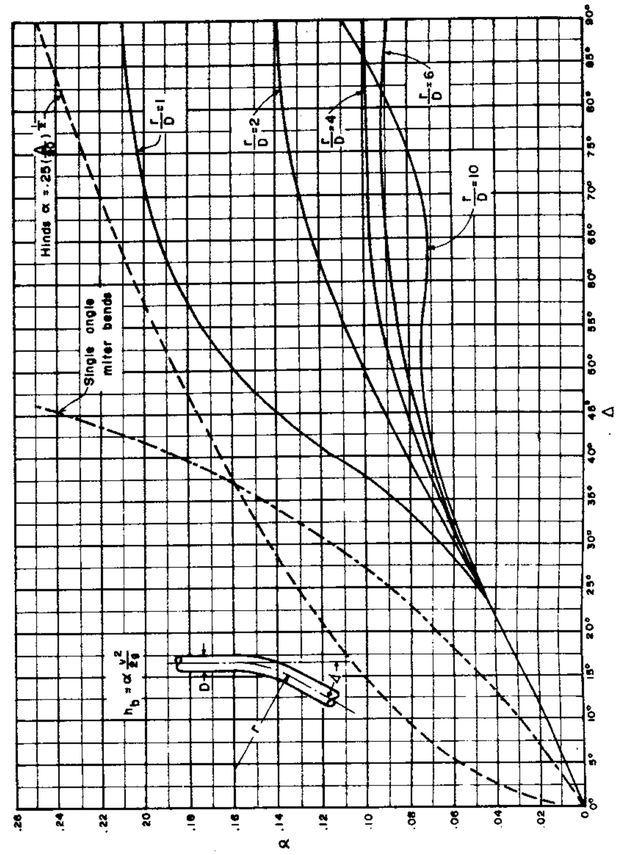

Pipe diameter selection table Q m³/sce						Pipe
V max = 1.00 m/s		V max = 1.50 m/s		V max = 3.00 m/s		D mm
from	to	from	to	from	to	
-	0.008	-	0.012	-	0.024	100
0.008	0.031	0.012	0.047	0.024	0.094	200
0.031	0.049	0.047	0.074	0.094	0.147	250
0.049	0.071	0.074	0.106	0.147	0.212	300
0.071	0.096	0.106	0.144	0.212	0.289	350
0.096	0.126	0.144	0.188	0.289	0.377	400
0.126	0.159	0.188	0.239	0.377	0.477	450
0.159	0.196	0.239	0.295	0.477	0.589	500
0.196	0.282	0.295	0.424	0.589	0.848	600
0.282	0.385	0.424	0.577	0.848	1.155	700
0.385	0.503	0.577	0.754	1.155	1.508	800
0.503	0.636	0.754	0.954	1.508	1.909	900
0.636	0.785	0.954	1.178	1.909	2.356	1000
0.785	1.131	1.178	1.696	2.336	3.393	1200
1.131	1.539	1.696	2.309	3.393	4.618	1400
1.539	2.011	2.309	3.016	4.618	6.032	1600
2.011	2.545	3.016	3.817	6.032	7.634	1800
2.545	3.142	3.817	4.712	7.634	9.425	2000

REFERENCE DWGS.

Scale:	IRRIGATION & DRAINAGE STANDARDS		
Date:	DWG.№ 11/6/1/02	INVERTED SIPHON AND ROAD CROSSING DESIGN CONSIDERTIONS	ISLAMIC REPUBLIC OF IRAN MINISTRY OF PLAN & BUDJET TECHNICAL RESEARCH AND STANDARD BUREAU
Approved:	Sheet №2 1 of 2	Rev.№	

@omoorepeyman.ir

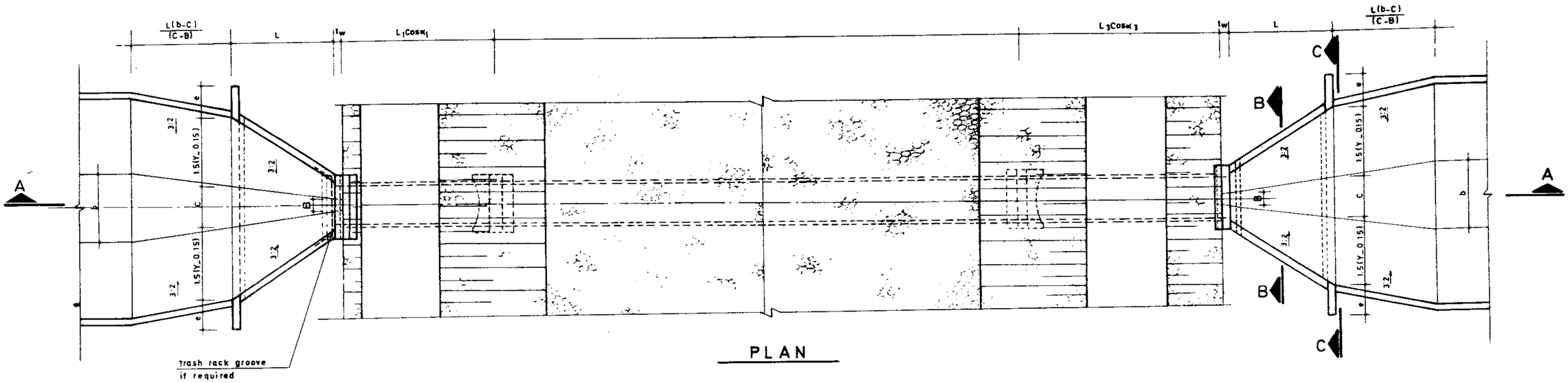

PLAN

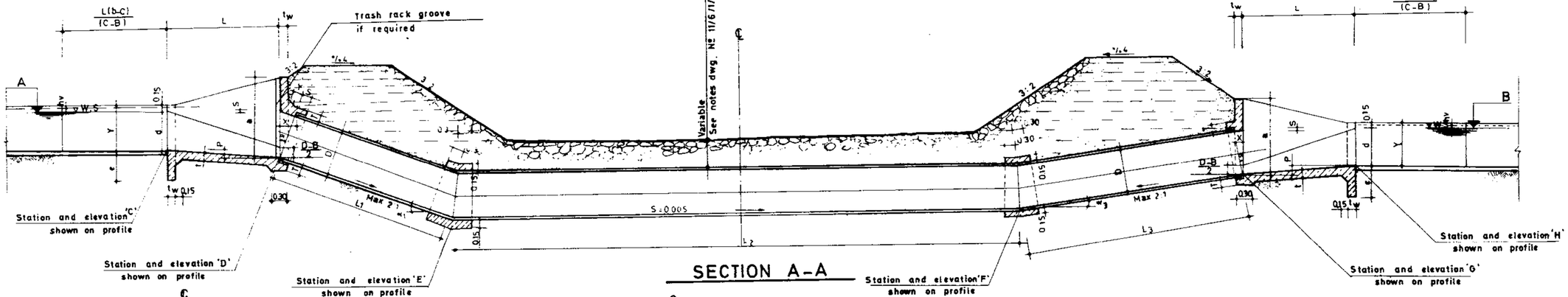

SECTION A-A

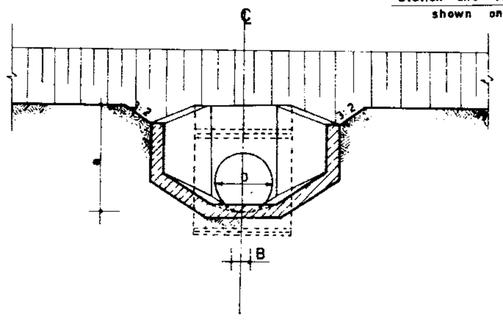

SECTION B-B

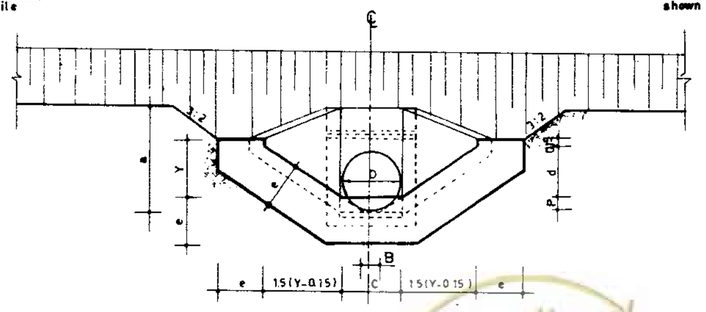

SECTION C-C

REFERENCE DWGS: For detail dimension of transition see dwg. Nº 13/7/1/01 to 13/12/1/01
For hydraulic information of pipes and calculation of head losses see dwg. Nº 1[illegible]/1/02
For detail pipe connection to structures see dwgs. Nº 17/1/1/01 to 17/1/1/01

Scale: N.T.S.	IRRIGATION & DRAINAGE STANDARDS		ISLAMIC REBUBLIC OF IRAN
Date:	DWG Nº 11/6/1/01	INVERTED SIPHON (TYPICAL POSITION)	MINISTRY OF PLAN & BUD.
Approved:	Sheet Nº 2 of 2	Rev. Nº	PLAN & SECTION	TECHNICAL RESEARCH AND STANDARD BUREAU

omoorepeyman.ir

NOTES

1. Road crossing conduit may have a straight line profile as shown in this dwg. or a profile with vertical bends which function either as inverted siphons, drops or chutes.
2. Road crossing with straight line profile is designed for flow with little or no internal hydrostatic pressure.
3. For pipe selection see dwg. Nº. 11/6/1/01 and considered:
   a) A maximum allowable velocity of 1.0m/sec for a pipe with earth transitions.
   b) A maximum allowable velocity of 1.5m/sec for a pipe with concrete transitions or other concrete inlet and outlet structures.
4. If there is a need for controlling the water surface elevation upstream from the road crossing, a check inlet or a control inlet is used. If one of these structures is required, it is usually economically desirable to also use a concrete outlet structure and size the pipe based on a maximum velocity of 1.5 m/sec.

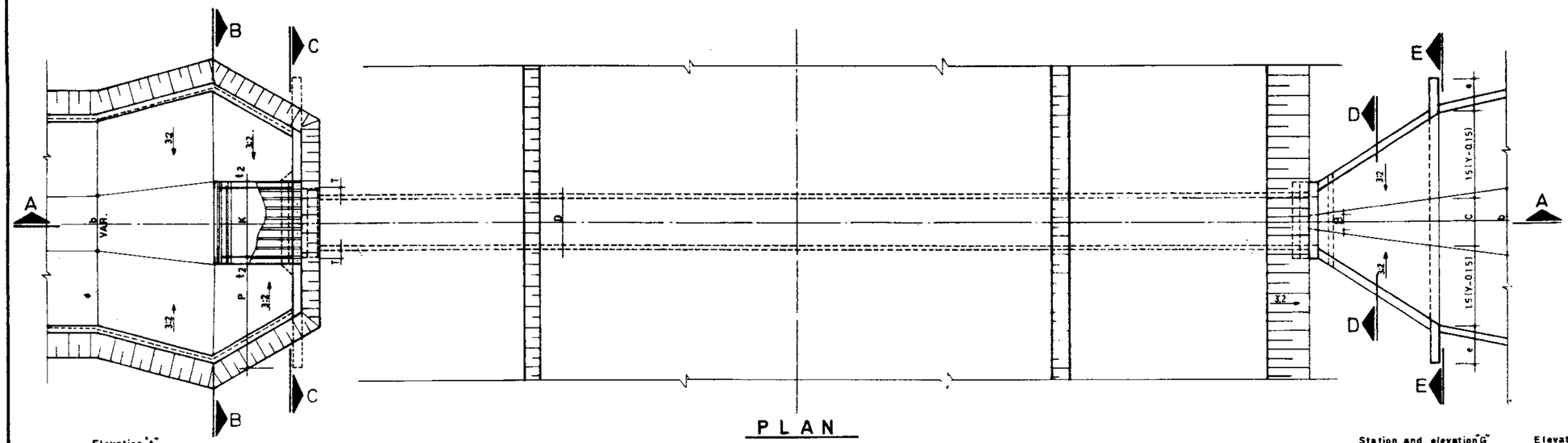

PLAN

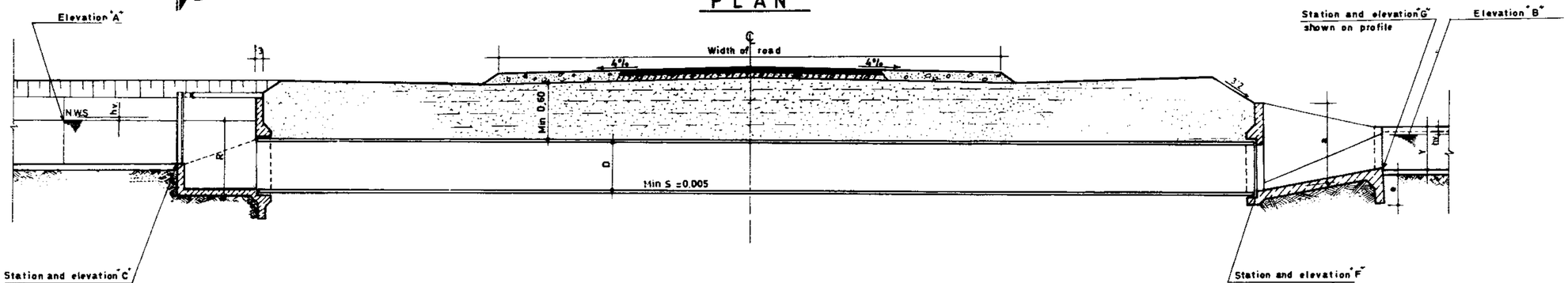

SECTION A_A

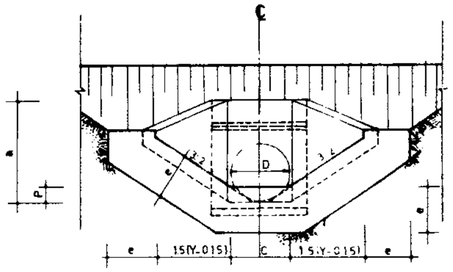

SECTION E_E

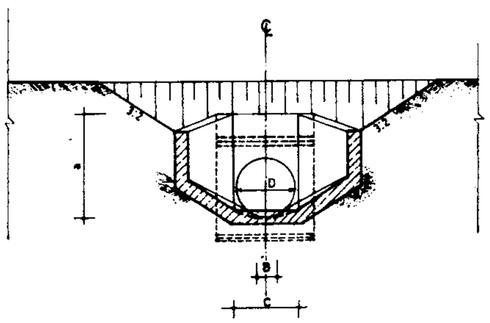

SECTION D_D

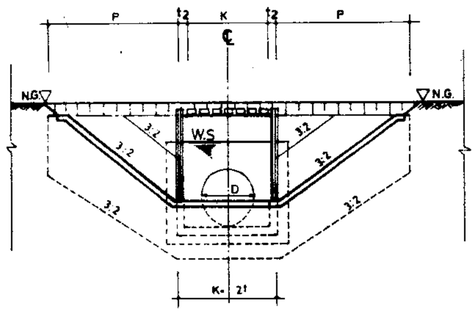

SECTION B_B

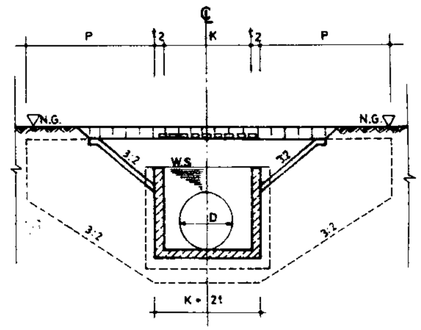

SECTION C_C

REFERENCE DWGS:
For detail & dimension of check see dwg. Nº. 12/6/1/02
For detail & dimension of transition see dwgs. Nº. 13/6/1/01 TO 13/10/1/01
For hydraulic information of pipes and calculation of headlosses see dwg. Nº. 11/6/1/01
For detail of pipe connection to structures see dwgs. Nº. 17/1/1/01 TO 17/1/1/03

Scale: N.T.S.	IRRIGATION & DRAINAGE STANDARDS		ISLAMIC REPUBLIC OF IRAN MINISTRY OF PLAN & BUDJET TECHNICAL RESEARCH AND STANDARD BUREAU
Date:	DWG. Nº. 11/5/1/01	ROAD CROSSING - (TYPICAL POSITION) PLAN & SECTION	
Approved:	Sheet Nº. 1 of 1	Rev. Nº.	

omoorepeyman.ir

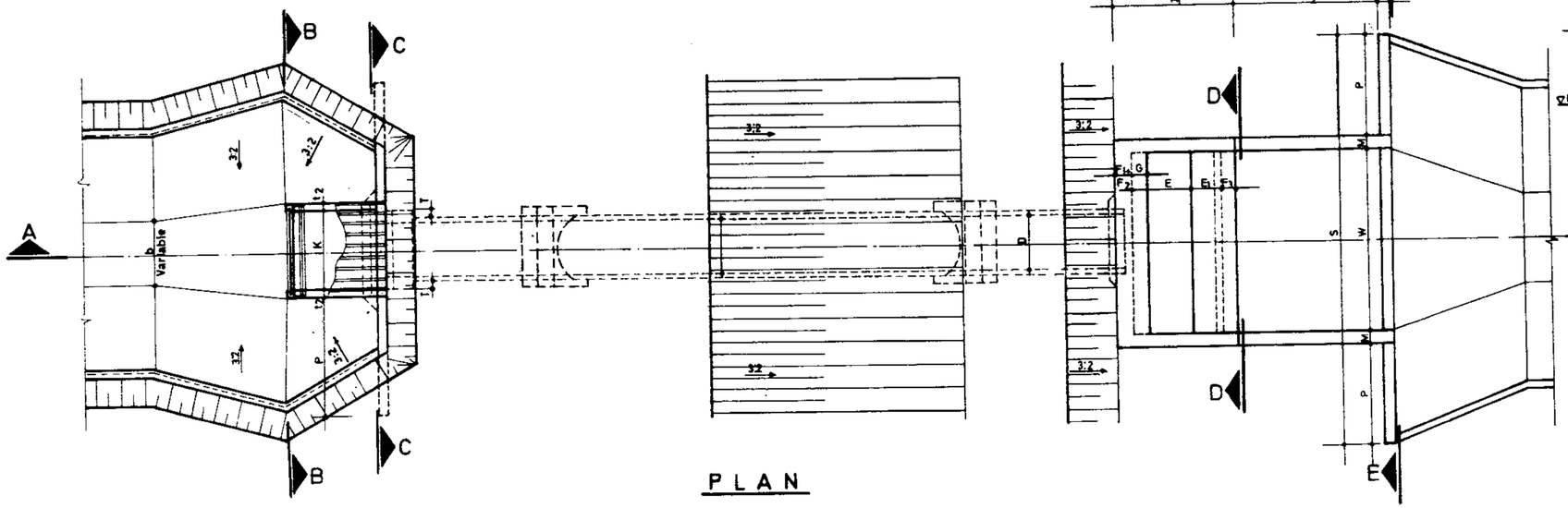

PLAN

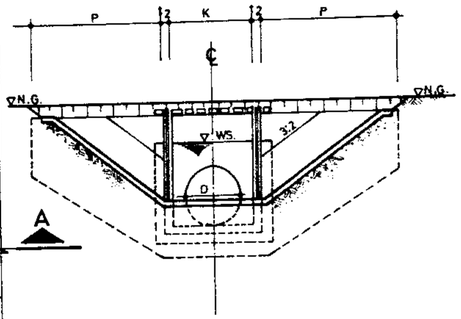

SECTION B_B

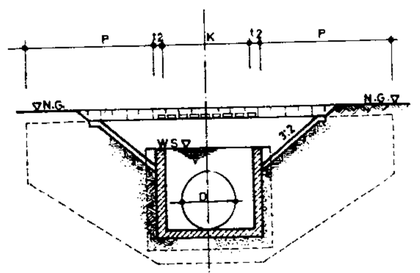

SECTION C_C

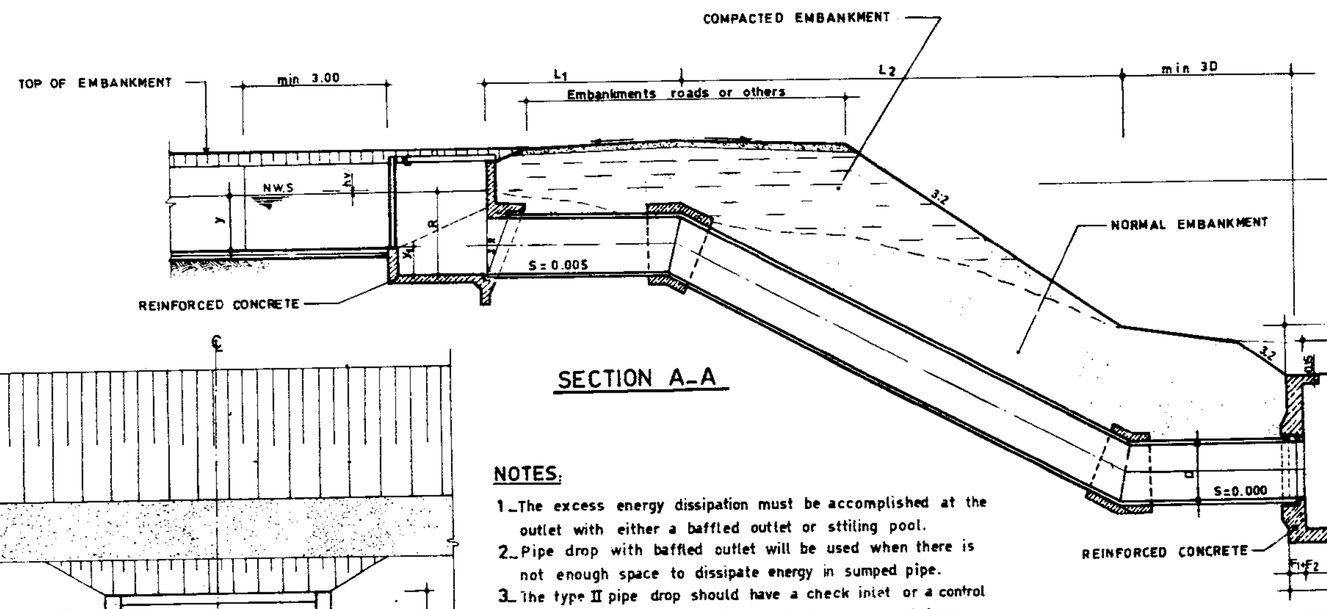

SECTION A_A

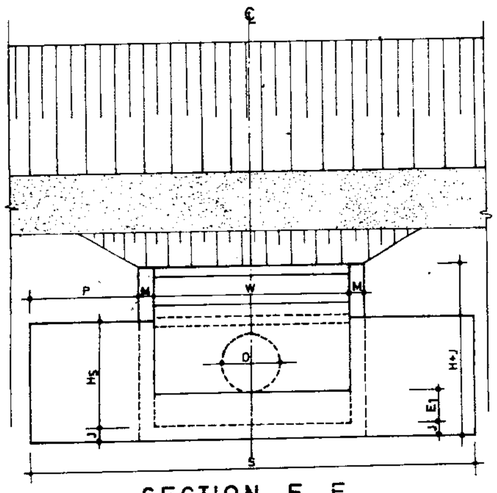

SECTION E_E

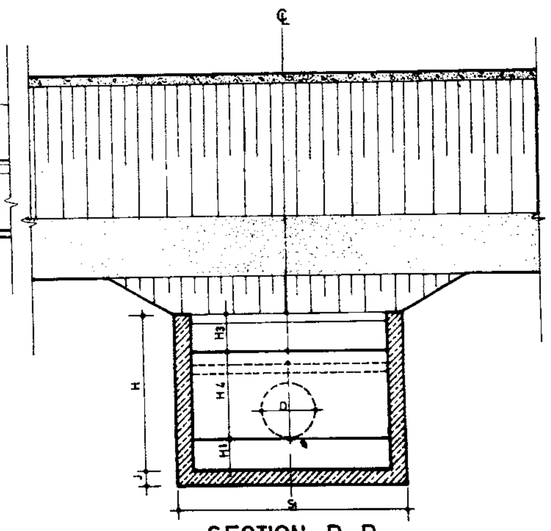

SECTION D_D

NOTES:

1_The excess energy dissipation must be accomplished at the outlet with either a baffled outlet or sttiling pool.
2_Pipe drop with baffled outlet will be used when there is not enough space to dissipate energy in sumped pipe.
3_The type II pipe drop should have a check inlet or a control inlet if the drop in an inline canal structure and have a reinforced concrete inlet transition (type 1,2,3 or 4) if is a cross-drainage structure.
4_The maximum full pipe velocity is 3/5 m/sec.
5_L_1 and L_2 must be calculated on field conditions.

Q m^3/sec		PIPE	
V_{max} = 3.50 m/s		D	A
FROM	TO	mm	m^2
0.337	0.440	400	0.1257
0.440	0.557	450	0.1590
0.557	0.687	500	0.1963
0.687	0.990	600	0.2827
0.990	1.347	700	0.3848
1.347	1.759	800	0.5027
1.759	2.227	900	0.6362
2.227	2.749	1000	0.7854
2.749	3.958	1200	1.1310

REFERENCE DWGS.
1_FOR DIMENSIONS AND DETAIL OF INLET STRUCTURE SEE DWGS Nº 13/6/1/01., 13/7/1/01 , 13/8/1/01. 13/9/1/01 _ 12/6/1/02 _ 12/5/1/01
2_FOR DIMENSIONS AND DETAIL OF BAFFLED OUTLET SEE DWG Nº 16/1/1/01
3_FOR DIMENSIONS AND DETAIL OF PIPE JUNCTION SEE DWG Nº 17/1/1/01 TO 17/1/1/03

Scale: N.T.S	IRRIGATION & DRAINAGE STANDARDS		
Date:	DWG. Nº 11/4/1/01		PIPE DROP TYPE II WITH BAFFLED OUTLET
Approved:	Sheet Nº 1 of 1	Rev.Nº	

ISLAMIC REPUBLIC OF IRAN
MINISTRY OF PLAN & BUDJE
TECHNICAL RESEARCH AND STANDARD BUREAU

omoorepeyman.ir

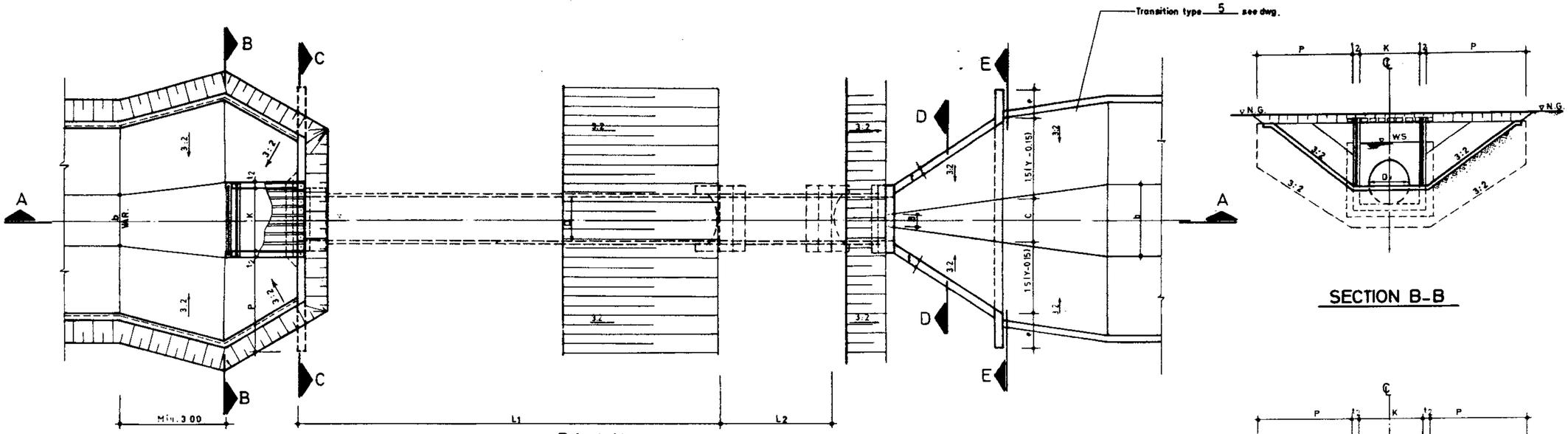

PLAN

SECTION B-B

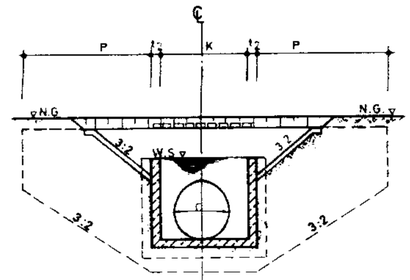

SECTION C-C

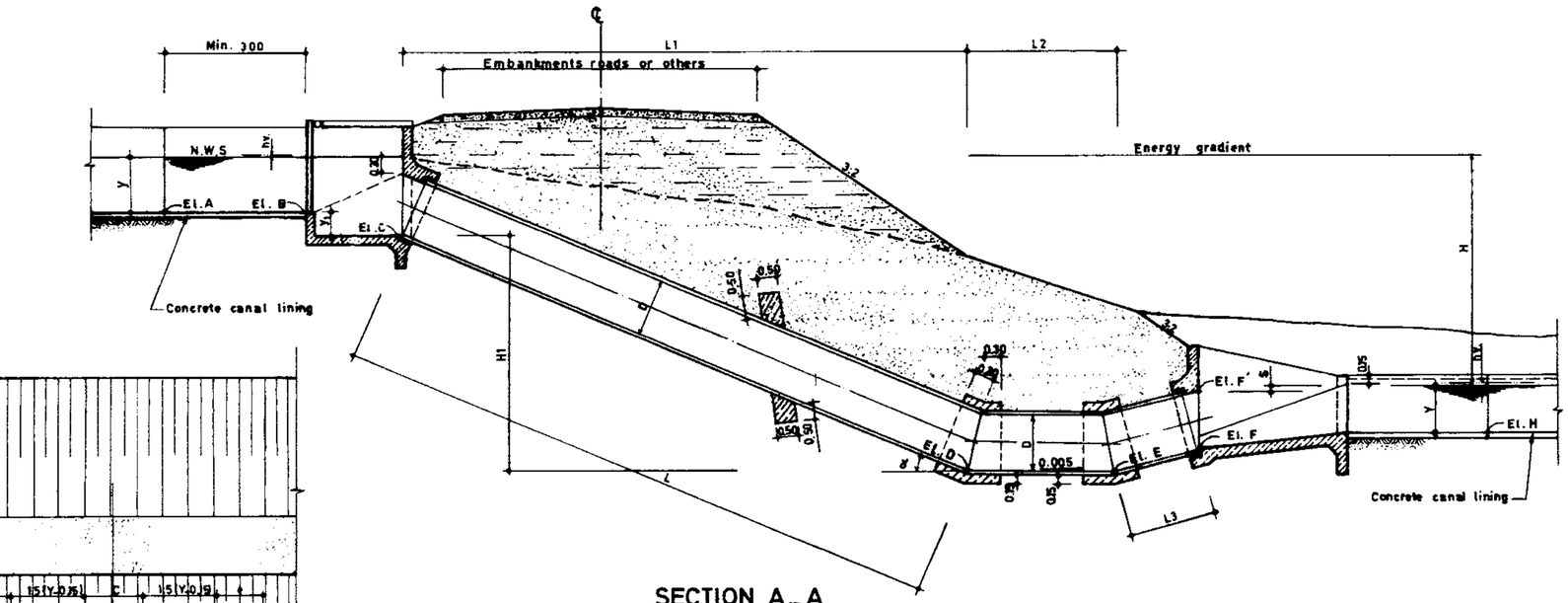

SECTION A-A

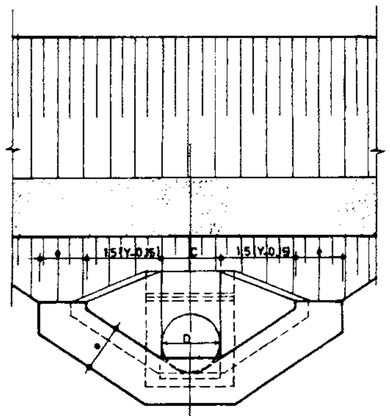

SECTION E-E

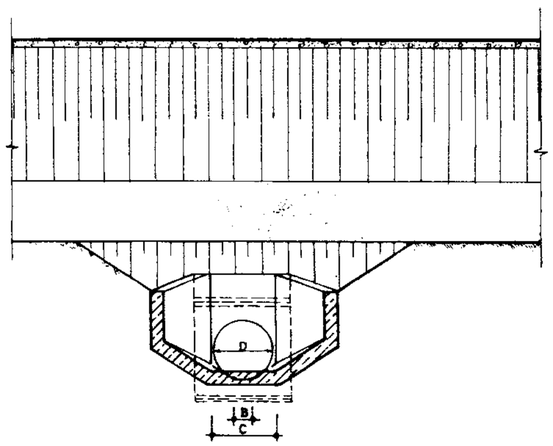

SECTION D-D

REFERENCE DWGS: For detail & dimension of inlet structure see dwg. Nº 12/6/1/02
For outlet transition see dwg. Nº 13/6/1/01
For detail hydraulic information see pipe drop with earth outlet transition computer table see dwg. Nº 13/6/1/
For pipe construction dimensions see dwgs. Nº 11/3/2/01 TO 11/3/2/18

Scale: N.T.S	IRRIGATION & DRAINAGE STANDARDS		ISLAMIC REPUBLIC OF IRAN MINISTRY OF PLAN & BUDJET TECHNICAL RESEARCH AND STANDARD BUREAU
Date:	DWG.Nº. 11/3/1/01	PIPE DROP TYPE I WITH CONCRETE OUTLET TRANSITION PLAN & SECTION	
Approved:	Sheet Nº. 1 of 19 Rev.Nº.		

omoorepeyman.ir

TABLE # PDC.01 (Q = 0.100 M^3/S , D = 400 mm , R = 0.80 m)

| | | |

TABLE # PDC 05 (Q=0.175 M^3/S , D= 450 mm , R=0.80 m)

| | | |

TABLE # PDC 09 (Q = 0.225 M^3/S , D = 500 mm , R = 0.90 m)

H (m)	0.69	0.77	0.84	0.92	0.99	1.07	1.14	1.22	1.30	1.38	1.45	1.53	1.61	1.69	1.77	1.85	1.93	2.01	2.09	2.17	2.25	2.33	2.41	2.49	2.58	2.66	2.74	2.82	2.90	2.99	3.07	3.15	3.23	3.32	3.40	3.48	3.57	3.65	3.73	3.82	3.90	3.99	4.07	4.15	4.24	4.32	4.41	4.49	4.58	4.66	4.74	4.83	4.91	5.00	5.08	5.17
L (m)	1.75	2.00	2.25	2.50	2.75	3.00	3.25	3.50	3.75	4.00	4.25	4.50	4.75	5.00	5.25	5.50	5.75	6.00	6.25	6.50	6.75	7.00	7.25	7.50	7.75	8.00	8.25	8.50	8.75	9.00	9.25	9.50	9.75	10.00	10.25	10.50	10.75	11.00	11.25	11.50	11.75	12.00	12.25	12.50	12.75	13.00	13.25	13.50	13.75	14.00	14.25	14.50	14.75	15.00	15.25	15.50
L1 (m)	1.62	1.85	2.08	2.31	2.54	2.77	3.00	3.23	3.46	3.70	3.93	4.16	4.39	4.62	4.85	5.08	5.31	5.54	5.77	6.00	6.24	6.47	6.70	6.93	7.16	7.39	7.62	7.85	8.08	8.31	8.55	8.78	9.01	9.24	9.47	9.70	9.93	10.16	10.39	10.62	10.86	11.09	11.32	11.55	11.78	12.01	12.24	12.47	12.70	12.93	13.16	13.40	13.63	13.86	14.09	14.32
L2(m)	2.50	2.50	2.50	2.50	2.50	2.50	2.50	2.50	2.50	2.50	2.50	2.50	2.80	2.90	2.90	3.00	3.00	3.10	3.10	3.20	3.00	3.00	3.10	3.10	3.20	3.20	3.30	3.30	3.40	3.10	3.20	3.20	3.30	3.30	3.30	3.40	3.40	3.50	3.20	3.30	3.30	3.40	3.40	3.40	3.50	3.50	3.50	3.60	3.60	3.60	3.40	3.40	3.50	3.50	3.50	3.60	3.60
L3(m)	0.90	0.90	0.90	0.90	1.20	1.20	1.20	1.20	1.50	1.50	1.50	1.50	1.20	1.20	1.20	1.20	1.20	1.20	1.20	1.20	1.50	1.50	1.50	1.50	1.50	1.50	1.50	1.50	1.50	1.80	1.80	1.80	1.80	1.80	1.80	1.80	1.80	1.80	2.10	2.10	2.10	2.10	2.10	2.10	2.10	2.10	2.10	2.10	2.10	2.10	2.40	2.40	2.40	2.40	2.40	2.40	2.40
H1(m)	0.67	0.76	0.86	0.96	1.05	1.15	1.24	1.34	1.43	1.53	1.63	1.72	1.82	1.91	2.01	2.10	2.20	2.30	2.39	2.49	2.58	2.68	2.77	2.87	2.97	3.06	3.16	3.25	3.35	3.44	3.54	3.63	3.73	3.83	3.92	4.02	4.11	4.21	4.30	4.40	4.50	4.59	4.69	4.78	4.88	4.97	5.07	5.17	5.26	5.36	5.45	5.55	5.64	5.74	5.84	5.93
S (m)	0.15	0.17	0.19	0.21	0.15	0.17	0.19	0.21	0.15	0.17	0.18	0.20	0.12	0.14	0.16	0.17	0.19	0.21	0.22	0.24	0.13	0.14	0.16	0.17	0.18	0.20	0.21	0.23	0.24	0.13	0.14	0.15	0.17	0.18	0.19	0.21	0.22	0.23	0.12	0.13	0.14	0.15	0.16	0.18	0.19	0.20	0.21	0.22	0.23	0.12	0.13	0.14	0.15	0.16	0.17	0.18
ϑ (DEG)	15.00	15.00	15.00	15.00	15.00	15.00	15.00	15.00	15.00	15.00	15.00	15.00	22.50	22.50	22.50	22.50	22.50	22.50	22.50	22.50	22.50	22.50	22.50	22.50	22.50	22.50	22.50	22.50	22.50	22.50	22.50	22.50	22.50	22.50	22.50	22.50	22.50	22.50	22.50	22.50	22.50	22.50	22.50	22.50	22.50	22.50	22.50	22.50	22.50	22.50	22.50	22.50	22.50	22.50	22.50	22.50

TABLE # PDC 10 (Q = 0.250 M^3/S , D = 450 mm , R = 0.80 m)

H (m)	0.47	0.53	0.60	0.66	0.73	0.80	0.87	0.93	1.00	1.07	1.15	1.22	1.29	1.36	1.43	1.51	1.58	1.65	1.73	1.80	1.88	1.95	2.03	2.10	2.18	2.26	2.33	2.41	2.49	2.57	2.64	2.72	2.80	2.88	2.95	3.03	3.11	3.19	3.27	3.35	3.43	3.51	3.59	3.67	3.75	3.83	3.91	3.99	4.07	4.15	4.23	4.31	4.39	4.47	4.55	4.63
L (m)	1.75	2.00	2.25	2.50	2.75	3.00	3.25	3.50	3.75	4.00	4.25	4.50	4.75	5.00	5.25	5.50	5.75	6.00	6.25	6.50	6.75	7.00	7.25	7.50	7.75	8.00	8.25	8.50	8.75	9.00	9.25	9.50	9.75	10.00	10.25	10.50	10.75	11.00	11.25	11.50	11.75	12.00	12.25	12.50	12.75	13.00	13.25	13.50	13.75	14.00	14.25	14.50	14.75	15.00	15.25	15.50
L1 (m)	1.62	1.85	2.08	2.31	2.54	2.77	3.00	3.23	3.46	3.70	3.93	4.16	4.39	4.62	4.85	5.08	5.31	5.54	5.77	6.00	6.24	6.47	6.70	6.93	7.16	7.39	7.62	7.85	8.08	8.31	8.55	8.78	9.01	9.24	9.47	9.70	9.93	10.16	10.39	10.62	10.86	11.09	11.32	11.55	11.78	12.01	12.24	12.47	12.70	12.93	13.16	13.40	13.63	13.86	14.09	14.32
L2 (m)	2.25	2.25	2.40	2.50	2.60	2.70	2.50	2.60	2.70	2.80	2.90	2.70	2.80	2.90	3.00	3.00	3.10	2.90	3.00	3.10	3.10	3.20	3.00	3.00	3.10	3.20	3.30	3.30	3.40	3.20	3.20	3.30	3.40	3.40	3.50	3.50	3.30	3.40	3.40	3.50	3.60	3.60	3.70	3.40	3.50	3.50	3.60	3.70	3.70	3.80	3.80	3.90	3.60	3.70	3.70	3.80
L3(m)	1.50	1.50	1.20	1.20	1.20	1.20	1.50	1.50	1.50	1.50	1.50	1.80	1.80	1.80	1.80	1.80	1.80	2.10	2.10	2.10	2.10	2.10	2.40	2.40	2.40	2.40	2.40	2.40	2.40	2.70	2.70	2.70	2.70	2.70	2.70	2.70	3.00	3.00	3.00	3.00	3.00	3.00	3.00	3.30	3.30	3.30	3.30	3.30	3.30	3.30	3.30	3.30	3.60	3.60	3.60	3.60
H1 (m)	0.67	0.76	0.86	0.96	1.05	1.15	1.24	1.34	1.43	1.53	1.63	1.72	1.82	1.91	2.01	2.10	2.20	2.30	2.39	2.49	2.58	2.68	2.77	2.87	2.97	3.06	3.16	3.25	3.35	3.44	3.54	3.63	3.73	3.83	3.92	4.02	4.11	4.21	4.30	4.40	4.50	4.59	4.69	4.78	4.88	4.97	5.07	5.17	5.26	5.36	5.45	5.55	5.64	5.74	5.84	5.93
S (m)	0.16	0.19	0.13	0.16	0.19	0.22	0.12	0.15	0.17	0.20	0.22	0.12	0.15	0.17	0.19	0.22	0.24	0.14	0.16	0.18	0.20	0.22	0.12	0.14	0.16	0.17	0.19	0.21	0.23	0.13	0.14	0.16	0.18	0.20	0.22	0.23	0.13	0.14	0.16	0.18	0.19	0.21	0.23	0.12	0.13	0.15	0.16	0.18	0.20	0.21	0.23	0.24	0.13	0.15	0.16	0.18
ϑ (DEG)	15.00	15.00	22.50	22.50	22.50	22.50	22.50	22.50	22.50	22.50	22.50	22.50	22.50	22.50	22.50	22.50	22.50	22.50	22.50	22.50	22.50	22.50	22.50	22.50	22.50	22.50	22.50	22.50	22.50	22.50	22.50	22.50	22.50	22.50	22.50	22.50	22.50	22.50	22.50	22.50	22.50	22.50	22.50	22.50	22.50	22.50	22.50	22.50	22.50	22.50	22.50	22.50	22.50	22.50	22.50	22.50

TABLE # PDC 11 (Q = 0.250 M^3/S , D = 500 mm , R = 0.90 m)

H (m)	0.64	0.71	0.78	0.85	0.92	1.00	1.07	1.15	1.22	1.30	1.37	1.45	1.53	1.60	1.68	1.76	1.84	1.92	1.99	2.07	2.15	2.23	2.31	2.39	2.47	2.55	2.63	2.71	2.79	2.87	2.96	3.04	3.12	3.20	3.28	3.36	3.44	3.53	3.61	3.69	3.77	3.86	3.94	4.02	4.11	4.19	4.27	4.35	4.44	4.52	4.60	4.69	4.77	4.86	4.94	5.02
L (m)	1.75	2.00	2.25	2.50	2.75	3.00	3.25	3.50	3.75	4.00	4.25	4.50	4.75	5.00	5.25	5.50	5.75	6.00	6.25	6.50	6.75	7.00	7.25	7.50	7.75	8.00	8.25	8.50	8.75	9.00	9.25	9.50	9.75	10.00	10.25	10.50	10.75	11.00	11.25	11.50	11.75	12.00	12.25	12.50	12.75	13.00	13.25	13.50	13.75	14.00	14.25	14.50	14.75	15.00	15.25	15.50
L1 (m)	1.62	1.85	2.08	2.31	2.54	2.77	3.00	3.23	3.46	3.70	3.93	4.16	4.39	4.62	4.85	5.08	5.31	5.54	5.77	6.00	6.24	6.47	6.70	6.93	7.16	7.39	7.62	7.85	8.08	8.31	8.45	8.78	9.01	9.24	9.47	9.70	9.93	10.16	10.39	10.62	10.86	11.09	11.32	11.55	11.78	12.01	12.24	12.47	12.70	12.93	13.16	13.40	13.63	13.86	14.09	14.32
L2(m)	2.50	2.50	2.50	2.50	2.50	2.50	2.50	2.50	2.80	2.80	2.90	3.00	3.00	3.10	2.90	2.90	3.00	3.10	3.10	3.20	3.30	3.00	3.10	3.10	3.20	3.20	3.30	3.40	3.40	3.50	3.20	3.30	3.30	3.40	3.40	3.50	3.50	3.60	3.30	3.40	3.40	3.50	3.50	3.60	3.60	3.60	3.70	3.70	3.50	3.50	3.60	3.60	3.70	3.70	3.70	3.80
L3(m)	0.90	1.20	1.20	1.20	1.50	1.50	1.50	1.50	1.20	1.20	1.20	1.20	1.20	1.20	1.50	1.50	1.50	1.50	1.50	1.50	1.50	1.80	1.80	1.80	1.80	1.80	1.80	1.80	1.80	1.80	2.10	2.10	2.10	2.10	2.10	2.10	2.10	2.40	2.40	2.40	2.40	2.40	2.40	2.40	2.40	2.40	2.40	2.70	2.70	2.70	2.70	2.70	2.70	2.70	2.70	2.70
H1(m)	0.67	0.76	0.86	0.96	1.05	1.15	1.24	1.34	1.43	1.53	1.63	1.72	1.82	1.91	2.01	2.10	2.20	2.30	2.39	2.49	2.58	2.68	2.77	2.87	2.97	3.06	3.16	3.25	3.35	3.44	3.54	3.63	3.73	3.83	3.92	4.02	4.11	4.21	4.30	4.40	4.50	4.59	4.69	4.78	4.88	4.97	5.07	5.17	5.26	5.36	5.45	5.55	5.64	5.74	5.84	5.93
S (m)	0.20	0.15	0.17	0.20	0.14	0.16	0.18	0.20	0.13	0.15	0.17	0.19	0.21	0.23	0.12	0.14	0.16	0.17	0.19	0.21	0.23	0.12	0.13	0.15	0.16	0.18	0.20	0.21	0.23	0.24	0.13	0.14	0.16	0.17	0.19	0.20	0.22	0.23	0.12	0.13	0.14	0.16	0.17	0.18	0.20	0.21	0.22	0.23	0.12	0.13	0.15	0.16	0.17	0.18	0.19	0.21
ϑ (DEG)	15.00	15.00	15.00	15.00	15.00	15.00	15.00	15.00	22.50	22.50	22.50	22.50	22.50	22.50	22.50	22.50	22.50	22.50	22.50	22.50	22.50	22.50	22.50	22.50	22.50	22.50	22.50	22.50	22.50	22.50	22.50	22.50	22.50	22.50	22.50	22.50	22.50	22.50	22.50	22.50	22.50	22.50	22.50	22.50	22.50	22.50	22.50	22.50	22.50	22.50	22.50	22.50	22.50	22.50	22.50	22.50

TABLE # PDC 12 (Q = 0.275 M^3/S , D = 500 mm , R = 0.90 m)

H (m)	0.58	0.65	0.72	0.79	0.86	0.93	1.00	1.07	1.15	1.22	1.30	1.37	1.45	1.52	1.60	1.67	1.75	1.82	1.90	1.98	2.06	2.13	2.21	2.29	2.37	2.45	2.53	2.61	2.68	2.76	2.84	2.92	3.00	3.08	3.16	3.24	3.33	3.41	3.49	3.57	3.65	3.73	3.81	3.89	3.97	4.06	4.14	4.22	4.30	4.39	4.47	4.55	4.63	4.71	4.80	4.88
L (m)	1.75	2.00	2.25	2.50	2.75	3.00	3.25	3.50	3.75	4.00	4.25	4.50	4.75	5.00	5.25	5.50	5.75	6.00	6.25	6.50	6.75	7.00	7.25	7.50	7.75	8.00	8.25	8.50	8.75	9.00	9.25	9.50	9.75	10.00	10.25	10.50	10.75	11.00	11.25	11.50	11.75	12.00	12.25	12.50	12.75	13.00	13.25	13.50	13.75	14.00	14.25	14.50	14.75	15.00	15.25	15.50
L1(m)	1.62	1.85	2.08	2.31	2.54	2.77	3.00	3.23	3.46	3.70	3.93	4.16	4.39	4.62	4.85	5.08	5.31	5.54	5.77	6.00	6.24	6.47	6.70	6.93	7.16	7.39	7.62	7.85	8.08	8.31	8.55	8.78	9.01	9.24	9.47	9.70	9.93	10.16	10.39	10.62	10.86	11.09	11.32	11.55	11.78	12.01	12.24	12.47	12.70	12.93	13.16	13.40	13.63	13.86	14.09	14.32
L2(m)	2.50	2.50	2.50	2.50	2.50	2.70	2.80	2.90	3.00	3.00	2.80	2.90	3.00	3.10	3.10	3.20	3.00	3.00	3.10	3.20	3.20	3.30	3.40	3.10	3.20	3.30	3.30	3.40	3.40	3.50	3.30	3.30	3.40	3.40	3.50	3.50	3.60	3.60	3.70	3.50	3.50	3.60	3.60	3.70	3.70	3.80	3.80	3.60	3.60	3.70	3.70	3.80	3.80	3.90	3.90	3.90
L3(m)	1.20	1.20	1.50	1.50	1.50	1.20	1.20	1.20	1.20	1.20	1.50	1.50	1.50	1.50	1.50	1.50	1.80	1.80	1.80	1.80	1.80	1.80	1.80	2.10	2.10	2.10	2.10	2.10	2.10	2.10	2.40	2.40	2.40	2.40	2.40	2.40	2.40	2.40	2.40	2.70	2.70	2.70	2.70	2.70	2.70	2.70	2.70	3.00	3.00	3.00	3.00	3.00	3.00	3.00	3.00	3.00
H1(m)	0.67	0.76	0.86	0.96	1.05	1.15	1.24	1.34	1.43	1.53	1.63	1.72	1.82	1.91	2.01	2.10	2.20	2.30	2.39	2.49	2.58	2.68	2.77	2.87	2.97	3.06	3.16	3.25	3.35	3.44	3.54	3.63	3.73	3.83	3.92	4.02	4.11	4.21	4.30	4.40	4.50	4.59	4.69	4.78	4.88	4.97	5.07	5.17	5.26	5.36	5.45	5.55	5.64	5.74	5.84	5.93
S (m)	0.18	0.21	0.15	0.18	0.20	0.13	0.16	0.18	0.20	0.23	0.12	0.14	0.17	0.19	0.21	0.23	0.12	0.14	0.16	0.18	0.20	0.21	0.23	0.12	0.14	0.16	0.18	0.19	0.21	0.23	0.12	0.13	0.15	0.17	0.18	0.20	0.21	0.23	0.24	0.13	0.15	0.16	0.17	0.19	0.20	0.21	0.23	0.24	0.25	0.13	0.15	0.16	0.17	0.19	0.20	0.21
ϑ (DEG)	15.00	15.00	15.00	15.00	15.00	22.50	22.50	22.50	22.50	22.50	22.50	22.50	22.50	22.50	22.50	22.50	22.50	22.50	22.50	22.50	22.50	22.50	22.50	22.50	22.50	22.50	22.50	22.50	22.50	22.50	22.50	22.50	22.50	22.50	22.50	22.50	22.50	22.50	22.50	22.50	22.50	22.50	22.50	22.50	22.50	22.50	22.50	22.50	22.50	22.50	22.50	22.50	22.50	22.50	22.50	22.50

REFERFNCE DWGS: For plan & section see dwg.№.11/3/1/01
For general notes see dwgs.№. 20/2/1/01 TO 20/2/1/03

Scale:	IRRIGATION & DRAINAGE STANDARDS		
Date:	DWG. №. 11/3/2/03		PIPE DROP TYPE I WITH CONCRETE OUTLET TRANSITION (PIPE CONSTRUCTION DIMENSIONS)
Approved:	Sheet №.4 of 19	Rev. №.	

ISLAMIC REPUBLIC OF IRAN
MINISTRY OF PLAN & BUD
TECHNICAL RESEARCH AND STANDARD BUREAU

omoorepeyman.ir

TABLE # PDC 13 (Q=0.300M³/S , D= 500 mm , R=0.90 m)

| | | |

TABLE # PDC 17 (Q=0.375 M^3/S , D= 600 mm , R= 1.00 m)

| | | |

TABLE # PDC 21 (Q =0.425 M^3/S , D= 700 mm , R=1.10 m)

| | | |

TABLE # PDC 25 (Q=0.525 M^3/S , D= 700 mm , R=1.10 m)

H (m)	0.64	0.71	0.78	0.85	0.93	1.00	1.07	1.15	1.22	1.30	1.37	1.45	1.52	1.60	1.68	1.75	1.83	1.91	1.99	2.06	2.14	2.22	2.30	2.38	2.46	2.54	2.62	2.70	2.78	2.86	2.94	3.02	3.10	3.18	3.26	3.34	3.42	3.50	3.59	3.67	3.75	3.83	3.91	3.99	4.08	4.16	4.24	4.32	4.41	4.49	4.57	4.66	4.74	4.82	4.90	4.99
L (m)	1.75	2.00	2.25	2.50	2.75	3.00	3.25	3.50	3.75	4.00	4.25	4.50	4.75	5.00	5.25	5.50	5.75	6.00	6.25	6.50	6.75	7.00	7.25	7.50	7.75	8.00	8.25	8.50	8.75	9.00	9.25	9.50	9.75	10.00	10.25	10.50	10.75	11.00	11.25	11.50	11.75	12.00	12.25	12.50	12.75	13.00	13.25	13.50	13.75	14.00	14.25	14.50	14.75	15.00	15.25	15.50
L1 (m)	1.62	1.85	2.08	2.31	2.54	2.77	3.00	3.23	3.46	3.70	3.93	4.16	4.39	4.62	4.85	5.08	5.31	5.54	5.77	6.00	6.24	6.47	6.70	6.93	7.16	7.39	7.62	7.85	8.08	8.31	8.55	8.78	9.01	9.24	9.47	9.70	9.93	10.16	10.39	10.62	10.86	11.09	11.32	11.55	11.78	12.01	12.24	12.47	12.70	12.93	13.16	13.40	13.63	13.86	14.09	14.32
L2(m)	3.50	3.50	3.50	3.50	3.50	3.50	3.50	3.50	3.50	3.50	3.50	3.70	3.70	3.80	3.50	3.50	3.70	3.80	3.80	3.90	4.00	3.70	3.80	3.90	3.90	4.00	4.00	4.10	3.80	3.90	4.00	4.00	4.10	4.10	4.20	4.20	4.30	4.00	4.10	4.10	4.20	4.20	4.30	4.30	4.40	4.40	4.20	4.20	4.30	4.30	4.40	4.40	4.50	4.50	4.60	4.30
L3(m)	0.90	1.20	1.20	1.20	1.50	1.50	1.50	1.50	1.20	1.20	1.20	1.20	1.20	1.20	1.50	1.50	1.50	1.50	1.50	1.50	1.50	1.80	1.80	1.80	1.80	1.80	1.80	1.80	2.10	2.10	2.10	2.10	2.10	2.10	2.10	2.10	2.10	2.40	2.40	2.40	2.40	2.40	2.40	2.40	2.40	2.40	2.70	2.70	2.70	2.70	2.70	2.70	2.70	2.70	2.70	3.00
H1(m)	0.67	0.76	0.86	0.96	1.05	1.15	1.24	1.34	1.43	1.53	1.63	1.72	1.82	1.91	2.01	2.10	2.20	2.30	2.39	2.49	2.58	2.68	2.77	2.87	2.97	3.06	3.15	3.25	3.35	3.44	3.54	3.63	3.73	3.83	3.92	4.02	4.11	4.21	4.30	4.40	4.50	4.59	4.69	4.78	4.88	4.97	5.07	5.17	5.26	5.36	5.45	5.55	5.64	5.74	5.84	5.93
S (m)	0.20	0.15	0.17	0.20	0.14	0.16	0.19	0.21	0.13	0.15	0.17	0.20	0.22	0.23	0.13	0.15	0.17	0.18	0.20	0.22	0.24	0.13	0.15	0.16	0.18	0.20	0.21	0.23	0.12	0.14	0.15	0.17	0.18	0.20	0.21	0.23	0.24	0.13	0.15	0.16	0.17	0.19	0.20	0.22	0.23	0.24	0.13	0.14	0.16	0.17	0.18	0.20	0.21	0.22	0.23	0.12
ϑ (DEG)	15.00	15.00	15.00	15.00	15.00	15.00	15.00	15.00	22.50	22.50	22.50	22.50	22.50	22.50	22.50	22.50	22.50	22.50	22.50	22.50	22.50	22.50	22.50	22.50	22.50	22.50	22.50	22.50	22.50	22.50	22.50	22.50	22.50	22.50	22.50	22.50	22.50	22.50	22.50	22.50	22.50	22.50	22.50	22.50	22.50	22.50	22.50	22.50	22.50	22.50	22.50	22.50	22.50	22.50	22.50	22.50

TABLE # PDC 26 (Q=0.525 M^3/S , D= 800 mm , R=1.20 m)

H (m)	0.82	0.90	0.98	1.05	1.13	1.21	1.29	1.37	1.45	1.53	1.61	1.69	1.77	1.85	1.93	2.02	2.10	2.18	2.26	2.34	2.43	2.51	2.59	2.68	2.76	2.84	2.93	3.01	3.09	3.18	3.26	3.35	3.43	3.51	3.60	3.68	3.77	3.85	3.94	4.02	4.11	4.19	4.28	4.36	4.45	4.54	4.62	4.71	4.79	4.88	4.96	5.05	5.14	5.22	5.31	5.40
L (m)	1.75	2.00	2.25	2.50	2.75	3.00	3.25	3.50	3.75	4.00	4.25	4.50	4.75	5.00	5.25	5.50	5.75	6.00	6.25	6.50	6.75	7.00	7.25	7.50	7.75	8.00	8.25	8.50	8.75	9.00	9.25	9.50	9.75	10.00	10.25	10.50	10.75	11.00	11.25	11.50	11.75	12.00	12.25	12.50	12.75	13.00	13.25	13.50	13.75	14.00	14.25	14.50	14.75	15.00	15.25	15.50
L1 (m)	1.62	1.85	2.08	2.31	2.54	2.77	3.00	3.23	3.46	3.70	3.93	4.16	4.39	4.62	4.85	5.08	5.31	5.54	5.77	6.00	6.24	6.47	6.70	6.93	7.16	7.39	7.62	7.85	8.08	8.31	8.55	8.78	9.01	9.24	9.47	9.70	9.93	10.16	10.39	10.62	10.86	11.09	11.32	11.55	11.78	12.01	12.24	12.47	12.70	12.93	13.16	13.40	13.63	13.86	14.09	14.32
L2 (m)	4.00	4.00	4.00	4.00	4.00	4.00	4.00	4.00	4.00	4.00	4.00	4.00	4.00	4.00	4.00	4.00	4.00	4.00	4.00	4.00	4.00	4.00	4.00	4.00	4.00	4.00	4.00	4.00	4.00	4.00	4.20	4.20	4.30	4.30	4.00	4.00	4.00	4.20	4.20	4.20	4.30	4.30	4.40	4.40	4.40	4.50	4.20	4.20	4.30	4.30	4.40	4.40	4.40	4.50	4.50	4.50
L3(m)	0.60	0.60	0.90	0.90	1.20	1.20	1.20	0.90	0.90	0.90	0.90	0.90	1.20	1.20	1.20	1.20	1.20	1.20	1.50	1.50	1.50	1.50	1.50	1.50	1.20	1.20	1.20	1.20	1.20	1.20	1.20	1.20	1.20	1.20	1.50	1.50	1.50	1.50	1.50	1.50	1.50	1.50	1.50	1.50	1.50	1.80	1.80	1.80	1.80	1.80	1.80	1.80	1.80	1.80	1.80	1.80
H1 (m)	0.67	0.76	0.86	0.96	1.05	1.15	1.24	1.34	1.43	1.53	1.63	1.72	1.82	1.91	2.01	2.10	2.20	2.30	2.39	2.49	2.58	2.68	2.77	2.87	2.97	3.06	3.16	3.25	3.35	3.44	3.54	3.63	3.73	3.83	3.92	4.02	4.11	4.21	4.30	4.40	4.50	4.59	4.69	4.78	4.88	4.97	5.07	5.17	5.26	5.36	5.45	5.55	5.64	5.74	5.84	5.93
S (m)	0.19	0.21	0.18	0.20	0.18	0.20	0.21	0.15	0.16	0.18	0.19	0.21	0.14	0.16	0.17	0.19	0.20	0.21	0.15	0.16	0.17	0.19	0.20	0.21	0.13	0.14	0.15	0.16	0.18	0.19	0.20	0.21	0.22	0.24	0.12	0.13	0.14	0.15	0.17	0.18	0.19	0.20	0.21	0.22	0.23	0.24	0.12	0.13	0.14	0.15	0.16	0.17	0.18	0.19	0.20	0.21
ϑ (DEG)	7.50	7.50	7.50	7.50	7.50	7.50	7.50	15.00	15.00	15.00	15.00	15.00	15.00	15.00	15.00	15.00	15.00	15.00	15.00	15.00	15.00	15.00	15.00	15.00	15.00	15.00	15.00	15.00	15.00	15.00	22.50	22.50	22.50	22.50	22.50	22.50	22.50	22.50	22.50	22.50	22.50	22.50	22.50	22.50	22.50	22.50	22.50	22.50	22.50	22.50	22.50	22.50	22.50	22.50	22.50	22.50

TABLE # PDC 27 (Q=0.550 M^3/S , D= 700 mm , R=1.10 m)

H (m)	0.61	0.68	0.75	0.82	0.89	0.96	1.04	1.11	1.18	1.26	1.33	1.41	1.48	1.56	1.63	1.71	1.78	1.86	1.94	2.01	2.09	2.17	2.25	2.33	2.40	2.48	2.56	2.64	2.72	2.80	2.88	2.96	3.04	3.12	3.20	3.28	3.36	3.44	3.52	3.60	3.68	3.77	3.85	3.93	4.01	4.09	4.17	4.26	4.34	4.42	4.50	4.58	4.67	4.75	4.83	4.91
L (m)	1.75	2.00	2.25	2.50	2.75	3.00	3.25	3.50	3.75	4.00	4.25	4.50	4.75	5.00	5.25	5.50	5.75	6.00	6.25	6.50	6.75	7.00	7.25	7.50	7.75	8.00	8.25	8.50	8.75	9.00	9.25	9.50	9.75	10.00	10.25	10.50	10.75	11.00	11.25	11.50	11.75	12.00	12.25	12.50	12.75	13.00	13.25	13.50	13.75	14.00	14.25	14.50	14.75	15.00	15.25	15.50
L1 (m)	1.62	1.85	2.08	2.31	2.54	2.77	3.00	3.23	3.46	3.70	3.93	4.16	4.39	4.62	4.85	5.08	5.31	5.54	5.77	6.00	6.24	6.47	6.70	6.93	7.16	7.39	7.62	7.85	8.08	8.31	8.55	8.78	9.01	9.24	9.47	9.70	9.93	10.16	10.39	10.62	10.86	11.09	11.32	11.55	11.78	12.01	12.24	12.47	12.70	12.93	13.16	13.40	13.63	13.86	14.09	14.32
L2(m)	3.50	3.50	3.50	3.50	3.50	3.50	3.50	3.50	3.50	3.50	3.70	3.80	3.50	3.50	3.70	3.80	3.80	3.90	3.70	3.80	3.80	3.90	3.90	4.00	4.10	3.80	3.90	4.00	4.00	4.10	4.10	4.20	4.30	4.00	4.10	4.10	4.20	4.20	4.30	4.30	4.40	4.10	4.20	4.20	4.30	4.30	4.40	4.40	4.50	4.50	4.30	4.30	4.40	4.40	4.50	4.50
L3(m)	1.20	1.20	1.20	1.50	1.50	1.50	1.20	1.20	1.20	1.20	1.20	1.20	1.50	1.50	1.50	1.50	1.50	1.50	1.80	1.80	1.80	1.80	1.80	1.80	1.80	2.10	2.10	2.10	2.10	2.10	2.10	2.10	2.10	2.40	2.40	2.40	2.40	2.40	2.40	2.40	2.40	2.70	2.70	2.70	2.70	2.70	2.70	2.70	2.70	3.00	3.00	3.00	3.00	3.00	3.00	3.00
H1 (m)	0.67	0.76	0.86	0.96	1.05	1.15	1.24	1.34	1.43	1.53	1.63	1.72	1.82	1.91	2.01	2.10	2.20	2.30	2.39	2.49	2.58	2.68	2.77	2.87	2.97	3.06	3.16	3.25	3.35	3.44	3.54	3.63	3.73	3.83	3.92	4.02	4.11	4.21	4.30	4.40	4.50	4.59	4.69	4.78	4.88	4.97	5.07	5.17	5.26	5.36	5.45	5.55	5.64	5.74	5.84	5.93
S (m)	0.15	0.18	0.21	0.15	0.17	0.20	0.13	0.15	0.17	0.19	0.22	0.24	0.13	0.15	0.17	0.19	0.21	0.23	0.13	0.14	0.16	0.18	0.20	0.22	0.23	0.13	0.14	0.16	0.18	0.19	0.21	0.23	0.24	0.13	0.15	0.16	0.18	0.19	0.21	0.22	0.24	0.13	0.14	0.16	0.17	0.19	0.20	0.21	0.23	0.24	0.13	0.14	0.16	0.17	0.18	0.20
ϑ (DEG)	15.00	15.00	15.00	15.00	15.00	15.00	22.50	22.50	22.50	22.50	22.50	22.50	22.50	22.50	22.50	22.50	22.50	22.50	22.50	22.50	22.50	22.50	22.50	22.50	22.50	22.50	22.50	22.50	22.50	22.50	22.50	22.50	22.50	22.50	22.50	22.50	22.50	22.50	22.50	22.50	22.50	22.50	22.50	22.50	22.50	22.50	22.50	22.50	22.50	22.50	22.50	22.50	22.50	22.50	22.50	22.50

TABLE # PDC 28 (Q=0.550 M^3/S , D= 800 mm , R=1.20 m)

H (m)	0.78	0.87	0.95	1.03	1.10	1.18	1.26	1.34	1.42	1.50	1.58	1.66	1.74	1.82	1.90	1.98	2.06	2.14	2.22	2.30	2.39	2.47	2.55	2.63	2.72	2.80	2.88	2.97	3.05	3.13	3.22	3.30	3.38	3.47	3.55	3.63	3.72	3.80	3.89	3.97	4.06	4.14	4.23	4.31	4.40	4.48	4.57	4.65	4.74	4.82	4.91	4.99	5.08	5.16	5.25	5.34
L (m)	1.75	2.00	2.25	2.50	2.75	3.00	3.25	3.50	3.75	4.00	4.25	4.50	4.75	5.00	5.25	5.50	5.75	6.00	6.25	6.50	6.75	7.00	7.25	7.50	7.75	8.00	8.25	8.50	8.75	9.00	9.25	9.50	9.75	10.00	10.25	10.50	10.75	11.00	11.25	11.50	11.75	12.00	12.25	12.50	12.75	13.00	13.25	13.50	13.75	14.00	14.25	14.50	14.75	15.00	15.25	15.50
L1(m)	1.62	1.85	2.08	2.31	2.54	2.77	3.00	3.23	3.46	3.70	3.93	4.16	4.39	4.62	4.85	5.08	5.31	5.54	5.77	6.00	6.24	6.47	6.70	6.93	7.16	7.39	7.62	7.85	8.08	8.31	8.55	8.78	9.01	9.24	9.47	9.70	9.93	10.16	10.39	10.62	10.86	11.09	11.32	11.55	11.78	12.01	12.24	12.47	12.70	12.93	13.16	13.40	13.63	13.86	14.09	14.32
L2(m)	4.00	4.00	4.00	4.00	4.00	4.00	4.00	4.00	4.00	4.00	4.00	4.00	4.00	4.00	4.00	4.00	4.00	4.00	4.00	4.00	4.00	4.00	4.00	4.00	4.00	4.00	4.20	4.20	4.20	4.30	4.00	4.00	4.00	4.20	4.20	4.20	4.30	4.30	4.30	4.40	4.40	4.50	4.20	4.20	4.30	4.30	4.30	4.40	4.40	4.50	4.50	4.50	4.60	4.60	4.30	4.40	4.40
L3(m)	0.60	0.90	0.90	1.20	1.20	0.90	0.90	0.90	0.90	0.90	1.20	1.20	1.20	1.20	1.20	1.50	1.50	1.50	1.50	1.50	1.50	1.50	1.20	1.20	1.20	1.20	1.20	1.20	1.20	1.20	1.20	1.50	1.50	1.50	1.50	1.50	1.50	1.50	1.50	1.50	1.50	1.80	1.80	1.80	1.80	1.80	1.80	1.80	1.80	1.80	1.80	1.80	2.10	2.10	2.10
H1(m)	0.67	0.76	0.86	0.96	1.05	1.15	1.24	1.34	1.43	1.53	1.63	1.72	1.82	1.91	2.01	2.10	2.20	2.30	2.39	2.49	2.58	2.68	2.77	2.87	2.97	3.06	3.16	3.25	3.35	3.44	3.54	3.63	3.73	3.83	3.92	4.02	4.11	4.21	4.30	4.40	4.50	4.59	4.69	4.78	4.88	4.97	5.07	5.17	5.26	5.36	5.45	5.55	5.64	5.74	5.84	5.93
S (m)	0.21	0.19	0.21	0.19	0.21	0.14	0.16	0.18	0.20	0.21	0.15	0.16	0.18	0.19	0.21	0.14	0.16	0.17	0.19	0.20	0.21	0.13	0.15	0.16	0.17	0.18	0.20	0.21	0.22	0.24	0.12	0.13	0.15	0.16	0.17	0.18	0.19	0.21	0.22	0.23	0.24	0.13	0.14	0.15	0.16	0.17	0.18	0.19	0.20	0.21	0.22	0.23	0.24	0.13	0.14	0.15
ϑ (DEG)	7.50	7.50	7.50	7.50	7.50	15.00	15.00	15.00	15.00	15.00	15.00	15.00	15.00	15.00	15.00	15.00	15.00	15.00	15.00	15.00	15.00	22.50	22.50	22.50	22.50	22.50	22.50	22.50	22.50	22.50	22.50	22.50	22.50	22.50	22.50	22.50	22.50	22.50	22.50	22.50	22.50	22.50	22.50	22.50	22.50	22.50	22.50	22.50	22.50	22.50	22.50	22.50	22.50	22.50	22.50	22.50

REFERENCE DWGS : For plan & [illegible]ion see dwg. No.11/3/1/01
For genera[illegible]es see dwgs. No. 20/2/1/01 TO 20/2/1/03

Scale:	IRRIGATION & DRAINAGE STANDARDS		ISLAMIC REPUBLIC OF IRAN
Date:	DWG. No. 11/3/2/07	PIPE DROP TYPE I WITH CONCRETE OUTLET TRANSITION (PIPE CONSTRUCTION DIMENSIONS)	MINISTRY OF PLAN & BU[illegible]ET
Approved:	Sheet No. 8 of 19	Rev. No.	TECHNICAL RESEARCH A[illegible] STANDARD BUREAU

omoorepeyman.ir

TABLE # PDC 29 (Q = 0.575 M^3/S , D = 700 mm , R = 1.10 m)

| | | |

TABLE # PDC 33 (Q=0.650M³/S , D= 800 mm , R=1.20 m)

| | | |

TABLE # PDC 37 (Q=0.700 M^3/S , D= 800 mm , R= 1.20 m)

| | | |

TABLE # PDC 41 (Q=0.750 M^3/S , D= 800 mm , R=1.20 m)

H (m)	0.60	067	0.74	0.81	0.88	0.95	1.03	1.10	1.17	1.24	1.32	1.39	1.47	1.54	1.62	1.69	1.77	1.84	1.92	2.00	2.07	2.15	2.23	2.31	2.38	2.46	2.54	2.62	2.70	2.78	2.85	2.93	3.01	3.09	3.17	3.25	3.33	3.41	3.49	3.57	3.65	3.73	3.81	3.90	3.98	4.06	4.14	4.22	4.30	4.38	4.47	4.55	4.63	4.71	4.79	4.88
L (m)	1.75	2.00	2.25	2.50	2.75	3.00	3.25	3.50	3.75	4.00	4.25	4.50	4.75	5.00	5.25	5.50	5.75	6.00	6.25	6.50	6.75	7.00	7.25	7.50	7.75	8.00	8.25	8.50	8.75	9.00	9.25	9.50	9.75	10.00	10.25	10.50	10.75	11.00	11.25	11.50	11.75	12.00	12.25	12.50	12.75	13.00	13.25	13.50	13.75	14.00	14.25	14.50	14.75	15.00	15.25	15.50
L1 (m)	1.62	1.85	2.08	2.31	2.54	2.77	3.00	3.23	3.46	3.70	3.93	4.16	4.39	4.62	4.85	5.08	5.31	5.54	5.77	6.00	6.24	6.47	6.70	6.93	7.16	7.39	7.62	7.85	8.08	8.31	8.55	8.78	9.01	9.24	9.47	9.70	9.93	10.16	10.39	10.62	10.86	11.09	11.32	11.55	11.78	12.01	12.24	12.47	12.70	12.93	13.16	13.40	13.63	13.86	14.09	14.32
L2(m)	4.00	4.00	4.00	4.00	4.00	4.00	4.00	4.00	4.00	4.00	4.00	4.00	4.00	4.00	4.00	4.20	4.20	4.00	4.00	4.20	4.20	4.30	4.40	4.40	4.20	4.20	4.30	4.40	4.40	4.50	4.60	4.30	4.40	4.40	4.50	4.60	4.60	4.70	4.70	4.50	4.50	4.60	4.60	4.70	4.70	4.80	4.90	4.60	4.70	4.70	4.80	4.80	4.90	4.90	5.00	5.00
L3(m)	1.20	1.20	1.20	1.50	1.50	1.50	1.20	1.20	1.20	1.20	1.20	1.50	1.50	1.50	1.50	1.50	1.50	1.80	1.80	1.80	1.80	1.80	1.80	1.80	2.10	2.10	2.10	2.10	2.10	2.10	2.10	2.40	2.40	2.40	2.40	2.40	2.40	2.40	2.40	2.70	2.70	2.70	2.70	2.70	2.70	2.70	3.00	3.00	3.00	3.00	3.00	3.00	3.00	3.00	3.00
H1(m)	0.67	0.76	0.86	0.96	1.05	1.15	1.24	1.34	1.43	1.53	1.63	1.72	1.82	1.91	2.01	2.10	2.20	2.30	2.39	2.49	2.58	2.68	2.77	2.87	2.97	3.06	3.16	3.25	3.35	3.44	3.54	3.63	3.73	3.83	3.92	4.02	4.11	4.21	4.30	4.40	4.50	4.59	4.69	4.78	4.88	4.97	5.07	5.17	5.26	5.36	5.45	5.55	5.64	5.74	5.84	5.93
S (m)	0.16	0.19	0.22	0.16	0.19	0.21	0.14	0.16	0.19	0.21	0.23	0.13	0.15	0.17	0.19	0.21	0.23	0.13	0.15	0.17	0.18	0.20	0.22	0.24	0.13	0.15	0.17	0.19	0.20	0.22	0.24	0.13	0.15	0.16	0.18	0.19	0.21	0.23	0.24	0.13	0.15	0.16	0.18	0.19	0.21	0.22	0.24	0.12	0.14	0.15	0.17	0.18	0.20	0.21	0.22	0.24
ϑ (DEG)	15.00	15.00	15.00	15.00	15.00	15.00	22.50	22.50	22.50	22.50	22.50	22.50	22.50	22.50	22.50	22.50	22.50	22.50	22.50	22.50	22.50	22.50	22.50	22.50	22.50	22.50	22.50	22.50	22.50	22.50	22.50	22.50	22.50	22.50	22.50	22.50	22.50	22.50	22.50	22.50	22.50	22.50	22.50	22.50	22.50	22.50	22.50	22.50	22.50	22.50	22.50	22.50	22.50	22.50	22.50	22.50

TABLE # PDC 42 (Q=0.750 M^3/S , D= 900 mm , R=1.30 m)

H (m)	0.78	0.85	0.93	1.01	1.08	1.16	1.24	1.31	1.39	1.47	1.55	1.63	1.71	1.79	1.87	1.95	2.03	2.11	2.19	2.27	2.35	2.43	2.51	2.59	2.68	2.76	2.84	2.92	3.00	3.09	3.17	3.25	3.34	3.42	3.50	3.58	3.67	3.75	3.84	3.92	4.00	4.09	4.17	4.26	4.34	4.42	4.51	4.59	4.68	4.76	4.85	4.93	5.02	5.10	5.19	5.27
L (m)	1.75	2.00	2.25	2.50	2.75	3.00	3.25	3.50	3.75	4.00	4.25	4.50	4.75	5.00	5.25	5.50	5.75	6.00	6.25	6.50	6.75	7.00	7.25	7.50	7.75	8.00	8.25	8.50	8.75	9.00	9.25	9.50	9.75	10.00	10.25	10.50	10.75	11.00	11.25	11.50	11.75	12.00	12.25	12.50	12.75	13.00	13.25	13.50	13.75	14.00	14.25	14.50	14.75	15.00	15.25	15.50
L1 (m)	1.62	1.85	2.08	2.31	2.54	2.77	3.00	3.23	3.46	3.70	3.93	4.16	4.39	4.62	4.85	5.08	5.31	5.54	5.77	6.00	6.24	6.47	6.70	6.93	7.16	7.39	7.62	7.85	8.08	8.31	8.55	8.78	9.01	9.24	9.47	9.70	9.93	10.16	10.39	10.62	10.86	11.09	11.32	11.55	11.78	12.01	12.24	12.47	12.70	12.93	13.16	13.40	13.63	13.86	14.09	14.32
L2(m)	4.50	4.50	4.50	4.50	4.50	4.50	4.50	4.50	4.50	4.50	4.50	4.50	4.50	4.50	4.50	4.50	4.50	4.50	4.50	4.50	4.50	4.50	4.50	4.50	4.50	4.50	4.50	4.50	4.50	4.50	4.50	4.50	4.70	4.70	4.80	4.80	4.80	4.90	4.90	4.70	4.70	4.70	4.80	4.80	4.90	4.90	4.90	5.00	5.00	5.10	5.10	5.10	5.10	5.10	5.10	5.10
L3(m)	0.90	0.90	1.20	1.20	0.90	0.90	0.90	0.90	1.20	1.20	1.20	1.20	1.20	1.50	1.50	1.50	1.50	1.50	1.20	1.20	1.20	1.20	1.20	1.20	1.20	1.20	1.20	1.50	1.50	1.50	1.50	1.50	1.50	1.50	1.50	1.50	1.50	1.80	1.80	1.80	1.80	1.80	1.80	1.80	1.80	1.80	1.80	2.10	2.10	2.10	2.10	2.10	2.10	2.10	2.10	2.10
H1(m)	0.67	0.76	0.86	0.96	1.05	1.15	1.24	1.34	1.43	1.53	1.63	1.72	1.82	1.91	2.01	2.10	2.20	2.30	2.39	2.49	2.58	2.68	2.77	2.87	2.97	3.06	3.16	3.25	3.35	3.44	3.54	3.63	3.73	3.83	3.92	4.02	4.11	4.21	4.30	4.40	4.50	4.59	4.69	4.78	4.88	4.97	5.07	5.17	5.26	5.36	5.45	5.55	5.64	5.74	5.84	5.93
S (m)	0.19	0.21	0.19	0.21	0.15	0.17	0.19	0.21	0.14	0.16	0.18	0.19	0.21	0.15	0.16	0.18	0.19	0.21	0.13	0.14	0.16	0.17	0.19	0.20	0.21	0.23	0.24	0.13	0.14	0.16	0.17	0.18	0.20	0.21	0.22	0.23	0.25	0.13	0.15	0.16	0.17	0.18	0.19	0.21	0.22	0.23	0.24	0.13	0.14	0.15	0.16	0.17	0.18	0.19	0.20	0.21
ϑ (DEG)	7.50	7.50	7.50	7.50	15.00	15.00	15.00	15.00	15.00	15.00	15.00	15.00	15.00	15.00	15.00	15.00	15.00	15.00	22.50	22.50	22.50	22.50	22.50	22.50	22.50	22.50	22.50	22.50	22.50	22.50	22.50	22.50	22.50	22.50	22.50	22.50	22.50	22.50	22.50	22.50	22.50	22.50	22.50	22.50	22.50	22.50	22.50	22.50	22.50	22.50	22.50	22.50	22.50	22.50	22.50	22.50

TABLE # PDC 43 (Q=0.775 M^3/S , D= 800 mm , R=1.20 m)

H (m)	0.58	0.65	0.72	0.79	0.86	0.93	1.00	1.07	1.14	1.21	1.29	1.36	1.43	1.61	1.58	1.66	1.73	1.81	1.88	1.96	2.04	2.11	2.19	2.27	2.34	2.42	2.50	2.58	2.65	2.73	2.81	2.89	2.97	3.05	3.13	3.21	3.29	3.36	3.44	3.52	3.60	3.68	3.76	3.85	3.93	4.01	4.09	4.17	4.25	4.33	4.41	4.49	4.57	4.66	4.74	4.82
L (m)	1.75	2.00	2.25	2.50	2.75	3.00	3.25	3.50	3.75	4.00	4.25	4.50	4.75	5.00	5.25	5.50	5.75	6.00	6.25	6.50	6.75	7.00	7.25	7.50	7.75	8.00	8.25	8.50	8.75	9.00	9.25	9.50	9.75	10.00	10.25	10.50	10.75	11.00	11.25	11.50	11.75	12.00	12.25	12.50	12.75	13.00	13.25	13.50	13.75	14.00	14.25	14.50	14.75	15.00	15.25	15.50
L1 (m)	1.62	1.85	2.08	2.31	2.54	2.77	3.00	3.23	3.46	3.70	3.93	4.16	4.39	4.62	4.85	5.08	5.31	5.54	5.77	6.00	6.24	6.47	6.70	6.93	7.16	7.39	7.62	7.85	8.08	8.31	8.55	8.78	9.01	9.24	9.47	9.70	9.93	10.16	10.39	10.62	10.86	11.09	11.32	11.55	11.78	12.01	12.24	12.47	12.70	12.93	13.16	13.40	13.63	13.86	14.09	14.32
L2(m)	4.00	4.00	4.00	4.00	4.00	4.00	4.00	4.00	4.00	4.00	4.00	4.00	4.00	4.00	4.20	4.00	4.00	4.00	4.20	4.30	4.30	4.40	4.20	4.20	4.30	4.40	4.40	4.50	4.60	4.30	4.40	4.50	4.50	4.60	4.60	4.70	4.50	4.50	4.60	4.60	4.70	4.70	4.80	4.80	4.60	4.70	4.70	4.80	4.80	4.90	4.90	5.00	4.70	4.80	4.80	4.90
L3(m)	1.20	1.20	1.50	1.50	1.50	1.20	1.20	1.20	1.20	1.20	1.50	1.50	1.50	1.50	1.50	1.80	1.80	1.80	1.80	1.80	1.80	1.80	2.10	2.10	2.10	2.10	2.10	2.10	2.10	2.40	2.40	2.40	2.40	2.40	2.40	2.40	2.70	2.70	2.70	2.70	2.70	2.70	2.70	2.70	3.00	3.00	3.00	3.00	3.00	3.00	3.00	3.00	3.30	3.30	3.30	3.30
H1(m)	0.67	0.76	0.86	0.96	1.05	1.15	1.24	1.34	1.43	1.53	1.63	1.72	1.82	1.91	2.01	2.10	2.20	2.30	2.39	2.49	2.58	2.68	2.77	2.87	2.97	3.06	3.16	3.25	3.35	3.44	3.54	3.63	3.73	3.83	3.92	4.02	4.11	4.21	4.30	4.40	4.50	4.59	4.69	4.78	4.88	4.97	5.07	5.17	5.26	5.36	5.45	5.55	5.64	5.74	5.84	5.93
S (m)	0.19	0.21	0.16	0.19	0.21	0.14	0.17	0.19	0.22	0.24	0.14	0.16	0.18	0.20	0.23	0.12	0.14	0.16	0.18	0.20	0.22	0.24	0.14	0.15	0.17	0.19	0.21	0.23	0.25	0.14	0.16	0.17	0.19	0.21	0.22	0.24	0.13	0.15	0.16	0.18	0.20	0.21	0.23	0.24	0.13	0.15	0.16	0.18	0.19	0.21	0.22	0.24	0.13	0.14	0.15	0.17
ϑ (DEG)	15.00	15.00	15.00	15.00	15.00	22.50	22.50	22.50	22.50	22.50	22.50	22.50	22.50	22.50	22.50	22.50	22.50	22.50	22.50	22.50	22.50	22.50	22.50	22.50	22.50	22.50	22.50	22.50	22.50	22.50	22.50	22.50	22.50	22.50	22.50	22.50	22.50	22.50	22.50	22.50	22.50	22.50	22.50	22.50	22.50	22.50	22.50	22.50	22.50	22.50	22.50	22.50	22.50	22.50	22.50	22.50

TABLE # PDC 44 (Q=0.775 M^3/S , D= 900 mm , R=1.30 m)

H (m)	0.76	0.83	0.91	0.98	1.06	1.14	1.21	1.29	1.37	1.44	1.53	1.60	1.68	1.76	1.84	1.92	2.00	2.08	2.16	2.24	2.32	2.40	2.48	2.56	2.64	2.72	2.80	2.89	2.97	3.05	3.13	3.22	3.30	3.38	3.46	3.55	3.63	3.71	3.80	3.88	3.96	4.05	4.13	4.21	4.30	4.38	4.47	4.55	4.63	4.72	4.80	4.89	4.97	5.06	5.14	5.23
L (m)	1.75	2.00	2.25	2.50	2.75	3.00	3.25	3.50	3.75	4.00	4.25	4.50	4.75	5.00	5.25	5.50	5.75	6.00	6.25	6.50	6.75	7.00	7.25	7.50	7.75	8.00	8.25	8.50	8.75	9.00	9.25	9.50	9.75	10.00	10.25	10.50	10.75	11.00	11.25	11.50	11.75	12.00	12.25	12.50	12.75	13.00	13.25	13.50	13.75	14.00	14.25	14.50	14.75	15.00	15.25	15.50
L1(m)	1.62	1.85	2.08	2.31	2.54	2.77	3.00	3.23	3.46	3.70	3.93	4.16	4.39	4.62	4.85	5.08	5.31	5.54	5.77	6.00	6.24	6.47	6.70	6.93	7.16	7.39	7.62	7.85	8.08	8.31	8.55	8.78	9.01	9.24	9.47	9.70	9.93	10.16	10.39	10.62	10.86	11.09	11.32	11.55	11.78	12.01	12.24	12.47	12.70	12.93	13.16	13.40	13.63	13.86	14.09	14.32
L2(m)	4.50	4.50	4.50	4.50	4.50	4.50	4.50	4.50	4.50	4.50	4.50	4.50	4.50	4.50	4.50	4.50	4.50	4.50	4.50	4.50	4.50	4.50	4.50	4.50	4.50	4.50	4.50	4.50	4.50	4.50	4.50	4.50	4.70	4.70	4.50	4.50	4.50	4.50	4.70	4.70	4.80	4.80	4.90	4.90	4.90	4.70	4.70	4.80	4.80	4.90	4.90	4.90	5.00	5.00	5.10	4.80	4.80
L3(m)	0.90	1.20	1.20	0.90	0.90	0.90	0.90	1.20	1.20	1.20	1.20	1.20	1.50	1.50	1.50	1.50	1.20	1.20	1.20	1.20	1.20	1.20	1.20	1.20	1.50	1.50	1.50	1.50	1.50	1.50	1.50	1.50	1.50	1.80	1.80	1.80	1.80	1.80	1.80	1.80	1.80	1.80	1.80	1.80	2.10	2.10	2.10	2.10	2.10	2.10	2.10	2.10	2.10	2.40	2.40
H1(m)	0.67	0.76	0.86	0.96	1.05	1.15	1.24	1.34	1.43	1.53	1.63	1.72	1.82	1.91	2.01	2.10	2.20	2.30	2.39	2.49	2.58	2.68	2.77	2.87	2.97	3.06	3.16	3.25	3.35	3.44	3.54	3.63	3.73	3.83	3.92	4.02	4.11	4.21	4.30	4.40	4.50	4.59	4.69	4.78	4.88	4.97	5.07	5.17	5.26	5.36	5.45	5.55	5.64	5.74	5.84	5.93
S (m)	0.21	0.20	0.22	0.15	0.17	0.19	0.21	0.15	0.17	0.19	0.20	0.22	0.16	0.17	0.19	0.21	0.13	0.14	0.16	0.17	0.19	0.20	0.22	0.23	0.12	0.14	0.15	0.17	0.18	0.19	0.21	0.22	0.23	0.12	0.14	0.15	0.16	0.17	0.19	0.20	0.21	0.22	0.24	0.25	0.13	0.15	0.16	0.17	0.18	0.19	0.20	0.22	0.23	0.24	0.12	0.14
ϑ (DEG)	7.50	7.50	7.50	15.00	15.00	15.00	15.00	15.00	15.00	15.00	15.00	15.00	15.00	15.00	15.00	15.00	15.00	22.50	22.50	22.50	22.50	22.50	22.50	22.50	22.50	22.50	22.50	22.50	22.50	22.50	22.50	22.50	22.50	22.50	22.50	22.50	22.50	22.50	22.50	22.50	22.50	22.50	22.50	22.50	22.50	22.50	22.50	22.50	22.50	22.50	22.50	22.50	22.50	22.50	22.50	22.50

REFERNCE DWGS: For plan & section see dwg. N°. 11/3/1/01
For general notes see dwgs. N° 20/2/1/01 TO 20/2/1/03

Scale:	IRRIGATION & DRAINAGE STANDARDS		
Date:	DWG. N°. 11/3/2/11		PIPE DROP TYPE I WITH CONCRETE OUTLET TRANSITION (PIPE CONSTRUCTION DIMENSIONS)
Approved:	Sheet. N°. 12 of 19	Rev. N°.	

ISLAMIC REPUBLIC OF IRAN
MINISTRY OF PLAN & BUDJET
TECHNICAL RESEARCH & STANDARD BUREAU

omoorepeyman.ir

TABLE # PDC 45 (Q=0.800M³/S , D= 900 mm , R=1.30 m)

| | | |

TABLE # PDC 49 (Q=0.850 M^3/S , D= 900 mm , R=1.30 m)

| | | |

TABLE # PDC 53 (Q=0.900M³/S , D= 900 mm , R=1.30 m)

| | | |

TABLE # PDC 57 (Q=0.950 M^3/S , D= 900 mm , R=1.30 m)

H (m)	0.63	0.69	0.76	0.83	0.91	0.98	1.05	1.12	1.19	1.27	1.34	1.42	1.49	1.57	1.64	1.72	1.79	1.87	1.95	2.02	2.10	2.18	2.26	2.33	2.41	2.49	2.57	2.65	2.72	2.80	2.88	2.96	3.04	3.12	3.20	3.28	3.36	3.44	3.52	3.60	3.68	3.76	3.85	3.93	4.01	4.09	4.17	4.25	4.33	4.41	4.50	4.58	4.66	4.74	4.82	4.91
L (m)	1.75	2.00	2.25	2.50	2.75	3.00	3.25	3.50	3.75	4.00	4.25	4.50	4.75	5.00	5.25	5.50	5.75	6.00	6.25	6.50	6.75	7.00	7.25	7.50	7.75	8.00	8.25	8.50	8.75	9.00	9.25	9.50	9.75	10.00	10.25	10.50	10.75	11.00	11.25	11.50	11.75	12.00	12.25	12.50	12.75	13.00	13.25	13.50	13.75	14.00	14.25	14.50	14.75	15.00	15.25	15.50
L1 (m)	1.62	1.85	2.08	2.31	2.54	2.77	3.00	3.23	3.46	3.70	3.93	4.16	4.39	4.62	4.85	5.08	5.31	5.54	5.77	6.00	6.24	6.47	6.70	6.93	7.16	7.39	7.62	7.85	8.08	8.31	8.55	8.78	9.01	9.24	9.47	9.70	9.93	10.16	10.39	10.62	10.86	11.09	11.32	11.55	11.78	12.01	12.24	12.47	12.70	12.93	13.16	13.40	13.63	13.86	14.09	14.32
L2(m)	4.50	4.50	4.50	4.50	4.50	4.50	4.50	4.50	4.50	4.50	4.50	4.50	4.50	4.50	4.50	4.50	4.50	4.50	4.50	4.50	4.50	4.50	4.50	4.70	4.70	4.50	4.50	4.50	4.70	4.80	4.80	4.90	4.90	4.70	4.70	4.80	4.90	4.90	5.00	5.00	5.10	4.80	4.90	4.90	5.00	5.10	5.10	5.20	5.20	5.30	5.00	5.10	5.10	5.20	5.20	5.30
L3(m)	1.20	1.20	1.20	1.50	1.50	1.50	1.50	1.20	1.20	1.20	1.20	1.20	1.50	1.50	1.50	1.50	1.50	1.50	1.50	1.80	1.80	1.80	1.80	1.80	1.80	2.10	2.10	2.10	2.10	2.10	2.10	2.10	2.10	2.40	2.40	2.40	2.40	2.40	2.40	2.40	2.40	2.70	2.70	2.70	2.70	2.70	2.70	2.70	2.70	3.00	3.00	3.00	3.00	3.00	3.00
H1(m)	0.67	0.76	0.86	0.96	1.05	1.15	1.24	1.54	1.43	1.53	1.63	1.72	1.82	1.91	2.01	2.10	2.20	2.30	2.39	2.49	2.58	2.68	2.77	2.87	2.97	3.06	3.16	3.25	3.35	3.44	3.54	3.63	3.73	3.83	3.92	4.02	4.11	4.21	4.30	4.40	4.50	4.59	4.69	4.78	4.88	4.97	5.07	5.17	5.26	5.36	5.45	5.55	5.64	5.74	5.84	5.93
S (m)	0.14	0.17	0.20	0.14	0.17	0.19	0.21	0.14	0.16	0.19	0.21	0.23	0.13	0.15	0.17	0.19	0.21	0.23	0.25	0.14	0.16	0.18	0.20	0.21	0.23	0.12	0.14	0.16	0.18	0.19	0.21	0.23	0.24	0.13	0.15	0.17	0.18	0.20	0.21	0.23	0.24	0.13	0.15	0.16	0.18	0.19	0.21	0.22	0.24	0.25	0.14	0.15	0.17	0.18	0.19	0.21
ϑ (DEG)	15.00	15.00	15.00	15.00	15.00	15.00	15.00	22.50	22.50	22.50	22.50	22.50	22.50	22.50	22.50	22.50	22.50	22.50	22.50	22.50	22.50	22.50	22.50	22.50	22.50	22.50	22.50	22.50	22.50	22.50	22.50	22.50	22.50	22.50	22.50	22.50	22.50	22.50	22.50	22.50	22.50	22.50	22.50	22.50	22.50	22.50	22.50	22.50	22.50	22.50	22.50	22.50	22.50	22.50	22.50	22.50

TABLE # PDC 58 (Q=0.950 M^3/S , D=1000 mm , R=1.40 m)

H (m)	0.79	0.87	0.94	1.02	1.09	1.17	1.25	1.32	1.40	1.48	1.56	1.64	1.72	1.79	1.87	1.95	2.03	2.11	2.19	2.28	2.36	2.44	2.52	2.60	2.68	2.76	2.84	2.93	3.01	3.09	3.17	3.26	3.34	3.42	3.50	3.59	3.67	3.75	3.84	3.92	4.00	4.09	4.17	4.26	4.34	4.42	4.51	4.59	4.68	4.76	4.85	4.93	5.02	5.10	5.19	5.27
L (m)	1.75	2.00	2.25	2.50	2.75	3.00	3.25	3.50	3.75	4.00	4.25	4.50	4.75	5.00	5.25	5.50	5.75	6.00	6.25	6.50	6.75	7.00	7.25	7.50	7.75	8.00	8.25	8.50	8.75	9.00	9.25	9.50	9.75	10.00	10.25	10.50	10.75	11.00	11.25	11.50	11.75	12.00	12.25	12.50	12.75	13.00	13.25	13.50	13.75	14.00	14.25	14.50	14.75	15.00	15.25	15.50
L1 (m)	1.62	1.85	2.08	2.31	2.54	2.77	3.00	3.23	3.46	3.70	3.93	4.16	4.39	4.62	4.85	5.08	5.31	5.54	5.77	6.00	6.24	6.47	6.70	6.93	7.16	7.39	7.62	7.85	8.08	8.31	8.55	8.78	9.01	9.24	9.47	9.70	9.93	10.16	10.39	10.62	10.86	11.09	11.32	11.55	11.78	12.01	12.24	12.47	12.70	12.93	13.16	13.40	13.63	13.86	14.09	14.32
L2 (m)	5.00	5.00	5.00	5.00	5.00	5.00	5.00	5.00	5.00	5.00	5.00	5.00	5.00	5.00	5.00	5.00	5.00	5.00	5.00	5.00	5.00	5.00	5.00	5.00	5.00	5.00	5.00	5.00	5.00	5.00	5.00	5.00	5.00	5.00	5.00	5.00	5.00	5.00	5.00	5.00	5.00	5.00	5.00	5.00	5.20	5.20	5.30	5.00	5.00	5.00	5.00	5.20	5.20	5.30	5.30	5.30
L3(m)	0.90	0.90	1.20	1.20	1.50	0.90	0.90	0.90	0.90	1.20	1.20	1.20	1.20	1.20	1.50	1.50	1.50	1.50	1.50	1.20	1.20	1.20	1.20	1.20	1.20	1.20	1.20	1.50	1.50	1.50	1.50	1.50	1.50	1.50	1.50	1.50	1.80	1.80	1.80	1.80	1.80	1.80	1.80	1.80	1.80	2.10	2.10	2.10	2.10	2.10	2.10	2.10	2.10	2.10	2.10	2.10
H1 (m)	0.67	0.76	0.86	0.96	1.05	1.15	1.24	1.34	1.43	1.53	1.63	1.72	1.82	1.91	2.01	2.10	2.20	2.30	2.39	2.49	2.58	2.68	2.77	2.87	2.97	3.06	3.16	3.25	3.35	3.44	3.54	3.63	3.73	3.83	3.92	4.02	4.11	4.21	4.30	4.40	4.50	4.59	4.69	4.78	4.88	4.97	5.07	5.17	5.26	5.36	5.45	5.55	5.64	5.74	5.84	5.93
S (m)	0.19	0.21	0.19	0.21	0.19	0.16	0.18	0.20	0.22	0.15	0.17	0.19	0.21	0.22	0.16	0.17	0.19	0.20	0.22	0.14	0.15	0.17	0.18	0.20	0.21	0.23	0.24	0.13	0.14	0.16	0.17	0.18	0.19	0.21	0.22	0.23	0.25	0.13	0.15	0.16	0.17	0.18	0.19	0.21	0.22	0.23	0.24	0.13	0.14	0.15	0.16	0.17	0.18	0.20	0.21	0.22
ϑ (DEG)	7.50	7.50	7.50	7.50	7.50	15.00	15.00	15.00	15.00	15.00	15.00	15.00	15.00	15.00	15.00	15.00	15.00	15.00	15.00	22.50	22.50	22.50	22.50	22.50	22.50	22.50	22.50	22.50	22.50	22.50	22.50	22.50	22.50	22.50	22.50	22.50	22.50	22.50	22.50	22.50	22.50	22.50	22.50	22.50	22.50	22.50	22.50	22.50	22.50	22.50	22.50	22.50	22.50	22.50	22.50	22.50

TABLE # PDC 59 (Q=0.975 M^3/S , D= 900 mm , R=1.30 m)

H (m)	0.61	0.68	0.74	0.81	0.88	0.96	1.03	1.10	1.17	1.24	1.32	1.39	1.47	1.54	1.61	1.69	1.77	1.84	1.92	1.99	2.07	2.15	2.22	2.30	2.38	2.46	2.53	2.61	2.69	2.77	2.85	2.93	3.01	3.09	3.16	3.24	3.32	3.40	3.48	3.56	3.64	3.72	3.81	3.89	3.97	4.05	4.13	4.21	4.29	4.37	4.45	4.54	4.62	4.70	4.78	4.86
L (m)	1.75	2.00	2.25	2.50	2.75	3.00	3.25	3.50	3.75	4.00	4.25	4.50	4.75	5.00	5.25	5.50	5.75	6.00	6.25	6.50	6.75	7.00	7.25	7.50	7.75	8.00	8.25	8.50	8.75	9.00	9.25	9.50	9.75	10.00	10.25	10.50	10.75	11.00	11.25	11.50	11.75	12.00	12.25	12.50	12.75	13.00	13.25	13.50	13.75	14.00	14.25	14.50	14.75	15.00	15.25	15.50
L1 (m)	1.62	1.85	2.08	2.31	2.54	2.77	3.00	3.23	3.46	3.70	3.93	4.16	4.39	4.62	4.85	5.08	5.31	5.54	5.77	6.00	6.24	6.47	6.70	6.93	7.16	7.39	7.62	7.85	8.08	8.31	8.55	8.78	9.01	9.24	9.47	9.70	9.93	10.16	10.39	10.62	10.86	11.09	11.32	11.55	11.78	12.01	12.24	12.47	12.70	12.93	13.16	13.40	13.63	13.86	14.09	14.32
L2(m)	4.50	4.50	4.50	4.50	4.50	4.50	4.50	4.50	4.50	4.50	4.50	4.50	4.50	4.50	4.50	4.50	4.50	4.50	4.50	4.50	4.50	4.50	4.50	4.70	4.80	4.50	4.50	4.70	4.70	4.80	4.90	4.90	4.70	4.70	4.80	4.90	4.90	5.00	5.00	4.80	4.80	4.90	5.00	5.00	5.10	5.10	5.20	5.20	5.00	5.00	5.10	5.10	5.20	5.20	5.30	5.10
L3(m)	1.20	1.20	1.20	1.50	1.50	1.50	1.20	1.20	1.20	1.20	1.20	1.50	1.50	1.50	1.50	1.50	1.50	1.80	1.80	1.80	1.80	1.80	1.80	2.10	2.10	2.10	2.10	2.10	2.10	2.10	2.40	2.40	2.40	2.40	2.40	2.40	2.40	2.40	2.70	2.70	2.70	2.70	2.70	2.70	2.70	2.70	3.00	3.00	3.00	3.00	3.00	3.00	3.00	3.00	3.00	3.30
H1(m)	0.67	0.76	0.86	0.96	1.05	1.15	1.24	1.34	1.43	1.53	1.63	1.72	1.82	1.91	2.01	2.10	2.20	2.30	2.39	2.49	2.58	2.68	2.77	2.87	2.97	3.06	3.16	3.25	3.35	3.44	3.54	3.63	3.73	3.83	3.92	4.02	4.11	4.21	4.30	4.40	4.50	4.59	4.69	4.78	4.88	4.97	5.07	5.17	5.26	5.36	5.45	5.55	5.64	5.74	5.84	5.93
S (m)	0.16	0.19	0.22	0.16	0.19	0.21	0.14	0.17	0.19	0.21	0.23	0.13	0.15	0.17	0.19	0.22	0.24	0.13	0.15	0.17	0.19	0.21	0.23	0.25	0.14	0.16	0.18	0.19	0.21	0.23	0.25	0.14	0.15	0.17	0.19	0.20	0.22	0.24	0.13	0.14	0.16	0.17	0.19	0.20	0.22	0.23	0.25	0.14	0.15	0.17	0.18	0.20	0.21	0.22	0.24	0.13
ϑ (DEG)	15.00	15.00	15.00	15.00	15.00	15.00	22.50	22.50	22.50	22.50	22.50	22.50	22.50	22.50	22.50	22.50	22.50	22.50	22.50	22.50	22.50	22.50	22.50	22.50	22.50	22.50	22.50	22.50	22.50	22.50	22.50	22.50	22.50	22.50	22.50	22.50	22.50	22.50	22.50	22.50	22.50	22.50	22.50	22.50	22.50	22.50	22.50	22.50	22.50	22.50	22.50	22.50	22.50	22.50	22.50	22.50

TABLE # PDC 60 (Q=0.975 M^3/S , D=1000 mm , R=1.40 m)

H (m)	0.77	0.85	0.92	1.00	1.07	1.15	1.23	1.30	1.38	1.46	1.54	1.61	1.69	1.77	1.85	1.93	2.01	2.09	2.17	2.25	2.33	2.41	2.49	2.57	2.65	2.74	2.82	2.90	2.98	3.06	3.14	3.23	3.31	3.39	3.47	3.56	3.64	3.72	3.81	3.89	3.97	4.06	4.14	4.22	4.31	4.39	4.47	4.56	4.64	4.73	4.81	4.89	4.98	5.06	5.15	5.23
L (m)	1.75	2.00	2.25	2.50	2.75	3.00	3.25	3.50	3.75	4.00	4.25	4.50	4.75	5.00	5.25	5.50	5.75	6.00	6.25	6.50	6.75	7.00	7.25	7.50	7.75	8.00	8.25	8.50	8.75	9.00	9.25	9.50	9.75	10.00	10.25	10.50	10.75	11.00	11.25	11.50	11.75	12.00	12.25	12.50	12.75	13.00	13.25	13.50	13.75	14.00	14.25	14.50	14.75	15.00	15.25	15.50
L1(m)	1.62	1.85	2.08	2.31	2.54	2.77	3.00	3.23	3.46	3.70	3.93	4.16	4.39	4.62	4.85	5.08	5.31	5.54	5.77	6.00	6.24	6.47	6.70	6.93	7.16	7.39	7.62	7.85	8.08	8.31	8.55	8.78	9.01	9.24	9.47	9.70	9.93	10.16	10.39	10.62	10.86	11.09	11.32	11.55	11.78	12.01	12.24	12.47	12.70	12.93	13.16	13.40	12.63	13.86	14.09	14.32
L2(m)	5.00	5.00	5.00	5.00	5.00	5.00	5.00	5.00	5.00	5.00	5.00	5.00	5.00	5.00	5.00	5.00	5.00	5.00	5.00	5.00	5.00	5.00	5.00	5.00	5.00	5.00	5.00	5.00	5.00	5.00	5.00	5.00	5.00	5.00	5.00	5.00	5.00	5.00	5.00	5.00	5.00	5.20	5.20	5.30	5.00	5.00	5.00	5.00	5.20	5.20	5.30	5.30	5.30	5.40	5.40	5.20
L3(m)	0.90	0.90	1.20	1.50	0.90	0.90	0.90	0.90	1.20	1.20	1.20	1.20	1.50	1.50	1.50	1.50	1.50	1.20	1.20	1.20	1.20	1.20	1.20	1.20	1.50	1.50	1.50	1.50	1.50	1.50	1.50	1.50	1.50	1.80	1.80	1.80	1.80	1.80	1.80	1.80	1.80	1.80	1.80	1.80	2.10	2.10	2.10	2.10	2.10	2.10	2.10	2.10	2.10	2.10	2.10	2.40
H1(m)	0.67	0.76	0.86	0.96	1.05	1.15	1.24	1.34	1.43	1.53	1.63	1.72	1.82	1.91	2.01	2.10	2.20	2.30	2.39	2.49	2.58	2.68	2.77	2.87	2.97	3.06	3.16	3.25	3.35	3.44	3.54	3.63	3.73	3.83	3.92	4.02	4.11	4.21	4.30	4.40	4.50	4.59	4.69	4.78	4.88	4.97	5.07	5.17	5.26	5.36	5.45	5.55	5.64	5.74	5.83	5.93
S (m)	0.20	0.22	0.20	0.19	0.16	0.18	0.20	0.22	0.16	0.18	0.19	0.21	0.15	0.16	0.18	0.20	0.21	0.13	0.15	0.16	0.18	0.20	0.21	0.22	0.24	0.13	0.14	0.16	0.17	0.19	0.20	0.21	0.23	0.24	0.13	0.14	0.15	0.17	0.18	0.19	0.20	0.22	0.23	0.24	0.13	0.14	0.15	0.16	0.18	0.19	0.20	0.21	0.22	0.23	0.24	0.13
ϑ (DEG)	7.50	7.50	7.50	7.50	15.00	15.00	15.00	15.00	15.00	15.00	15.00	15.00	15.00	15.00	15.00	15.00	15.00	22.50	22.50	22.50	22.50	22.50	22.50	22.50	22.50	22.50	22.50	22.50	22.50	22.50	22.50	22.50	22.50	22.50	22.50	22.50	22.50	22.50	22.50	22.50	22.50	22.50	22.50	22.50	22.50	22.50	22.50	22.50	22.50	22.50	22.50	22.50	22.50	22.50	22.50	22.50

REFERNCE DWGS: For pi... A section see dwg. №. 11/3/1/01
For ge... notes see dwgs. №. 20/2/1/01 TO 20/2/1/03

Scale:	IRRIGATION & DRAINAGE STANDARDS		ISLAMIC REPUBLIC OF IR...
Date:	DWG. №. 11/3/2/15	PIPE DROP TYPE I WITH CONCRETE OUTLET TRANSITION (PIPE CONSTRUCTION DIMENSIONS)	MINISTRY OF PLAN & ...UDJET
Approved:	Sheet. №. 16 of 19	Rev. №.	TECHNICAL RESEARCH ... STANDARD BURE...

omoorepeyman.ir

TABLE # PDC 61 (Q=1.000 M^3/S , D= 1000 mm , R=1.40 m)

| | | |

TABLE # PDC 65 (Q =1.150 M^3/S , D= 1200 mm , R=1.60 m)

| | | |

TABLE # PDC 69 (Q=1·300 M^3/S , D= 1200 mm , R=1·60 m)

H (m)	0.88	0.95	1.03	1.11	1.19	1.26	1.34	1.42	1.50	1.58	1.66	1.74	1.82	1.90	1.98	2.06	2.14	2.22	2.31	2.39	2.47	2.55	2.63	2.72	2.80	2.88	2.96	3.05	3.13	3.21	3.30	3.38	3.46	3.55	3.63	3.72	3.80	3.88	3.97	4.05	4.14	4.22	4.31	4.39	4.48	4.56	4.64	4.73	4.81	4.90	4.99	5.07	5.16	5.24	5.33	5.41
L (m)	1.75	2.00	2.25	2.50	2.75	3.00	3.25	3.50	3.75	4.00	4.25	4.50	4.75	5.00	5.25	5.50	5.75	6.00	6.25	6.50	6.75	7.00	7.25	7.50	7.75	8.00	8.25	8.50	8.75	9.00	9.25	9.50	9.75	10.00	10.25	10.50	10.75	11.00	11.25	11.50	11.75	12.00	12.25	12.50	12.75	13.00	13.25	13.50	13.75	14.00	14.25	14.50	14.75	15.00	15.25	15.50
L1 (m)	1.62	1.85	2.08	2.31	2.54	2.77	3.00	3.23	3.46	3.70	3.93	4.16	4.39	4.62	4.85	5.08	5.31	5.54	5.77	6.00	6.24	6.47	6.70	6.93	7.16	7.39	7.62	7.85	8.08	8.31	8.55	8.78	9.01	9.24	9.47	9.70	9.93	10.16	10.39	10.62	10.86	11.09	11.32	11.55	11.78	12.01	12.24	12.47	12.70	12.93	13.16	13.40	13.63	13.86	14.09	14.32
L2(m)	6.00	6.00	6.00	6.00	6.00	6.00	6.00	6.00	6.00	6.00	6.00	6.00	6.00	6.00	6.00	6.00	6.00	6.00	6.00	6.00	6.00	6.00	6.00	6.00	6.00	6.00	6.00	6.00	6.00	6.00	6.00	6.00	6.00	6.00	6.00	6.00	6.00	6.00	6.00	6.00	6.00	6.00	6.00	6.00	6.00	6.00	6.00	6.00	6.00	6.00	6.00	6.00	6.00	6.00	6.00	6.00
L3(m)	0.60	0.60	0.60	0.60	0.60	0.90	0.90	0.90	1.20	1.20	0.90	0.90	0.90	0.90	0.90	1.20	1.20	1.20	1.20	1.20	1.20	1.50	1.50	1.50	1.50	1.50	1.50	1.20	1.20	1.20	1.20	1.20	1.20	1.20	1.20	1.20	1.20	1.50	1.50	1.50	1.50	1.50	1.50	1.50	1.50	1.50	1.50	1.50	1.80	1.80	1.80	1.80	1.80	1.80	1.80	1.80
H1(m)	0.67	0.76	0.86	0.96	1.05	1.15	1.24	1.34	1.43	1.53	1.63	1.72	1.82	1.91	2.01	2.10	2.20	2.30	2.39	2.49	2.58	2.68	2.77	2.87	2.97	3.06	3.16	3.25	3.35	3.44	3.54	3.63	3.73	3.83	3.92	4.02	4.11	4.21	4.30	4.40	4.50	4.59	4.69	4.78	4.88	4.97	5.07	5.17	5.26	5.36	5.45	5.55	5.64	5.74	5.84	5.93
S (m)	0.14	0.16	0.18	0.20	0.22	0.19	0.21	0.23	0.21	0.22	0.15	0.17	0.19	0.20	0.22	0.15	0.16	0.18	0.19	0.21	0.22	0.15	0.17	0.18	0.19	0.21	0.22	0.14	0.15	0.16	0.17	0.19	0.20	0.21	0.22	0.23	0.25	0.13	0.14	0.16	0.17	0.18	0.19	0.20	0.21	0.22	0.23	0.24	0.13	0.14	0.15	0.16	0.17	0.18	0.19	0.20
ϑ (DEG)	7.50	7.50	7.50	7.50	7.50	7.50	7.50	7.50	7.50	7.50	15.00	15.00	15.00	15.00	15.00	15.00	15.00	15.00	15.00	15.00	15.00	15.00	15.00	15.00	15.00	15.00	15.00	22.50	22.50	22.50	22.50	22.50	22.50	22.50	22.50	22.50	22.50	22.50	22.50	22.50	22.50	22.50	22.50	22.50	22.50	22.50	22.50	22.50	22.50	22.50	22.50	22.50	22.50	22.50	22.50	22.50

TABLE # PDC 70 (Q=1·350 M^3/S , D= 1200 mm , R=1·60 m)

H (m)	0.85	0.93	1.00	1.08	1.16	1.24	1.31	1.39	1.47	1.55	1.63	1.71	1.79	1.87	1.95	2.03	2.11	2.19	2.27	2.35	2.43	2.51	2.60	2.68	2.76	2.84	2.92	3.01	3.09	3.17	3.25	3.34	3.42	3.50	3.59	3.67	3.75	3.84	3.92	4.01	4.09	4.17	4.26	4.34	4.43	4.51	4.60	4.68	4.76	4.85	4.93	5.02	5.10	5.19	5.27	5.36
L (m)	1.75	2.00	2.25	2.50	2.75	3.00	3.25	3.50	3.75	4.00	4.25	4.50	4.75	5.00	5.25	5.50	5.75	6.00	6.25	6.50	6.75	7.00	7.25	7.50	7.75	8.00	8.25	8.50	8.75	9.00	9.25	9.50	9.75	10.00	10.25	10.50	10.75	11.00	11.25	11.50	11.75	12.00	12.25	12.50	12.75	13.00	13.25	13.50	13.75	14.00	14.25	14.50	14.75	15.00	15.25	15.50
L1 (m)	1.62	1.85	2.08	2.31	2.54	2.77	3.00	3.23	3.46	3.70	3.93	4.16	4.39	4.62	4.85	5.08	5.31	5.54	5.77	6.00	6.24	6.47	6.70	6.93	7.16	7.39	7.62	7.85	8.08	8.31	8.55	8.78	9.01	9.24	9.47	9.70	9.93	10.16	10.39	10.62	10.86	11.09	11.32	11.52	11.78	12.01	12.24	12.47	12.70	12.93	13.16	13.40	13.63	13.86	14.09	14.32
L2 (m)	6.00	6.00	6.00	6.00	6.00	6.00	6.00	6.00	6.00	6.00	6.00	6.00	6.00	6.00	6.00	6.00	6.00	6.00	6.00	6.00	6.00	6.00	6.00	6.00	6.00	6.00	6.00	6.00	6.00	6.00	6.00	6.00	6.00	6.00	6.00	6.00	6.00	6.00	6.00	6.00	6.00	6.00	6.00	6.00	6.00	6.00	6.00	6.00	6.00	6.00	6.00	6.00	6.00	6.00	6.00	6.00
L3(m)	0.60	0.60	0.60	0.60	0.90	0.90	1.20	1.20	0.90	0.90	0.90	0.90	0.90	1.20	1.20	1.20	1.20	1.20	1.20	1.50	1.50	1.50	1.50	1.50	1.20	1.20	1.20	1.20	1.20	1.20	1.20	1.20	1.20	1.50	1.50	1.50	1.50	1.50	1.50	1.50	1.50	1.50	1.50	1.50	1.50	1.80	1.80	1.80	1.80	1.80	1.80	1.80	1.80	1.80	1.80	2.10
H1 (m)	0.67	0.76	0.86	0.96	1.05	1.15	1.24	1.34	1.43	1.53	1.63	1.72	1.82	1.91	2.01	2.10	2.20	2.30	2.39	2.49	2.58	2.68	2.77	2.87	2.97	3.06	3.16	3.25	3.35	3.44	3.54	3.63	3.73	3.83	3.92	4.02	4.11	4.21	4.30	4.40	4.50	4.59	4.69	4.78	4.88	4.97	5.07	5.17	5.26	5.36	5.45	5.55	5.64	5.74	5.84	5.93
S (m)	0.17	0.19	0.21	0.23	0.20	0.22	0.20	0.22	0.15	0.17	0.19	0.20	0.22	0.15	0.17	0.18	0.20	0.21	0.23	0.16	0.18	0.19	0.21	0.22	0.14	0.15	0.17	0.18	0.19	0.20	0.22	0.23	0.24	0.13	0.14	0.16	0.17	0.18	0.19	0.20	0.21	0.23	0.24	0.25	0.14	0.15	0.16	0.17	0.18	0.19	0.20	0.21	0.22	0.23	0.25	0.13
ϑ (DEG)	7.50	7.50	7.50	7.50	7.50	7.50	7.50	7.50	15.00	15.00	15.00	15.00	15.00	15.00	15.00	15.00	15.00	15.00	15.00	15.00	15.00	15.00	15.00	15.00	22.50	22.50	22.50	22.50	22.50	22.50	22.50	22.50	22.50	22.50	22.50	22.50	22.50	22.50	22.50	22.50	22.50	22.50	22.50	22.50	22.50	22.50	22.50	22.50	22.50	22.50	22.50	22.50	22.50	22.50	22.50	22.50

TABLE # PDC 71 (Q=1·400 M^3/S , D= 1200 mm , R=1·60 m)

H (m)	0.83	0.90	0.98	1.05	1.13	1.21	1.28	1.36	1.44	1.52	1.60	1.68	1.75	1.83	1.91	1.99	2.07	2.15	2.23	2.31	2.40	2.48	2.56	2.64	2.72	2.80	2.88	2.97	3.05	3.13	3.21	3.30	3.38	3.46	3.54	3.63	3.71	3.79	3.88	3.96	4.04	4.13	4.21	4.29	4.38	4.46	4.55	4.63	4.71	4.80	4.88	4.97	5.05	5.14	5.22	5.31
L (m)	1.75	2.00	2.25	2.50	2.75	3.00	3.25	3.50	3.75	4.00	4.25	4.50	4.75	5.00	5.25	5.50	5.75	6.00	6.25	6.50	6.75	7.00	7.25	7.50	7.75	8.00	8.25	8.50	8.75	9.00	9.25	9.50	9.75	10.00	10.25	10.50	10.75	11.00	11.25	11.50	11.75	12.00	12.25	12.50	12.75	13.00	13.25	13.50	13.75	14.00	14.25	14.50	14.75	15.00	15.25	15.50
L1 (m)	1.62	1.85	2.08	2.31	2.54	2.77	3.00	3.23	3.46	3.70	3.93	4.16	4.39	4.62	4.85	5.08	5.31	5.54	5.77	6.00	6.24	6.47	6.70	6.93	7.16	7.39	7.62	7.85	8.08	8.31	8.55	8.78	9.01	9.24	9.47	9.70	9.93	10.16	10.39	10.62	10.86	11.09	11.32	11.55	11.78	12.01	12.24	12.47	12.70	12.93	13.16	13.40	13.63	13.86	14.09	14.32
L2(m)	6.00	6.00	6.00	6.00	6.00	6.00	6.00	6.00	6.00	6.00	6.00	6.00	6.00	6.00	6.00	6.00	6.00	6.00	6.00	6.00	6.00	6.00	6.00	6.00	6.00	6.00	6.00	6.00	6.00	6.00	6.00	6.00	6.00	6.00	6.00	6.00	6.00	6.00	6.00	6.00	6.00	6.00	6.00	6.00	6.00	6.00	6.00	6.00	6.00	6.00	6.00	6.00	6.00	6.00	6.00	6.00
L3(m)	0.60	0.60	0.90	0.90	1.20	1.20	1.50	0.90	0.90	0.90	0.90	1.20	1.20	1.20	1.20	1.20	1.50	1.50	1.50	1.50	1.50	1.20	1.20	1.20	1.20	1.20	1.20	1.20	1.20	1.20	1.50	1.50	1.50	1.50	1.50	1.50	1.50	1.50	1.50	1.50	1.80	1.80	1.80	1.80	1.80	1.80	1.80	1.80	1.80	1.80	1.80	2.10	2.10	2.10	2.10	2.10
H1 (m)	0.67	0.76	0.86	0.96	1.05	1.15	1.24	1.34	1.43	1.53	1.63	1.72	1.82	1.91	2.01	2.10	2.20	2.30	2.39	2.49	2.58	2.68	2.77	2.87	2.97	3.06	3.16	3.25	3.35	3.44	3.54	3.63	3.73	3.83	3.92	4.02	4.11	4.21	4.30	4.40	4.50	4.59	4.69	4.78	4.88	4.97	5.07	5.17	5.26	5.36	5.45	5.55	5.64	5.74	5.84	5.93
S (m)	0.19	0.21	0.19	0.21	0.19	0.21	0.19	0.16	0.18	0.20	0.22	0.15	0.17	0.19	0.20	0.22	0.15	0.17	0.18	0.20	0.21	0.13	0.15	0.16	0.18	0.19	0.21	0.22	0.23	0.25	0.13	0.15	0.16	0.17	0.19	0.20	0.21	0.22	0.24	0.25	0.14	0.15	0.16	0.17	0.18	0.20	0.21	0.22	0.23	0.24	0.25	0.14	0.15	0.16	0.17	0.18
ϑ (DEG)	7.50	7.50	7.50	7.50	7.50	7.50	7.50	15.00	15.00	15.00	15.00	15.00	15.00	15.00	15.00	15.00	15.00	15.00	15.00	15.00	15.00	22.50	22.50	22.50	22.50	22.50	22.50	22.50	22.50	22.50	22.50	22.50	22.50	22.50	22.50	22.50	22.50	22.50	22.50	22.50	22.50	22.50	22.50	22.50	22.50	22.50	22.50	22.50	22.50	22.50	22.50	22.50	22.50	22.50	22.50	22.50

TABLE # PDC 72 (Q=1·450 M^3/S , D= 1200 mm , R=1·60 m)

H (m)	0.80	0.88	0.95	1.03	1.10	1.18	1.26	1.33	1.41	1.49	1.57	1.64	1.72	1.80	1.88	1.96	2.04	2.12	2.20	2.28	2.36	2.44	2.52	2.60	2.68	2.76	2.84	2.93	3.01	3.09	3.17	3.25	3.33	3.42	3.50	3.58	3.66	3.75	3.83	3.91	4.00	4.08	4.16	4.25	4.33	4.41	4.50	4.58	4.66	4.75	4.83	4.92	5.00	5.08	5.17	5.25
L (m)	1.75	2.00	2.25	2.50	2.75	3.00	3.25	3.50	3.75	4.00	4.25	4.50	4.75	5.00	5.25	5.50	5.75	6.00	6.25	6.50	6.75	7.00	7.25	7.50	7.75	8.00	8.25	8.50	8.75	9.00	9.25	9.50	9.75	10.00	10.25	10.50	10.75	11.00	11.25	11.50	11.75	12.00	12.25	12.50	12.75	13.00	13.25	13.50	13.75	14.00	14.25	14.50	14.75	15.00	15.25	15.50
L1(m)	1.62	1.85	2.08	2.31	2.54	2.77	3.00	3.23	3.46	3.70	3.93	4.16	4.39	4.62	4.85	5.08	5.31	5.54	5.77	6.00	6.24	6.47	6.70	6.93	7.16	7.39	7.62	7.85	8.08	8.31	8.55	8.78	9.01	9.24	9.47	9.70	9.93	10.16	10.39	10.62	10.86	11.09	11.32	11.55	11.78	12.01	12.24	12.47	12.70	12.93	13.16	13.40	13.63	13.86	14.09	14.32
L2(m)	6.00	6.00	6.00	6.00	6.00	6.00	6.00	6.00	6.00	6.00	6.00	6.00	6.00	6.00	6.00	6.00	6.00	6.00	6.00	6.00	6.00	6.00	6.00	6.00	6.00	6.00	6.00	6.00	6.00	6.00	6.00	6.00	6.00	6.00	6.00	6.00	6.00	6.00	6.00	6.00	6.00	6.00	6.00	6.00	6.00	6.00	6.00	6.00	6.00	6.00	6.00	6.00	6.00	6.00	6.00	6.00
L3(m)	0.60	0.90	0.90	1.20	1.20	0.90	0.90	0.90	0.90	1.20	1.20	1.20	1.20	1.20	1.50	1.50	1.50	1.50	1.50	1.20	1.20	1.20	1.20	1.20	1.20	1.20	1.20	1.50	1.50	1.50	1.50	1.50	1.50	1.50	1.50	1.50	1.80	1.80	1.80	1.80	1.80	1.80	1.80	1.80	1.80	1.80	2.10	2.10	2.10	2.10	2.10	2.10	2.10	2.10	2.10	2.10
H1(m)	0.67	0.76	0.86	0.96	1.05	1.15	1.24	1.34	1.43	1.53	1.63	1.72	1.82	1.91	2.01	2.10	2.20	2.30	2.39	2.49	2.58	2.68	2.77	2.87	2.97	3.06	3.16	3.25	3.35	3.44	3.54	3.63	3.73	3.83	3.92	4.02	4.11	4.21	4.30	4.40	4.50	4.59	4.69	4.78	4.88	4.97	5.07	5.17	5.26	5.36	5.45	5.55	5.64	5.74	5.84	5.93
S (m)	0.22	0.20	0.22	0.20	0.22	0.16	0.18	0.19	0.21	0.15	0.17	0.19	0.20	0.22	0.16	0.17	0.19	0.20	0.22	0.14	0.16	0.17	0.19	0.20	0.22	0.23	0.25	0.14	0.15	0.16	0.18	0.19	0.20	0.22	0.23	0.24	0.13	0.15	0.16	0.17	0.18	0.20	0.21	0.22	0.23	0.25	0.13	0.14	0.16	0.17	0.18	0.19	0.20	0.21	0.23	0.24
ϑ (DEG)	7.50	7.50	7.50	7.50	7.50	15.00	15.00	15.00	15.00	15.00	15.00	15.00	15.00	15.00	15.00	15.00	15.00	15.00	15.00	22.50	22.50	22.50	22.50	22.50	22.50	22.50	22.50	22.50	22.50	22.50	22.50	22.50	22.50	22.50	22.50	22.50	22.50	22.50	22.50	22.50	22.50	22.50	22.50	22.50	22.50	22.50	22.50	22.50	22.50	22.50	22.50	22.50	22.50	22.50	22.50	22.50

REFERNCE DWGS: For plan & section see dwg. Nº 11/3/1/01
For general notes see dwgs. Nº. 20/2/1/01 TO 20/2/1/03

Scale:	IRRIGATION & DRAINAGE STANDARDS		
Date:	DWG. Nº. 11/3/2/16	PIPE DROP TYPE I WITH CONCRETE OUTLET TRANSITION (PIPE CONSTRUCTION DIMENSIONS)	
Approved:	Sheet. Nº 19 of 19	Rev. Nº.	

ISLAMIC REPUBLIC OF IRAN
MINISTRY OF PLAN & BUDJET
TECHNICAL RESEARCH AND STANDARD BUREAU

omoorepeyman.ir

STRUCTURE'S DESCRIPTION

Pipe drop conveys water from a higher elevation to a lower elevation through a piping system.

STRUCTURE COMPONENTS

Pipe drop consists of: Upstream Transition, Inlet Structure, Pipe and Outlet Transition.

APPLICATION

a. Pipe drop could be used where the drop in elevation is with in the range of 0.90 to 4.6 meters
b. The inlet may serve as a control device to regulate the water depth at the utream of the canal.
c. The inlet and outlet can be adapted to either earth or a lined water way.
d. The outlet can be adapted to a water way where there is no downstream water surface control.
e. The inlet can be incorporated either with a control notch or with a check.
f. Pipe drop can be used under another water-way or a road way.

CLASSIFICATION

In general, two types of pipe drops are introduced:

Type I - Which is used as an inline canal structure where the possibility of clogging is minimal.
This type of pipe drop is used either with earth or concrete outlet transition.
See Dwgs.No.11/2/1/01 and 11/3/1/01.

Type II - Which is used as an inline canal structure or as a cross-drainage structure.
This type of pipe drop is used either with a baffled outlet or a stilling pool.
See Dwg.No. 11/4/1/01.

How to fit a pipe drop with the design condition

For fitting a pipe drop to the design condition proceed with the following steps:

1. Decide which type of pipe drops well suit the desired condition.

   Recommendation

   There are three ways by which a pipe drop can be selected:

   Use the drop selection model Dwg.No. 11/0/4/01 or

   Use Designer's own judgement and/or

   Use the following general rule:

   - If the possibility of clogging is minimal, canal is lined and $Q \leq 1.5$ m^3/s select pipe drop type I with concrete outlet transition.
   - If the possibility of clogging is in minimal but canal is not lined and $Q \leq 0.70$ m^3/s select pipe drop type I with earth outlet transition.
   - If $Q > 1.5$ m^3/s or the structure is used as cross-drainage or sediment and debris are carried in the water, use type II pipe drop with the following considerations:
     - Use type II with stilling pool where water carries weeds.
     - Use type II with baffled outlet in other cases.

2. Read elevations of A and H from the profile sheets.

   let:

   El.A = Elevation of point A.
   El.H = Elevation of point H.
   El.A_W = Elevation of normal water surface at point A.
   El.H_W = Elevation of normal water surface at point H.
   El.A_E = Elevation of energy gradient at point A.
   El.H_E = Elevation of energy gradient at point H.
   H = El.A_E - El.H_E

3. Select type of inlet structure.

   Recommendation

   - If the upstream water level is being maintained and flow varies very often, use control notch.
   - If the upstream water level is being maintained and flow does not vary often, use check.

4. If the selection is made on type II, follow the step 9 below. Otherwise proceed with the following steps.

5. From the table named " Pipe Selection Table " Dwg.No.11/2/2/01 select pipe diameter(D).

6. From the tables named " Pipe Drop with Concrete Outlet Transition " or " Pipe Drop with Earth Outlet Transition " Dwg.No. 11/2/2/01 select the proper table which best fits to the canal flow(Q) and selected D.
   These tables are designated by PDE and PDC, where PDE is referred to pipe drop with earth outlet transition and PDC to pipe drop with concrete outlet transition.

7. Find relevant table and read R at the top of the table.
   Match the calculated H to the values of H given in the first row of the table and select the column with nearest value of H to the calculated one.
   From the selected column read the following construction dimensions:

   L, L_1, L_2, L_3, H_1, S and θ.

   S, value designate the expected submergncy but this figure should be recalculated.

8. Calculate the rest of elevations and submergences(S).

   El.D = El.A_W - R - H_1
   El.E = El.D - 0.005 L_2
   El.F = El.E + L_3 sin θ
   El.F' = El.F + D cos θ If earth outlet.
   El.F' = El.F + D cos θ + D sin$^2\theta$/cos θ If concrete outlet.
   S = El.H_W - El.F'

   GOTO Step 11.

9. See Dwg.No. 11/2/2/01 for pipe selection and receiving the basic design considerations for adaption the pipe drop to the existing condition.
10. If the outlet is baffled, refer to Dwg.No. 11/4/1/01 . If it is stilling pool refer to Dwg.No. 14/10/1/01.
11. To obtain the structural data for inlet structure proceed as follows:

    If control notch is selected, refer to Dwg. No.12/5/1/01.

    If check is selected, refer to Dwgs.No. 12/1/1/01 & 12/1/1/02.

    If you are adapting type II pipe drop, it is possible to use a transition as an inlet. In this case the structure does not regulate the upstream water surface

    In case of selecting was the transition as an inlet, the transition type 1,2,3 and 4 may be used. See Dwgs.No.13/7/1/01, 13/8/1/01, 13/9/1/01 and 13/10/1/01 Respectively.

EXAMPLE

Select a drop which has also to be used for controling the upstream water level for a flow ranging from 500 to 900 lit/s.

The hydraulic properties of upstream and downstream of the canal are as follows:

Q = 900 lit/s	m = 1.5:1
B = 0.80 m.	n = 0.014
Y = 0.55	S = 0.0009
V = 1.00 m/s	

2) El.A = 110.00
El.H = 108.09
El.A_W = El.A + Y = 110.00 + 0.55 = 110.55
El.H_W = El.H + Y = 108.09 + 0.55 = 108.64
El.A_E = El.A_W + $V^2/2g$ = 110.55 + $(1.00)^2/2g$ = 110.60
El.H_E = El.H_W + $V^2/2g$ = 108.64 + $(1.00)^2/2g$ = 108.69
H = El.A_E - El.H_E = 110.60 - 108.69 = 1.91 m.

3) Control notch is selected as inlet structure.

5) From the pipe selection table:
D = 900 mm.

6) By entering Q = 0.90 m^3/s and D = 900 mm. into the " Pipe Drop with Concrete Outlet Transition Table " Dwg.No.11/2/2/01. Read table No. PDC 53. This table is shown on Dwg.No.11/3/2/14.

7) From table PDC 53 :
R = 1.30 m.
Column which its H = 1.93 fits the calculated H value. Then:
L = 6.00 m. L_1 = 5.54 m.
L_2 = 4.50 m. L_3 = 1.50 m.
H_1 = 2.30 m. θ = 22.5
S = 0.17 m.

8) El.D = El.A_W - R - H_1
= 110.55 - 1.30 - 2.30 = 106.95
El.E = El.D - 0.005 L_2
= 106.95 - 0.005 x 4.50 = 106.93
El.F = El.E + L_3 sin 22.5
= 106.93 + 1.50 x 0.38268 = 107.50
El.F' = El.F + D cos 22.5 + D sin$^2\theta$ /cos θ
= 107.50 + 0.9x0.9239 + 0.9x0.14644/0.9239 = 108.47
S = El.H_W - El.F' = 108.64 - 108.47 = 0.17 m.

11) For calculating the dimensions of control notch follow the procedure given at Dwg.No.12/5/2/01.

The inlet structure should control upstream water surface for the range of Q = 500 to 900 lit/s.

for Q = 0.90 m^3/s :
Y = 0.55 m.
V = 1.00 m/s
E = 0.55 + $\frac{(1.00)^2}{2g}$ = 0.60 m.

for Q = 0.500 m^3/s :
Y = 0.41 m.
V = 0.86 m/s
E = 0.41 + $\frac{(0.86)^2}{2g}$ = 0.45 m.

The first graphs satisfies the condition, so :

P = 0.40 m. & W = 1.25
T ≥ Y for Q = 0.90 T = 0.55
N = P + 2WT = 0.40 + 2 x 1.25 x 0.55 = 1.375 ≃ 1.38

Determine the inlet box inside (b_1):

b_1 = N + 0.30 = 1.38 + 0.30 = 1.68 m.

and

b_1 = D + 0.60 = 0.90 + 0.60 = 1.50 m.

which b_1 = 1.68 m. is selected.

Determine the elevation top of the notch:

El.top of the notch = El.A + T
= 110 + 0.55 = 110.55

The rest of the dimensions of inlet structure can be extracted from the table given on Dwg.No.12/5/1/01 selecting structure No. 900-1, where 900 refers to pipe diameter and 1 refers to structure which its R value is equal to the R value of the pipe drop.

REFERENCE DWGS:

Scale:	IRRIGATION & DRAINAGE STANDARDS	ISLAMIC REPUBLIC OF IRAN
Date:	DWG No. 11/2,3/0/01	MINISTRY OF PLAN & BUDJET
Approved:	Sheet No. 1 of 1 Rev No.	PIPE DROP DESIGN PROCEDURE AND EXAMPLE
		TECHNICAL RESEARCH AND STANDARDS BUREAU

www.tabarestan.info تبرستان

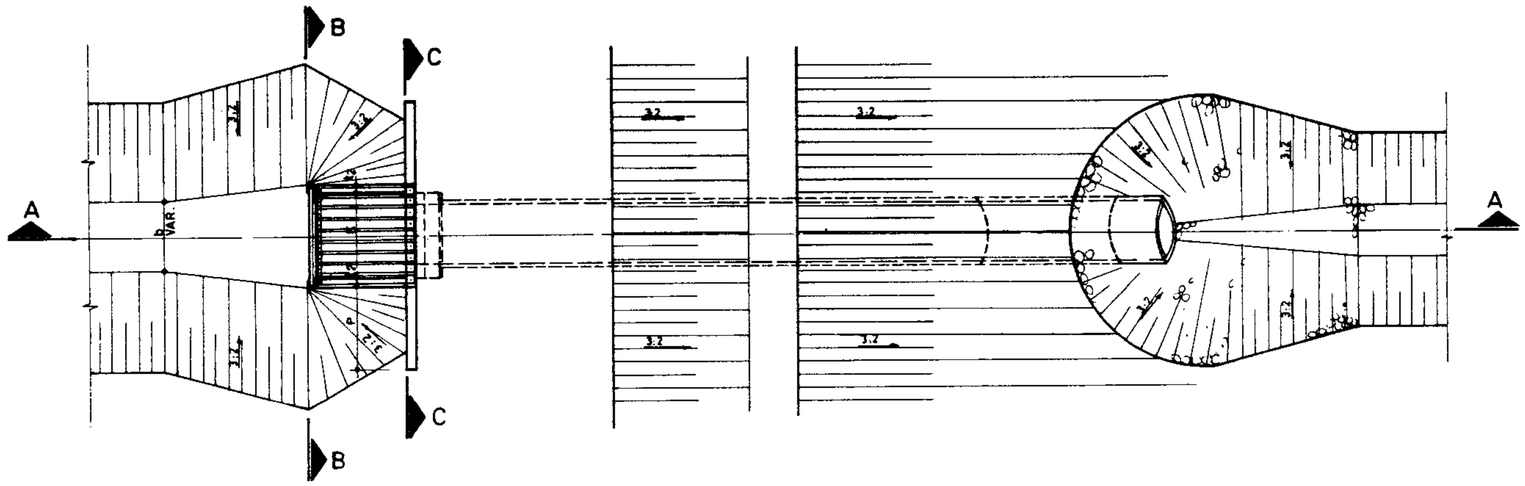

PLAN

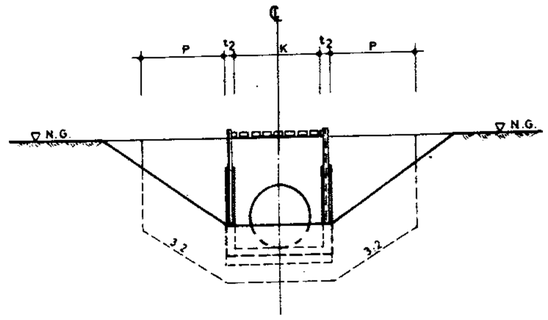

SECTION B B.

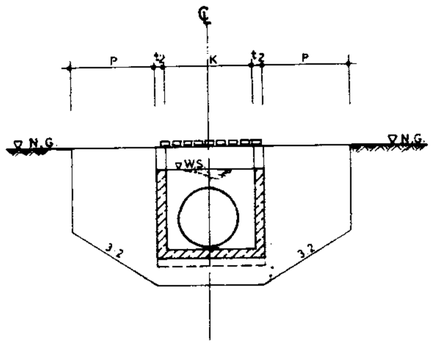

SECTION C.C.

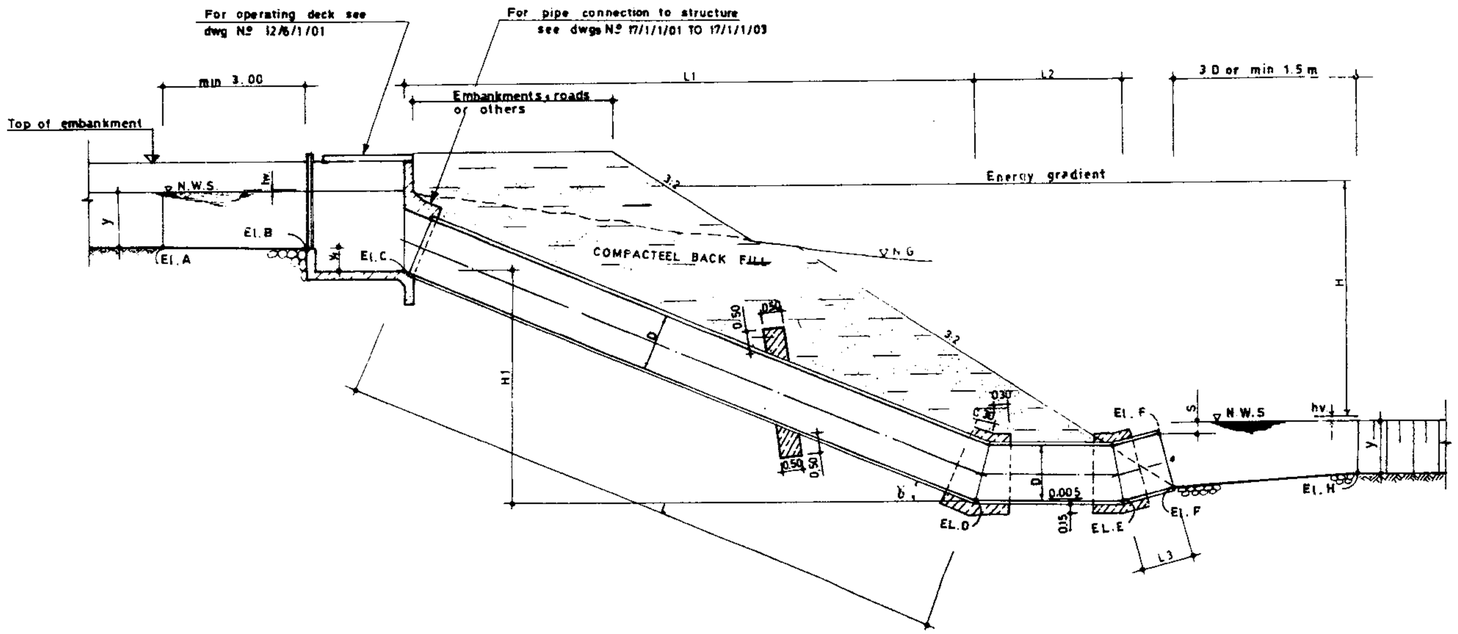

SECTION A.A.

NOTES:

-All the pipes shown in this dwgs are either precast reinforced concrete pressure pipe or asbestos-cement pressure pipe according to ASTM standard.

REFERENCE DWGS: For detail & dimension of inlet structure see dwg. N.º 12/6/1/02
For pipe drop construction dimension see dwgs. N.º 11/2/2/01 TO 11/2/2/09

Scale: N.T.S	IRRIGATION & DRAINAGE STANDARDS		
Date:	DWG. N.º 11/2/1/01	PIPE DROP TYPE I WITH EARTH OUTLET TRANSITION	
Approved:	Sheet N.º 1 of 10	Rev. N.º	PLAN & SECTION

ISLAMIC REPUBLIC OF IRAN
MINISTRY OF PLAN & BUDJET
TECHNICAL RESEARCH AND STANDARD BUREAU

امورپیمان
amoorepeyman.ir

PIPE SELECTING TABLE

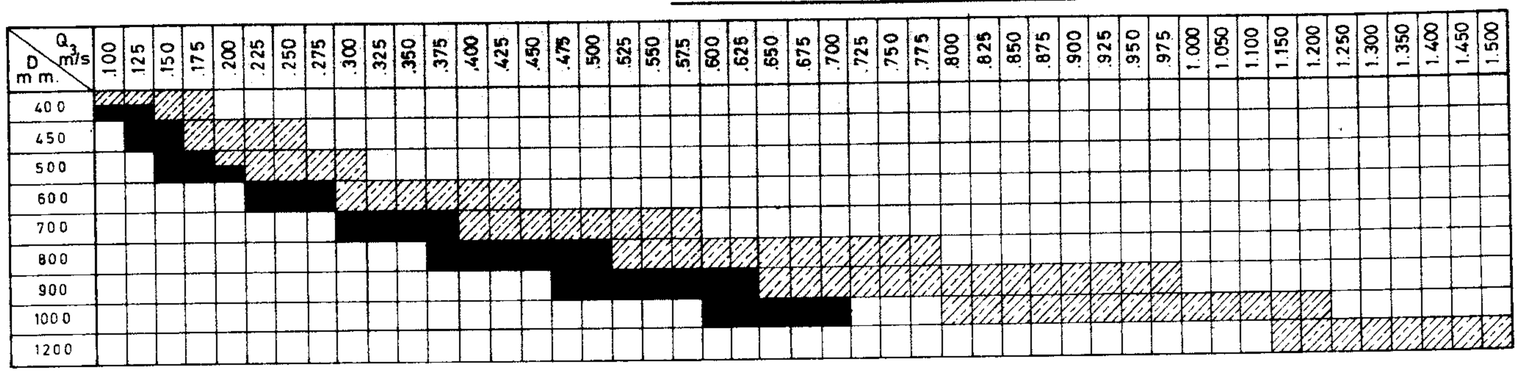

PIPE DROP WITH CONCRETE OUTLET TRANSITION

Q m³/s	D m.m.	H (m) Min.	H (m) Max.	TABLE Nº.	DRAWING Nº.
0.100	400	0.83	5.54	PDC 01	11/3/2/01
0.125	400	0.74	5.31	PDC 02	〃
0.150	400	0.65	5.08	PDC 03	〃
0.175	400	0.56	4.86	PDC 04	〃
0.175	450	0.66	5.16	PDC 05	11/3/2/02
0.200	450	0.59	4.98	PDC 06	〃
0.200	500	0.75	5.32	PDC 07	〃
0.225	450	0.53	4.80	PDC 08	〃
0.225	500	0.69	5.17	PDC 09	11/3/2/03
0.250	450	0.47	4.63	PDC 10	〃
0.250	500	0.64	5.03	PDC 11	〃
0.275	500	0.58	4.88	PDC 12	〃
0.300	500	0.53	4.74	PDC 13	11/3/2/04
0.300	600	0.76	5.30	PDC 14	〃
0.325	600	0.72	5.20	PDC 15	〃
0.350	600	0.68	5.10	PDC 16	〃
0.375	600	0.64	5.00	PDC 17	11/3/2/05
0.400	600	0.60	4.90	PDC 18	〃
0.400	700	0.80	5.37	PDC 19	〃
0.425	600	0.56	4.80	PDC 20	〃
0.425	700	0.77	5.29	PDC 21	11/3/2/06
0.450	700	0.73	5.21	PDC 22	〃
0.475	700	0.70	5.14	PDC 23	〃
0.500	700	0.67	5.06	PDC 24	〃
0.525	700	0.64	4.99	PDC 25	11/3/2/07
0.525	800	0.82	5.40	PDC 26	〃
0.550	700	0.61	4.91	PDC 27	〃
0.550	800	0.80	5.34	PDC 28	〃
0.575	700	0.58	4.84	PDC 29	11/3/2/08
0.575	800	0.77	5.28	PDC 30	〃
0.600	800	0.75	5.22	PDC 31	〃
0.625	800	0.72	5.16	PDC 32	〃
0.650	800	0.70	5.10	PDC 33	11/3/2/9
0.650	900	0.86	5.45	PDC 34	〃
0.675	800	0.68	5.05	PDC 35	〃
0.675	900	0.84	5.41	PDC 36	〃

Q m³/s	D m.m.	H (m) Min.	H (m) Max.	TABLE Nº.	DRAWING Nº.
0.700	800	0.65	4.99	PDC 37	11/3/2/10
0.700	900	0.82	5.36	PDC 38	〃
0.725	800	0.63	4.93	PDC 39	〃
0.725	900	0.80	5.32	PDC 40	〃
0.750	800	0.60	4.88	PDC 41	11/3/2/11
0.750	900	0.78	5.27	PDC 42	〃
0.775	800	0.58	4.82	PDC 43	〃
0.775	900	0.76	5.23	PDC 44	〃
0.800	900	0.74	5.18	PDC 45	11/3/2/12
0.800	1000	0.97	5.50	PDC 46	〃
0.825	900	0.72	5.13	PDC 47	〃
0.825	1000	0.88	5.46	PDC 48	〃
0.850	900	0.70	5.09	PDC 49	11/3/2/13
0.850	1000	0.86	5.42	PDC 50	〃
0.875	900	0.68	5.04	PDC 51	〃
0.875	1000	0.84	5.38	PDC 52	〃
0.900	900	0.66	5.00	PDC 53	11/3/2/14
0.900	1000	0.82	5.35	PDC 54	〃
0.925	900	0.65	4.95	PDC 55	〃
0.925	1000	0.81	5.31	PDC 56	〃
0.950	900	0.63	4.91	PDC 57	11/3/2/15
0.950	1000	0.79	5.27	PDC 58	〃
0.975	900	0.61	4.86	PDC 59	〃
0.975	1000	0.77	5.23	PDC 60	〃
1.000	1000	0.76	5.20	PDC 61	11/3/2/16
1.050	1000	0.73	5.12	PDC 62	〃
1.100	1000	0.69	5.05	PDC 63	〃
1.150	1000	0.66	4.97	PDC 64	〃
1.150	1200	1.27	5.57	PDC 65	11/3/2/17
1.200	1000	0.63	4.90	PDC 66	〃
1.200	1200	1.16	5.52	PDC 67	〃
1.250	1200	0.98	5.47	PDC 68	〃
1.300	1200	0.88	5.41	PDC 69	11/3/2/18
1.350	1200	0.85	5.36	PDC 70	〃
1.400	1200	0.83	5.31	PDC 71	〃
1.450	1200	0.80	5.25	PDC 72	〃

PIPE DROP WITH EARTH OUTLET TRANSITION

Q m³/s	D m.m.	H (m) Min.	H (m) Max.	TABLE Nº.	DRAWING Nº.
0.100	400	0.83	5.01	PDE 01	11/2/2/02
0.125	400	0.74	4.79	PDE 02	〃
0.125	450	0.81	5.00	PDE 03	〃
0.150	450	0.74	4.82	PDE 04	〃
0.150	500	0.88	5.09	PDE 05	11/2/2/03
0.175	500	0.82	4.94	PDE 06	〃
0.200	500	0.75	4.80	PDE 07	〃
0.225	600	0.98	5.09	PDE 08	〃
0.250	600	0.85	4.99	PDE 09	11/2/2/04
0.275	600	0.80	4.89	PDE 10	〃
0.300	700	1.26	5.15	PDE 11	〃
0.325	700	0.98	5.07	PDE 12	〃
0.350	700	0.87	5.00	PDE 13	11/2/2/05
0.375	700	0.83	4.92	PDE 14	〃
0.375	800	1.65	5.22	PDE 15	〃
0.400	800	1.45	5.16	PDE 16	〃

Q m³/s	D m.m.	H (m) Min.	H (m) Max.	TABLE Nº.	DRAWING Nº.
0.425	800	1.17	5.11	PDE 17	11/2/2/06
0.450	800	0.98	5.05	PDE 18	〃
0.475	800	0.88	4.19	PDE 19	〃
0.475	900	1.94	5.26	PDE 20	〃
0.500	800	0.85	4.94	PDE 21	11/2/2/07
0.500	900	1.74	5.22	PDE 22	〃
0.525	900	1.55	5.17	PDE 23	〃
0.550	900	1.36	5.12	PDE 24	〃
0.575	900	1.17	5.07	PDE 25	11/2/2/08
0.600	900	1.07	5.03	PDE 26	〃
0.600	1000	2.13	5.28	PDE 27	〃
0.625	900	0.88	4.99	PDE 28	〃
0.625	1000	1.94	5.24	PDE 29	11/2/2/09
0.650	1000	1.75	5.20	PDE 30	〃
0.675	1000	1.55	5.17	PDE 31	〃
0.700	1000	1.45	5.13	PDE 32	〃

Notes for pipe selection table:

1 – The max. capacity of standard pipe drops presented in this section are as follows.
- Pipe drop with earth outlet transition 700 lit/s
- Pipe drop with concrete outlet transition 1500 lit/s

2 – The pipe selection table is designed in the manner that the full pipe velocity of water not exceeding 1.00 m/s for pipe drop with earth transition and 1.50 m/s for pipe drop with concrete transiton.

3 – Mark ▨ indicates pipe drop with concrete outlet and ■ indicates pipe drop with earth outlet.

Notes for pipe drop with concrete and earth transition tables:

1 – The min. & max. of (H) shown on these tables indicates the range of the drop provided on the corresponding tables but in practice it is advisable that the range be bounded between 0.90 to 4.60 meters.

2 – Table Nos such PDC 08 or PDE 13 are considered as structure Nos.

REFERENCE DWGS: ... plan & section see dwg. Nº 11/2/1/01

Scale:

Date:

Approved:

IRRIGATION & DRAINAGE STANDARDS

TYPE I

PIPE DROP WITH EARTH OR CONCRETE OUTLET TRANSITION REF. TABLES

DWG. Nº 11/2/2/01

Sheet Nº 2 of 10 . Rev. Nº

ISLAMIC REPUBLIC OF ...

MINISTRY OF PLA... BUDJET

TECHNICAL RESEAR... AND STANDARD BURE...

omoorepeyman.ir

TABLE # PDE.01 (Q = 0.100 M^3/S , D = 400 mm , R = 0.80 m)

H (m)	0.83	0.91	0.99	1.07	1.15	1.24	1.3	1.40	1.48	1.57	1.65	1.73	1.82	1.90	1.99	2.07	2.15	2.24	2.32	2.41	2.49	2.58	2.67	2.75	2.84	2.92	3.01	3.09	3.18	3.27	3.35	3.44	3.53	3.61	3.70	3.79	3.88	3.96	4.05	4.13	4.22	4.31	4.40	4.49	4.57	4.66	4.75	4.84	4.93	5.01
L (m)	1.75	2.00	2.25	2.50	2.75	3.00	3.25	3.50	3.75	4.00	4.25	4.50	4.75	5.00	5.25	5.50	5.75	6.00	6.25	6.50	6.75	7.00	7.25	7.50	7.75	8.00	8.25	8.50	8.75	9.00	9 25	9 50	9 75	10 00	10 25	10 50	10 75	11 00	11 25	11 50	11.75	12.00	12.25	12.50	12.75	13.00	13.25	13.50	13.70	14.00
L1 (m)	1.62	1.85	2.08	2.31	2.54	2.77	3.00	3.23	3.46	3.70	3.93	4.16	4.39	4.62	4.85	5.08	5.31	5.54	5.77	6.00	6.24	6.47	6.70	6.93	7.16	7.39	7.62	7.85	8.08	8.31	8.55	8.78	9.01	9.24	9.47	9.70	9.93	10.16	10.39	10.62	10.86	11.09	11.32	11.55	11.78	12.01	12.24	12.47	12.70	12.93
L2(m)	2.30	2.40	2.40	2.50	2.50	2.60	2.50	2.70	2.70	2.80	2.80	2.90	2.90	3.00	3.00	3.00	3.10	3.10	3.20	3.20	3.20	3.30	3.30	3.30	3.40	3.40	3.40	3.50	3.50	3.50	3.60	3.60	3.60	3.70	3.70	3.70	3.80	3.80	3.80	3.90	3.90	3.90	4.00	4.00	4.00	4.00	4.10	4.10	4.10	4.20
L3(m)	0.60	0.60	0.60	0.60	0.90	0.90	0.90	1.20	1.20	1.20	0.90	0.90	0.90	0.90	0.90	0.90	0.90	1.20	1.20	1.20	1,20	1.20	1.20	1.20	1.50	1.50	1.50	1.50	1.50	1.50	1.50	1.50	1.20	1.20	1.20	1.20	1.20	1.20	1.20	1.20	1.20	1.20	1.20	1.20	1.20	1.20	1.20	1.50	1.50	1.50
H1(m)	0.67	0.76	0.86	0.96	1.05	1.15	1.24	1.34	1.43	1.53	1.63	1.72	1.82	1.91	2.01	2.10	2.20	2.30	2.39	2.49	2.58	2.68	2.77	2.87	2.97	3.06	3.16	3.25	3.35	3.44	3.54	3.63	3.73	3.83	3.92	4.02	4.11	4.21	4.30	4.40	4.50	4.59	4.69	4.78	4.88	4.97	5.07	5.17	5.26	5.36
S (m)	0.17	0.19	0.20	0.22	0.19	0.21	0.22	0.19	0.21	0.22	0.15	0.16	0.17	0.19	0.20	0.21	0.22	015	0.16	0.17	0.18	0.19	0.20	0.21	0.14	0.15	0.16	0.17	0.18	0.19	0.20	0.21	0.12	0.13	0.14	0.15	0.16	0.17	0.18	0.19	0.19	0.20	0.21	0.22	0.23	0.23	0.24	0.13	0.13	0.14
ϑ (DEG)	7.50	7.50	7.50	7.50	7.50	7.50	7.50	7.50	7.50	7.50	15.00	15.00	15.00	15.00	15.00	15.00	15.00	15.00	15.00	15.00	15.00	15.00	15.00	15.00	15.00	15.00	15.00	15.00	15.00	15.00	15.00	15.00	22.50	22.50	22.50	22.50	22.50	22.50	22.50	22.50	22.50	22.50	22.50	22.50	22.50	22.50	22.50	22.50	22.50	22.50

TABLE # PDE.02 (Q = 0.125 M^3/S , D = 400 mm , R = 0.80 m)

H (m)	0.74	0.81	0.89	0.97	1.04	1.12	1.20	1.28	1.36	1.44	1.52	1.60	1.68	1.76	1.84	1.92	2.01	2.09	2.17	2.25	2.34	2.42	2.50	2.58	2.67	2.75	2.84	2.92	3.00	3.09	3.17	3.26	3.34	3.42	3.51	3.59	3.68	3.76	3.85	3.93	4.02	4.10	4.19	4.28	4.36	4.45	4.53	4.62	4.71	4.79
L (m)	1.75	2.00	2.25	2.50	2.75	3.00	3.25	3.50	3.75	4.00	4.25	4.50	4.75	5.00	5.25	5.50	5.75	6.00	6.25	6.50	6.75	7.00	7.25	7.50	7.75	8.00	8.25	8.50	8.75	9.00	9.25	9.50	9.75	10.00	10.25	10.50	10.75	11.00	11.25	11.50	11.75	12.00	12.25	12.50	12.75	13.00	13.25	13.50	13.75	14.00
L1 (m)	1.62	1.85	2.08	2.31	2.54	2.77	3.00	3.23	3.46	3.70	3.93	4.16	4.39	4.62	4.85	5.08	5.31	5.54	5.77	6.00	6.24	6.47	6.70	6.93	7.16	7.39	7.62	7.85	8.08	8.31	8.55	8.78	9.01	9.24	9.47	9.70	9.93	10.16	10.39	10.62	10.86	11.09	11.32	11.55	11.78	12.01	12.24	12.47	12.70	12.93
L2(m)	2.60	2.70	2.70	2.80	2.90	2.90	3.00	3.10	3.10	3.20	3.20	3.30	3.30	3.40	3.40	3.50	3.50	3.60	3.60	3.70	3.70	3.80	3.80	3.90	3.90	4.00	4.00	4.10	4.10	4.10	4.20	4.20	4.30	4.30	4.30	4.40	4.40	4.50	4.50	4.50	4.60	4.60	4.60	4.70	4.70	4.80	4.80	4.80	4.90	4.90
L3(m)	1.20	1.20	0.90	0.90	0.90	0.90	0.90	1.20	1.20	1.20	1.20	1.20	1.50	1.50	1.50	1.50	1.50	1.20	1.20	1.20	1.20	1.20	1.20	1.20	1.20	1.20	1.50	1.50	1.50	1.50	1.50	1.50	1.50	1.50	1.50	1.50	1.50	1.80	1.80	1.80	1.80	1.80	1.80	1.80	1.80	1.80	1.80	1.80	1.80	2.10
H1(m)	0.67	0.76	0.86	0.96	1.05	1.15	1.24	1.34	1.43	1.53	1.63	1.72	1.82	1.91	2.01	2.10	2.20	2.30	2.39	2.49	2.58	2.68	2.77	2.87	2.97	3.06	3.16	3.25	3.35	3.44	3.45	3.63	3.73	3.83	3.92	4.02	4.11	4.21	4.30	4.40	4.50	4.59	4.69	4.78	4.88	4.97	5.07	5.17	5.26	5.36
S (m)	0.19	0.21	0.14	0.15	0.18	0.20	0.22	0.15	0.17	0.18	0.20	0.22	0.15	0.17	0.18	0.19	0.21	0.13	0.14	0.15	0,17	0.18	0.19	0.21	0.22	0.23	0.12	0.13	0.14	0.16	0.17	0.18	0.19	0.20	0.21	0.22	0.23	0.12	0.13	0.14	0.15	0.16	0.17	0.18	0.19	0.20	0.21	0.22	0.23	0.12
ϑ (DEG)	7.50	7.50	15.00	15.00	15.00	15.00	15.00	15.00	15.00	15.00	15.00	15.00	15.00	15.00	15.00	15.00	15.00	22.50	22.50	22.50	22.50	22.50	22.50	22.50	22.50	22.50	22.50	22.50	22.50	22.50	22.50	22.50	22.50	22.50	22.50	22.50	22.50	22.50	22.50	22.50	22.50	22.50	22.50	22.50	22.50	22.50	22.50	22.50	22.50	22.50

TABLE # PDE.03 (Q = 0.125 M^3/S , D = 450 mm , R = 0.80 m)

H (m)	0.81	0.89	0.97	1.05	1.13	1.22	1.30	1.38	1.46	1.55	1.63	1.71	1.80	1.88	1.97	2.05	2.13	2.22	2.30	2.39	2.48	2.56	2.65	2.73	2.82	2.90	2.99	3.08	3.16	3.25	3.38	3.42	3.51	3.60	3.68	3.77	3.86	3.95	4.03	4.12	4.21	4.29	4.38	4.47	4.56	4.65	4.73	4.82	4.91	5.00
L (m)	1.75	2.00	2.25	2.50	2.75	3.00	3.25	3.50	3.75	4.00	4.25	4.50	4.75	5.00	5.25	5.50	5.75	6.00	6.25	6.50	6.75	7.00	7.25	7.50	7.75	8.00	8.25	8.50	8.75	9.00	9.25	9.50	9.75	10.00	10.25	10.50	10.75	11.00	11.25	11.50	11.75	12.00	12.25	12.50	12.75	13.00	13.25	13.50	13.75	14.00
L1 (m)	1.62	1.85	2.08	2.31	2.54	2.77	3.00	3.23	3.46	3.70	3.93	4.16	4.39	4.62	4.85	5.08	5.31	5.54	5.77	6.00	6.24	6.47	6.70	6.93	7.16	7.39	7.62	7.85	8.08	8.31	8.55	8.78	9.01	9.24	9.47	9.70	9.93	10.16	10.39	10.62	10.86	11.09	11.32	11.55	11.78	12.01	12.24	12.47	12.70	12.93
L2(m)	2.40	2.50	2.50	2.60	2.60	2.70	2.70	2.80	2.80	2.90	2.90	2.90	3.00	3.00	3.10	3.10	3.10	3.20	3.20	3.30	3.30	3.30	3.40	3.40	3.40	3.50	3.50	3 50	3.60	3.60	3.60	3.70	3.70	3.70	3.80	3.80	3.80	3.90	3.90	3.90	4.00	4.00	4.00	4.00	4.10	4.10	4.10	4.20	4.20	4.20
L3(m)	0.60	0.60	0.60	0.60	0.60	0.60	0.90	0.90	0.90	1.20	1.20	1.20	0.90	0.90	0.90	0.90	0.90	0.90	0.90	1.20	1.20	1.20	1.20	1.20	1.20	1.20	1.20	1.50	1.50	1.50	1.50	1.50	1.50	1.50	1.50	1.20	1.20	1.20	1.20	1.20	1.20	1.20	1.20	1.20	1.20	1.2	1.20	1.20	1.20	
H1(m)	0.67	0.76	0.86	0.96	1.05	1.15	1.24	1.40	1.43	1.53	1.63	1.72	1.82	1.91	2.01	2.10	2.20	2.30	2.39	2.49	2.58	2.68	2.77	2.87	2.96	3.06	3.16	3.25	3.35	3.44	3.54	3.63	3.73	3.83	3.92	4.02	4.11	4.21	4.30	4.40	4.50	4.59	4.69	4.78	4.88	4.97	5.07	5.17	5.26	5.36
S (m)	0.14	0.16	0.17	0.19	0.20	0.22	0.19	0.20	0.22	0.19	0.20	0.21	0.14	0.16	0.17	0.18	0.19	0.20	0.21	0.14	0.15	0.16	0.17	0.18	0.19	0.20	0.21	0.14	0.15	0.16	0.17	0.18	0.19	0.20	0.20	0.21	0.13	0.14	0.14	0.15	0.16	0.17	0.18	0.19	0.19	0.20	0.21	0.22	0.22	0.23
ϑ (DEG)	7.50	7.50	7.50	7.50	7.50	7.50	7.50	7.50	7.50	7.50	7.50	7.50	15.00	15.00	15.00	15.00	15.00	15.00	15.00	15.00	15.00	15.00	15.00	15.00	15.00	15.00	15.00	15.00	15.00	15.00	15.00	15.00	15.00	15.00	15.00	22.50	22.50	22.50	22.50	22.50	22.50	22.50	22.50	22.50	22.50	22.50	22.50	22.50	22.50	22.50

TABLE # PDE.04 (Q = 0.150 M^3/S , D = 450 mm , R = 0.80 m)

H (m)	0.73	0.81	0.89	0.97	1 05	1.13	1.20	1.28	1.36	1.45	1.53	1.61	1.69	1.77	1.85	1.94	2.02	2.10	2.18	2.27	2.35	2.43	2.52	2.60	2.68	2.77	2.85	2.94	3.02	3.11	3.19	3 28	3.36	3.45	3.53	3.62	3.70	3.79	3.87	3.96	4.05	4.13	4.22	4.30	4.39	4.48	4.56	4.65	4.73	4.82
L (m)	1.75	2.00	2.25	2.50	2.75	3.00	3.25	3.50	3.75	4.00	4.25	4.50	4.75	5.00	5.25	5.50	5.75	6.00	6.25	6.50	6.75	7.00	7.25	7.50	7.75	8.00	8.25	8.50	8.75	9.00	9.25	9.50	9.75	10.00	10.25	10.50	10.75	11.00	11.25	11.50	11.75	12.00	12.25	12.50	12.75	13.00	13.25	13.50	13.75	14.00
L1(m)	1.62	1.85	2.08	2.31	2.54	2 77	3.00	3.23	3.46	3.70	3.93	4.16	4.39	4.62	4.85	5.08	5.31	5.54	5.77	6.00	6.24	6.47	6.70	6.93	7.16	7.39	7.62	7.85	8.08	8.31	8.55	8.78	9.01	9.24	9.47	9.70	9.93	10.16	10.39	10.62	10.86	11.09	11.32	11.55	11.78	12.01	12.24	12.47	12.70	12.93
L2(m)	2.60	2.70	2.80	2.80	2.90	2.90	3.00	3.10	3.10	3.20	3.20	3.30	3.30	3.40	3.40	3.50	3.50	3.60	3.60	3.70	3.70	3.80	3.80	3.80	3.90	3.90	4.00	4.00	4.00	4.10	4.10	4.20	4.20	4.20	4.30	4.30	4.40	4.40	4.40	4.50	4.50	4.50	4.60	4.60	4.60	4.70	4.70	4.70	4.80	4.80
L3(m)	0.60	0.90	0.90	1.20	1.20	0.90	0.90	0.90	0.90	0.90	1.20	1.20	1.20	1.20	1.20	1.20	1.50	1.50	1.50	1.50	1.50	1.50	1.20	1.20	1.20	1.20	1.20	1.20	1.20	1.20	1.20	1.20	1.50	1.50	1.50	1.50	1.50	1.50	1.50	1.50	1.50	1.50	1.50	1.50	1.50	1.80	1.80	1.80	1.80	1.80
H1(m)	0.67	0.76	0.86	0.96	1.05	1.15	1.24	1.34	1.43	1.53	1.63	1.72	1.82	1.91	2.01	2.10	2.20	2.30	2.39	2.49	2.58	2.68	2.77	2.87	2.97	3.06	3.16	3.25	3.35	3.44	3.54	3.63	3.73	3.83	3.92	4.02	4.11	4.21	4.30	4.40	4.50	4.59	4.69	4.78	4.88	4.97	5.07	5.17	5.26	5.36
S (m)	0.22	0.20	0.22	0.19	0.21	0.15	0.16	0.18	0.19	0.21	0.14	0.16	0.17	0.19	0.20	0.21	0.15	0.16	0.17	0.19	0.20	0.21	0.13	0.14	0.15	0.16	0.18	0.19	0.20	0.21	0.22	0.23	0.24	0.13	0.14	0.15	0.16	0.17	0.18	0.19	0.20	0.21	0.22	0.23	0.24	0.13	0.14	0.14	0.15	0.16
ϑ (DEG)	7.50	7.50	7.50	7.50	7.50	15.00	15.00	15.00	15.00	15.00	15.00	15.00	15.00	15.00	15.00	15.00	15.00	15.00	15.00	15.00	15.00	15.00	22.50	22.50	22.50	22.50	22.50	22.50	22.50	22.50	22.50	22.50	22.50	22.50	22.50	22.50	22.50	22.50	22.50	22.50	22.50	22.50	22.50	22.50	22.50	22.50	22.50	22.50	22.50	22.50

REFERENCE DWGS : For [illegible] & sections see dwg. Nº 11/2/1/01

Scale:	IRRIGATION & DRAINAGE STANDARDS		
Date:	DWG.Nº 11/2/2/02	PIPE DROP TYPE I WITH EARTH OUTLET TRANSITION DIMENSION TABLES Table 01 to 04	
Approved:	Sheet Nº 3 of 10	Rev Nº	

ISLAMIC REPUBLIC OF IRA[illegible]
MINISTRY OF PLAN & [illegible]DJET
TECHNICAL RESEARCH A[illegible]
STANDARD BUREAU

omoorepeyman.ir

TABLE # PDE.05 (Q=0.150M³/S , D= 500 mm , R=0.90 m)

H (m)	0.88	0.96	1.04	1.12	1.21	1.29	1.37	1.45	1.54	1.62	1.71	1.79	1.87	1.96	2.04	2.13	2.21	2.30	2.38	2.47	2.56	2.64	2.73	2.81	2.90	2.99	3.07	3.16	3.25	3.33	3.42	3.51	3.59	3.68	3.77	3.86	3.94	4.03	4.12	4.21	4.29	4.38	4.47	4.56	4.65	4.73	4.82	4.91	5.00	5.09
L (m)	1.75	2.00	2.25	2.50	2.75	3.00	3.25	3.50	3.75	4.00	4.25	4.50	4.75	5.00	5.25	5.50	5.75	6.00	6.25	6.50	6.75	7.00	7.25	7.50	7.75	8.00	8.25	8.50	8.75	9.00	9.25	9.50	9.75	10.00	10.25	10.50	10.75	11.00	11.25	11.50	11.75	12.00	12.25	12.50	12.75	13.00	13.25	13.50	13.75	14.00
L1 (m)	1.62	1.85	2.08	2.31	2.54	2.77	3.00	3.23	3.46	3.70	3.93	4.16	4.39	4.62	4.85	5.08	5.31	5.54	5.77	6.00	6.24	6.47	6.70	6.93	7.16	7.39	7.62	7.85	8.04	8.31	8.55	8.78	9.01	9.24	9.47	9.70	9.93	10.16	10.39	10.62	10.86	11.09	11.32	11.55	11.78	12.01	12.24	12.47	12.70	12.93
L2(m)	2.50	2.60	2.60	2.70	2.70	2.80	2.80	2.90	2.90	2.90	3.00	3.00	3.10	3.10	3.20	3.20	3.20	3.30	3.30	3.30	3.40	3.40	3.40	3.50	3.50	3.50	3.60	3.60	3.60	3.70	3.70	3.70	3.80	3.80	3.80	3.90	3.90	3.90	4.00	4.00	4.00	4.00	4.10	4.10	4.10	4.20	4.20	4.20	4.20	4.30
L3(m)	0.60	0.60	0.60	0.60	0.60	0.60	0.60	0.90	0.90	0.90	0.90	1.20	1.20	1.20	0.90	0.90	0.90	0.90	0.90	0.90	0.90	0.90	1.20	1.20	1.20	1.20	1.20	1.20	1.20	1.20	1.20	1.50	1.50	1.50	1.50	1.50	1.50	1.50	1.50	1.50	1.20	1.20	1.20	1.20	1.20	1.20	1.20	1.20	1.20	1.20
H1(m)	0.67	0.76	0.86	0.96	1.05	1.15	1.24	1.34	1.43	1.53	1.63	1.72	1.82	1.91	2.01	2.10	2.20	2.30	2.39	2.49	2.58	2.68	2.77	2.87	2.97	3.06	3.16	3.25	3.35	3.44	3.54	3.63	3.73	3.83	3.92	4.02	4.11	4.21	4.30	4.40	4.50	4.59	4.69	4.78	4.88	4.97	5.07	5.17	5.26	5.36
S (m)	0.12	0.14	0.15	0.17	0.18	0.19	0.21	0.18	0.19	0.20	0.22	0.19	0.20	0.21	0.14	0.15	0.16	0.17	0.18	0.19	0.20	0.21	0.14	0.15	0.16	0.17	0.18	0.19	0.20	0.21	0.22	0.14	0.15	0.16	0.17	0.18	0.19	0.19	0.20	0.21	0.12	0.13	0.14	0.15	0.15	0.16	0.17	0.18	0.19	0.19
ϐ (DEG)	7.50	7.50	7.50	7.50	7.50	7.50	7.50	7.50	7.50	7.50	7.50	7.50	7.50	7.50	15.00	15.00	15.00	15.00	15.00	15.00	15.00	15.00	15.00	15.00	15.00	15.00	15.00	15.00	15.00	15.00	15.00	15.00	15.00	15.00	15.00	15.00	15.00	15.00	15.00	15.00	22.50	22.50	22.50	22.50	22.50	22.50	22.50	22.50	22.50	22.50

TABLE # PDE.06 (Q=0.175M³/S , D= 500 mm , R=0.90 m)

H (m)	0.81	0.89	0.97	1.05	1.13	1.21	1.29	1.37	1.46	1.54	1.62	1.70	1.78	1.87	1.95	2.03	2.12	2.20	2.28	2.37	2.45	2.54	2.62	2.71	2.79	2.87	2.96	3.04	3.13	3.22	3.30	3.39	3.47	3.56	3.64	3.73	3.82	3.90	3.99	4.08	4.16	4.25	4.33	4.42	4.51	4.60	4.68	4.77	4.86	4.94
L (m)	1.75	2.00	2.25	2.50	2.75	3.00	3.25	3.50	3.75	4.00	4.25	4.50	4.75	5.00	5.25	5.50	5.75	6.00	6.25	6.50	6.75	7.00	7.25	7.50	7.75	8.00	8.25	8.50	8.75	9.00	9.25	9.50	9.75	10.00	10.25	10.50	10.75	11.00	11.25	11.50	11.75	12.00	12.25	12.50	12.75	13.00	13.25	13.50	13.75	14.00
L1 (m)	1.62	1.85	2.08	2.31	2.54	2.77	3.00	3.23	3.46	3.70	3.93	4.16	4.39	4.62	4.85	5.08	5.31	5.54	5.77	6.00	6.24	6.47	6.70	6.93	7.16	7.39	7.62	7.85	8.08	8.31	8.55	8.78	9.01	9.24	9.47	9.70	9.93	10.16	10.39	10.62	10.86	11.09	11.32	11.55	11.78	12.01	12.24	12.47	12.70	12.93
L2(m)	2.70	2.80	2.80	2.90	3.00	3.00	3.10	3.10	3.20	3.20	3.30	3.30	3.40	3.40	3.50	3.50	3.50	3.60	3.60	3.70	3.70	3.80	3.80	3.80	3.90	3.90	4.00	4.00	4.00	4.10	4.10	4.10	4.20	4.20	4.30	4.30	4.40	4.40	4.40	4.50	4.50	4.50	4.60	4.60	4.60	4.70	4.70	4.70	4.70	4.70
L3(m)	0.60	0.60	0.90	0.90	0.90	1.20	1.20	0.90	0.90	0.90	0.90	0.90	0.90	1.20	1.20	1.20	1.20	1.20	1.20	1.20	1.50	1.50	1.50	1.50	1.50	1.50	1.50	1.20	1.20	1.20	1.20	1.20	1.20	1.20	1.20	1.20	1.20	1.20	1.20	1.50	1.50	1.50	1.50	1.50	1.50	1.50	1.50	1.50	1.50	1.50
H1(m)	0.67	0.76	0.86	0.96	1.05	1.15	1.24	1.34	1.43	1.53	1.63	1.72	1.82	1.91	2.01	2.10	2.20	2.30	2.39	2.49	2.58	2.68	2.77	2.87	2.97	3.06	3.16	3.25	3.35	3.44	3.54	3.63	3.73	3.83	3.92	4.02	4.11	4.21	4.30	4.40	4.50	4.59	4.69	4.78	4.88	4.97	5.07	5.17	5.26	5.36
S (m)	0.19	0.21	0.18	0.20	0.22	0.19	0.21	0.14	0.15	0.17	0.18	0.20	0.21	0.14	0.15	0.17	0.18	0.19	0.20	0.22	0.15	0.16	0.17	0.18	0.19	0.20	0.21	0.13	0.14	0.15	0.16	0.17	0.18	0.19	0.20	0.21	0.22	0.23	0.24	0.13	0.14	0.15	0.15	0.16	0.17	0.18	0.19	0.20	0.21	0.22
ϐ (DEG)	7.50	7.50	7.50	7.50	7.50	7.50	7.50	15.00	15.00	15.00	15.00	15.00	15.00	15.00	15.00	15.00	15.00	15.00	15.00	15.00	15.00	15.00	15.00	15.00	15.00	15.00	15.00	22.50	22.50	22.50	22.50	22.50	22.50	22.50	22.50	22.50	22.50	22.50	22.50	22.50	22.50	22.50	22.50	22.50	22.50	22.50	22.50	22.50	22.50	22.50

TABLE # PDE.07 (Q=0.200M³/S , D= 500 mm , R=0.90 m)

H (m)	0.75	0.83	0.91	0.98	1.06	1.14	1.22	1.30	1.38	1.45	1.54	1.62	1.70	1.78	1.86	1.94	2.02	2.10	2.19	2.27	2.35	2.43	2.52	2.60	2.68	2.76	2.85	2.93	3.02	3.10	3.18	3.27	3.35	3.44	3.52	3.61	3.69	3.78	3.86	3.95	4.03	4.12	4.20	4.29	4.37	4.46	4.54	4.63	4.71	4.80
L (m)	1.75	2.00	2.25	2.50	2.75	3.00	3.25	3.50	3.75	4.00	4.25	4.50	4.75	5.00	5.25	5.50	5.75	6.00	6.25	6.50	6.75	7.00	7.25	7.50	7.75	8.00	8.25	8.50	8.75	9.00	9.25	9.50	9.75	10.00	10.25	10.50	10.75	11.00	11.25	11.50	11.75	12.00	12.25	12.50	12.75	13.00	13.25	13.50	13.75	14.00
L1 (m)	1.62	1.85	2.08	2.31	2.54	2.77	3.00	3.23	3.46	3.70	3.93	4.16	4.39	4.62	4.85	5.08	5.31	5.54	5.77	6.00	6.24	6.47	6.70	6.93	7.16	7.39	7.62	7.85	8.08	8.31	8.55	8.78	9.01	9.24	9.47	9.70	9.93	10.16	10.39	10.62	10.86	11.09	11.32	11.55	11.78	12.01	12.24	12.47	12.70	12.93
L2(m)	2.90	3.00	3.00	3.10	3.20	3.20	3.30	3.40	3.40	3.50	3.50	3.60	3.60	3.70	3.70	3.80	3.80	3.90	3.90	4.00	4.00	4.10	4.10	4.20	4.20	4.30	4.30	4.40	4.40	4.40	4.50	4.50	4.60	4.60	4.70	4.70	4.70	4.80	4.80	4.90	4.90	4.90	5.00	5.00	5.00	5.10	5.10	5.10	5.20	5.20
L3(m)	0.90	1.20	1.20	0.90	0.90	0.90	0.90	0.90	1.20	1.20	1.20	1.20	1.20	1.50	1.50	1.50	1.50	1.50	1.20	1.20	1.20	1.20	1.20	1.20	1.20	1.20	1.20	1.50	1.50	1.50	1.50	1.50	1.50	1.50	1.50	1.50	1.50	1.50	1.80	1.80	1.80	1.80	1.80	1.80	1.80	1.80	1.80	1.80	1.80	1.80
H1(m)	0.67	0.76	0.86	0.96	1.05	1.15	1.24	1.34	1.43	1.53	1.63	1.72	1.82	1.91	2.01	2.10	2.20	2.30	2.39	2.49	2.58	2.68	2.77	2.87	2.97	3.06	3.16	3.25	3.35	3.44	3.54	3.63	3.73	3.83	3.92	4.02	4.11	4.21	4.30	4.40	4.50	4.59	4.69	4.78	4.88	4.97	5.07	5.17	5.26	5.36
S (m)	0.21	0.19	0.21	0.15	0.17	0.18	0.20	0.22	0.15	0.17	0.19	0.20	0.22	0.15	0.17	0.18	0.20	0.21	0.13	0.14	0.16	0.17	0.18	0.19	0.21	0.22	0.23	0.21	0.13	0.14	0.16	0.17	0.18	0.19	0.20	0.21	0.22	0.24	0.13	0.14	0.14	0.15	0.17	0.18	0.19	0.20	0.21	0.22	0.23	0.24
ϐ (DEG)	7.50	7.50	7.50	15.00	15.00	15.00	15.00	15.00	15.00	15.00	15.00	15.00	15.00	15.00	15.00	15.00	15.00	15.00	22.50	22.50	22.50	22.50	22.50	22.50	22.50	22.50	22.50	22.50	22.50	22.50	22.50	22.50	22.50	22.50	22.50	22.50	22.50	22.50	22.50	22.50	22.50	22.50	22.50	22.50	22.50	22.50	22.50	22.50	22.50	22.50

TABLE # PDE.08 (Q=0.225M³/S , D= 600 mm , R=1.00 m)

H (m)		0.97	1.06	1.14	1.22	1.30	1.38	1.47	1.55	1.63	1.72	1.80	1.89	1.97	2.05	2.14	2.22	2.31	2.39	2.48	2.56	2.65	2.74	2.82	2.91	2.99	3.08	3.17	3.25	3.34	3.43	3.51	3.60	3.69	3.77	3.86	3.95	4.04	4.12	4.21	4.30	4.39	4.47	4.56	4.65	4.74	4.83	4.91	5.00	5.09
L (m)		2.00	2.25	2.50	2.75	3.00	3.25	3.50	3.75	4.00	4.25	4.50	4.75	5.00	5.25	5.50	5.75	6.00	6.25	6.50	6.75	7.00	7.25	7.50	7.75	8.00	8.25	8.50	8.75	9.00	9.25	9.50	9.75	10.00	10.25	10.50	10.75	11.00	11.25	11.50	11.75	12.00	12.25	12.50	12.75	13.00	13.25	13.50	13.75	14.00
L1(m)		1.85	2.08	2.31	2.54	2.77	3.00	3.23	3.46	3.70	3.93	4.16	4.39	4.62	4.85	5.08	5.31	5.54	5.77	6.00	6.24	6.47	6.70	6.93	7.16	7.39	7.62	7.85	8.08	8.31	8.55	8.78	9.01	9.24	9.47	9.70	9.93	10.16	10.39	10.62	10.86	11.09	11.32	11.55	11.78	12.01	12.24	12.47	12.70	12.93
L2(m)		2.90	2.90	3.00	3.00	3.10	3.10	3.20	3.20	3.30	3.30	3.30	3.40	3.40	3.50	3.50	3.50	3.60	3.60	3.70	3.70	3.70	3.80	3.80	3.80	3.90	3.90	3.90	4.00	4.00	4.00	4.10	4.10	4.10	4.20	4.20	4.20	4.30	4.30	4.30	4.40	4.40	4.40	4.40	4.50	4.50	4.50	4.60	4.60	4.60
L3(m)		0.60	0.60	0.60	0.60	0.60	0.60	0.60	0.90	0.90	0.90	0.90	1.20	1.20	1.20	0.90	0.90	0.90	0.90	0.90	0.90	0.90	0.90	1.20	1.20	1.20	1.20	1.20	1.20	1.20	1.20	1.50	1.50	1.50	1.50	1.50	1.50	1.50	1.50	1.50	1.50	1.20	1.20	1.20	1.20	1.20	1.20	1.20	1.20	1.20
H1(m)		0.76	0.86	0.96	1.05	1.15	1.24	1.34	1.43	1.53	1.63	1.72	1.82	1.91	2.01	2.10	2.20	2.30	2.39	2.49	2.58	2.68	2.77	2.87	2.97	3.06	3.16	3.25	3.35	3.44	3.54	3.63	3.73	3.83	3.92	4.02	4.11	4.21	4.30	4.40	4.50	4.59	4.69	4.78	4.88	4.97	5.07	5.17	5.26	5.36
S (m)		0.13	0.14	0.15	0.17	0.18	0.20	0.21	0.18	0.19	0.21	0.22	0.19	0.20	0.21	0.14	0.15	0.16	0.17	0.18	0.19	0.20	0.21	0.14	0.15	0.16	0.17	0.18	0.19	0.20	0.21	0.14	0.15	0.16	0.17	0.17	0.18	0.19	0.20	0.21	0.22	0.13	0.14	0.15	0.15	0.16	0.17	0.18	0.19	0.19
ϐ (DEG)		7.50	7.50	7.50	7.50	7.50	7.50	7.50	7.50	7.50	7.50	7.50	7.50	7.50	7.50	15.00	15.00	15.00	15.00	15.00	15.00	15.00	15.00	15.00	15.00	15.00	15.00	15.00	15.00	15.00	15.00	15.00	15.00	15.00	15.00	15.00	15.00	15.00	15.00	15.00	15.00	22.50	22.50	22.50	22.50	22.50	22.50	22.50	22.50	22.50

REFERENCE DWGS.: For plan & sections see dwg Nº 11/2/1/01

Scale:	IRRIGATION & DRAINAGE STANDARDS		
Date:	DWG.Nº 11/2/2/03	PIPE DROP TYPE I WITH EARTH OUTLET TRANSITION DIMENSION TABLES Table 05 to 08	ISLAMIC REPUBLIC OF IRAN MINISTRY OF PLAN & BUDJET TECHNICAL RESEARCH AND STANDARD BUREAU
Approved:	Sheet.Nº 4 of 10 Rev.Nº		

omoorepeyman.ir

TABLE # PDE. 09 (Q =0.250M³/S , D= 600 mm , R=1.00 m)

| | | |

TABLE # PDE. 13 (Q=0.350M³/S , D= 700 mm , R=1.10 m)

H (m)	0.86	0.94	1.02	1.10	1.18	1.26	1.34	1.43	1.51	1.59	1.67	1.75	1.84	1.92	2.00	2.09	2.17	2.25	2.34	2.42	2.51	2.59	2.67	2.76	2.84	2.93	3.01	3.10	3.18	3.27	3.35	3.44	3.53	3.61	3.70	3.78	3.87	3.96	4.04	4.13	4.21	4.30	4.39	4.47	4.56	4.65	4.74	4.82	4.91	5.00
L (m)	1.75	2.00	2.25	2.50	2.75	3.00	3.25	3.50	3.75	4.00	4.25	4.50	4.75	5.00	5.25	5.50	5.75	6.00	6.25	6.50	6.75	7.00	7.25	7.50	7.75	8.00	8.25	8.50	8.75	9.00	9.25	9.50	9.75	10.00	10.25	10.50	11.75	11.00	11.25	11.50	11.75	12.00	12.25	12.50	12.75	13.00	13.25	13.50	13.75	14.00
L1 (m)	1.62	1.85	2.08	2.31	2.54	2.77	3.00	3.23	3.46	3.70	3.93	4.16	4.39	4.62	4.85	5.08	5.31	5.54	5.77	6.00	6.24	6.47	6.70	6.93	7.16	7.39	7.62	7.85	8.08	8.31	8.55	8.78	9.01	9.24	9.47	9.70	9.93	10.16	10.39	10.62	10.86	11.09	11.32	11.55	11.78	12.01	12.24	12.47	12.70	12.93
L2(m)	3.30	3.30	3.40	3.40	3.50	3.50	3.60	3.60	3.70	3.70	3.80	3.80	3.90	3.90	4.00	4.00	4.10	4.10	4.20	4.20	4.20	4.30	4.30	4.40	4.40	4.40	4.50	4.50	4.60	4.60	4.60	4.70	4.70	4.70	4.80	4.80	4.80	4.90	4.90	5.00	5.00	5.00	5.10	5.10	5.10	5.10	5.20	5.20	5.20	5.30
L3(m)	0.60	0.60	0.60	0.60	0.60	0.90	0.90	0.90	1.20	1.20	1.20	0.90	0.90	0.90	0.90	0.90	0.90	1.20	1.20	1.20	1.20	1.20	1.20	1.20	1.50	1.50	1.50	1.50	1.50	1.50	1.50	1.50	1.20	1.20	1.20	1.20	1.20	1.20	1.20	1.20	1.20	1.20	1.20	1.20	1.20	1.50	1.50	1.50	1.50	1.50
H1(m)	0.67	0.76	0.86	0.96	1.05	1.15	1.24	1.34	1.43	1.53	1.63	1.72	1.82	1.91	2.01	2.10	2.20	2.30	2.39	2.49	2.58	2.68	2.77	2.87	2.97	3.06	3.16	3.25	3.35	3.44	3.54	3.63	3.73	3.83	3.92	4.02	4.11	4.21	4.30	4.40	4.50	4.59	4.69	4.78	4.88	4.97	5.07	5.17	5.26	2.36
S (m)	0.14	0.16	0.18	0.19	0.21	0.18	0.20	0.21	0.19	0.20	0.21	0.14	0.16	0.17	0.18	0.20	0.21	0.14	0.15	0.16	0.18	0.19	0.20	0.21	0.14	0.15	0.16	0.17	0.18	0.20	0.21	0.22	0.13	0.14	0.15	0.16	0.17	0.18	0.19	0.20	0.21	0.22	0.23	0.24	0.12	0.13	0.14	0.15	0.16	0.17
δ (DEG)	7.50	7.50	7.50	7.50	7.50	7.50	7.50	7.50	7.50	7.50	7.50	15.00	15.00	15.00	15.00	15.00	15.00	15.00	15.00	15.00	15.00	15.00	15.00	15.00	15.00	15.00	15.00	15.00	15.00	15.00	15.00	15.00	22.50	22.50	22.50	22.50	22.50	22.50	22.50	22.50	22.50	22.50	22.50	22.50	22.50	22.50	22.50	22.50	22.50	22.50

TABLE # PDE. 14 (Q=0.375M³/S , D= 700 mm , R=1.10 m)

H (m)	0.83	0.91	0.99	1.07	1.14	1.22	1.30	1.38	1.46	1.55	1.63	1.71	1.79	1.87	1.95	2.04	2.12	2.20	2.29	2.37	2.45	2.54	2.62	2.70	2.79	2.87	2.96	3.04	3.12	3.21	3.29	3.38	3.46	3.55	3.63	3.72	3.80	3.89	3.98	4.06	4.15	4.23	4.32	4.40	4.49	4.58	4.66	4.75	4.84	4.92
L (m)	1.75	2.00	2.25	2.50	2.75	3.00	3.25	3.50	3.75	4.00	4.25	4.50	4.75	5.00	5.25	5.50	5.75	6.00	6.25	6.50	6.75	7.00	7.25	7.50	7.75	8.00	8.25	8.50	8.75	9.00	9.25	9.50	9.75	10.00	10.25	10.50	10.75	11.00	11.25	11.50	11.75	12.00	12.25	12.50	12.75	13.00	13.25	13.50	13.75	14.00
L1 (m)	1.62	1.85	2.08	2.31	2.54	2.77	3.00	3.23	3.46	3.70	3.93	4.16	4.39	4.62	4.85	5.08	5.31	5.54	5.77	6.00	6.24	6.47	6.70	6.93	7.16	7.39	7.62	7.85	8.08	8.31	8.55	8.78	9.01	9.24	9.47	9.70	9.93	10.16	10.39	10.62	10.86	11.09	11.32	11.55	11.78	12.01	12.24	12.47	12.70	12.93
L2(m)	3.40	3.40	3.50	3.50	3.60	3.70	3.70	3.80	3.80	3.90	3.90	4.00	4.00	4.10	4.10	4.20	4.20	4.30	4.30	4.40	4.40	4.50	4.50	4.50	4.60	4.60	4.70	4.70	4.80	4.80	4.80	4.90	4.90	5.00	5.00	5.00	5.10	5.10	5.10	5.20	5.20	5.20	5.30	5.30	5.40	5.40	5.40	5.50	5.50	5.50
L3(m)	0.60	0.60	0.60	0.90	0.90	1.20	1.20	1.20	0.90	0.90	0.90	0.90	0.90	1.20	1.20	1.20	1.20	1.20	1.20	1.20	1.50	1.50	1.50	1.50	1.50	1.50	1.20	1.20	1.20	1.20	1.20	1.20	1.20	1.20	1.20	1.20	1.50	1.50	1.50	1.50	1.50	1.50	1.50	1.50	1.50	1.50	1.50	1.50	1.50	1.50
H1(m)	0.67	0.76	0.86	0.96	1.05	1.15	1.24	1.34	1.43	1.53	1.63	1.72	1.82	1.91	2.01	2.10	2.20	2.30	2.39	2.49	2.58	2.68	2.77	2.87	2.97	3.06	3.16	3.25	3.35	3.44	3.54	3.63	3.73	3.83	3.92	4.02	4.11	4.21	4.30	4.40	4.50	4.59	4.69	4.78	4.88	4.97	5.07	5.17	5.26	5.36
S (m)	0.18	0.19	0.21	0.19	0.21	0.18	0.20	0.22	0.15	0.16	0.18	0.19	0.21	0.14	0.15	0.17	0.18	0.19	0.21	0.22	0.15	0.16	0.18	0.19	0.20	0.21	0.13	0.14	0.15	0.16	0.17	0.18	0.19	0.21	0.22	0.23	0.24	0.12	0.13	0.14	0.15	0.16	0.17	0.18	0.19	0.20	0.21	0.22	0.23	0.24
δ (DEG)	7.50	7.50	7.50	7.50	7.50	7.50	7.50	7.50	15.00	15.00	15.00	15.00	15.00	15.00	15.00	15.00	15.00	15.00	15.00	15.00	15.00	15.00	15.00	15.00	15.00	15.00	22.50	22.50	22.50	22.50	22.50	22.50	22.50	22.50	22.50	22.50	22.50	22.50	22.50	22.50	22.50	22.50	22.50	22.50	22.50	22.50	22.50	22.50	22.50	22.50

TABLE # PDE. 15 (Q=0.375M³/S , D= 800 mm , R=1.20 m)

H (m)									1.65	1.74	1.82	1.91	1.99	2.08	2.16	2.25	2.33	2.42	2.51	2.59	2.68	2.77	2.85	2.94	3.03	3.11	3.20	3.29	3.37	3.46	3.55	3.64	3.72	3.81	3.90	3.99	4.07	4.16	4.25	4.34	4.43	4.52	4.60	4.69	4.78	4.87	4.96	5.05	5.13	5.22
L (m)									3.75	4.00	4.25	4.50	4.75	5.00	5.25	5.50	5.75	6.00	6.25	6.50	6.75	7.00	7.25	7.50	7.75	8.00	8.25	8.50	8.75	9.00	9.25	9.50	9.75	10.00	10.25	10.50	10.75	11.00	11.25	11.50	11.75	12.00	12.25	12.50	12.75	13.00	13.25	13.50	13.75	14.00
L1 (m)									3.46	3.70	3.93	4.16	4.39	4.62	4.85	5.08	5.31	5.54	5.77	6.00	6.24	6.47	6.70	6.93	7.16	7.39	7.62	7.85	8.08	8.31	8.55	8.78	9.01	9.24	9.47	9.70	9.93	10.16	10.39	10.62	10.86	11.09	11.32	11.55	11.78	12.01	12.24	12.47	12.70	12.93
L2(m)									3.60	3.60	3.70	3.70	3.70	3.80	3.80	3.90	3.90	3.90	4.00	4.00	4.00	4.10	4.10	4.10	4.20	4.20	4.20	4.30	4.30	4.30	4.30	4.40	4.40	4.40	4.50	4.50	4.50	4.50	4.60	4.60	4.60	4.70	4.70	4.70	4.70	4.80	4.80	4.80	4.80	4.90
L3(m)									0.60	0.60	0.60	0.60	0.60	0.60	0.60	0.60	0.60	0.60	0.90	0.90	0.90	0.90	1.20	1.20	1.20	1.20	1.50	0.90	0.90	0.90	0.90	0.90	0.90	0.90	0.90	0.90	1.20	1.20	1.20	1.20	1.20	1.20	1.20	1.20	1.20	1.20	1.20	1.50	1.50	1.50
H1(m)									1.43	1.53	1.63	1.72	1.82	1.91	2.01	2.10	2.20	2.30	2.39	2.49	2.58	2.68	2.77	2.87	2.97	3.06	3.16	3.25	3.35	3.44	3.54	3.63	3.73	3.83	3.92	4.02	4.11	4.21	4.30	4.40	4.50	4.59	4.69	4.78	4.88	4.97	5.07	5.17	5.26	5.36
S (m)									0.12	0.13	0.14	0.15	0.16	0.18	0.19	0.20	0.21	0.22	0.19	0.20	0.20	0.21	0.18	0.19	0.20	0.21	0.18	0.15	0.15	0.16	0.17	0.18	0.19	0.20	0.20	0.21	0.14	0.15	0.16	0.16	0.17	0.18	0.19	0.19	0.20	0.21	0.21	0.14	0.15	0.16
δ (DEG)									7.50	7.50	7.50	7.50	7.50	7.50	7.50	7.50	7.50	7.50	7.50	7.50	7.50	7.50	7.50	7.50	7.50	7.50	7.50	15.00	15.00	15.00	15.00	15.00	15.00	15.00	15.00	15.00	15.00	15.00	15.00	15.00	15.00	15.00	15.00	15.00	15.00	15.00	15.00	15.00	15.00	15.00

TABLE # PDE. 16 (Q=0.400M³/S , D= 800 mm , R=1.20 m)

H (m)							1.45	1.53	1.62	1.70	1.79	1.87	1.95	2.04	2.12	2.21	2.29	2.38	2.46	2.55	2.64	2.72	2.81	2.89	2.98	3.07	3.15	3.24	3.33	3.41	3.50	3.59	3.67	3.76	3.85	3.94	4.02	4.11	4.20	4.29	4.37	4.46	4.55	4.64	4.72	4.81	4.90	4.99	5.08	5.16
L (m)							3.25	3.50	3.75	4.00	4.25	4.50	4.75	5.00	5.25	5.50	5.75	6.00	6.25	6.50	6.75	7.00	7.25	7.50	7.75	8.00	8.25	8.50	8.75	9.00	9.25	9.50	9.75	10.00	10.25	10.50	10.75	11.00	11.25	11.50	11.75	12.00	12.25	12.50	12.75	13.00	13.25	13.50	13.75	14.00
L1(m)							3.00	3.23	3.46	3.70	3.93	4.16	4.39	4.62	4.85	5.08	5.31	5.54	5.77	6.00	6.24	6.47	6.70	6.93	7.16	7.39	7.62	7.85	8.08	8.31	8.55	8.78	9.01	9.24	9.47	9.70	9.93	10.16	10.39	10.62	10.86	11.09	11.32	11.55	11.78	12.01	12.24	12.47	12.70	12.93
L2(m)							3.60	3.70	3.70	3.70	3.80	3.80	3.90	3.90	3.90	4.00	4.00	4.10	4.10	4.10	4.20	4.20	4.20	4.30	4.30	4.30	4.40	4.40	4.40	4.50	4.50	4.50	4.60	4.60	4.60	4.70	4.70	4.70	4.80	4.80	4.80	4.80	4.90	4.90	4.90	5.00	5.00	5.00	5.00	5.10
L3(m)							0.60	0.60	0.60	0.60	0.60	0.60	0.60	0.60	0.90	0.90	0.90	0.90	1.20	1.20	1.20	1.20	0.90	0.90	0.90	0.90	0.90	0.90	0.90	0.90	1.20	1.20	1.20	1.20	1.20	1.20	1.20	1.20	1.20	1.20	1.50	1.50	1.50	1.50	1.50	1.50	1.50	1.50	1.50	1.50
H1(m)							1.24	1.34	1.43	1.53	1.63	1.72	1.82	1.91	2.01	2.10	2.20	2.30	2.39	2.49	2.58	2.68	2.77	2.87	2.97	3.06	3.16	3.25	3.35	3.44	3.54	3.63	3.73	3.83	3.92	4.02	4.11	4.21	4.30	4.40	4.50	4.59	4.69	4.78	4.88	4.97	5.07	5.17	5.26	5.36
S (m)							0.13	0.14	0.16	0.17	0.18	0.19	0.20	0.21	0.19	0.20	0.21	0.22	0.19	0.20	0.21	0.22	0.15	0.16	0.16	0.17	0.18	0.19	0.20	0.21	0.14	0.15	0.16	0.17	0.17	0.18	0.19	0.20	0.21	0.22	0.14	0.15	0.16	0.17	0.18	0.18	0.19	0.20	0.21	0.22
δ (DEG)							7.50	7.50	7.50	7.50	7.50	7.50	7.50	7.50	7.50	7.50	7.50	7.50	7.50	7.50	7.50	7.50	15.00	15.00	15.00	15.00	15.00	15.00	15.00	15.00	15.00	15.00	15.00	15.00	15.00	15.00	15.00	15.00	15.00	15.00	15.00	15.00	15.00	15.00	15.00	15.00	15.00	15.00	15.00	15.00

REFERENCE DWGS: For plan & section see dwg Nº 11/2/1/01

Scale:	IRRIGATION & DRAINAGE STANDARDS		
Date:	DWG Nº 11/2/2/05	PIPE DROP TYPE I WITH EARTH OUTLET TRANSITION DIMENSION TABLES Table 13 to 16	ISLAMIC REPUBLIC OF IRAN MINISTRY OF PLAN & BUDJET TECHNICAL RESEARCH AND STANDARD BUREAU
Approved:	Sheet.Nº 6 of 10 Rev.Nº.		

@omoorepeyman.ir

TABLE # PDE. 17 (Q =0.425M³/S , D= 800 mm , R= 1.20 m)

| | | |

TABLE # PDE. 21 (Q=0.500M³/S , D= 900 mm , R= 1.20 m)

H (m)	0.85	0.93	1.00	1.08	1.16	1.24	1.32	1.40	1.48	1.56	1.64	1.73	1.81	1.89	1.97	2.05	2.14	2.22	2.30	2.39	2.47	2.55	2.64	2.72	2.80	2.89	2.97	3.06	3.14	3.22	3.31	3.39	3.48	3.56	3.65	3.73	3.82	3.90	3.99	4.08	4.16	4.25	4.33	4.42	4.50	4.59	4.68	4.76	4.85	4.94
L (m)	1.75	2.00	2.25	2.50	2.75	3.00	3.25	3.50	3.75	4.00	4.25	4.50	4.75	5.00	5.25	5.50	5.75	6.00	6.25	6.50	6.75	7.00	7.25	7.50	7.75	8.00	8.25	8.50	8.75	9.00	9.25	9.50	9.75	10.00	10.25	10.50	10.75	11.00	11.25	11.50	11.75	12.00	12.25	12.50	12.75	13.00	13.25	13.50	13.75	14.00
L1 (m)	1.62	1.85	2.08	2.31	2.54	2.77	3.00	3.23	3.46	3.70	3.93	4.16	4.39	4.62	4.85	5.08	5.31	5.54	5.77	6.00	6.24	6.47	6.70	6.93	7.16	7.39	7.62	7.85	8.08	8.31	8.55	8.78	9.01	9.24	9.47	9.70	9.93	10.16	10.39	10.62	10.86	11.09	11.32	11.55	11.78	12.01	12.24	12.47	12.70	12.93
L2(m)	3.60	3.70	3.80	3.80	3.90	4.00	4.00	4.10	4.10	4.20	4.20	4.30	4.30	4.40	4.40	4.50	4.50	4.60	4.60	4.70	4.70	4.80	4.80	4.80	4.90	4.90	5.00	5.00	5.10	5.10	5.10	5.20	5.20	5.30	5.30	5.30	5.40	5.40	5.40	5.50	5.50	5.60	5.60	5.60	5.70	5.70	5.70	5.80	5.80	5.80
L3(m)	0.60	0.60	0.60	0.60	0.90	0.90	1.20	1.20	1.20	0.90	0.90	0.90	0.90	0.90	0.90	1.20	1.20	1.20	1.20	1.20	1.20	1.50	1.50	1.50	1.50	1.50	1.50	1.20	1.20	1.20	1.20	1.20	1.20	1.20	1.20	1.20	1.20	1.20	1.50	1.50	1.50	1.50	1.50	1.50	1.50	1.50	1.50	1.50	1.50	1.50
H1(m)	0.67	0.76	0.86	0.96	1.05	1.15	1.24	1.34	1.43	1.53	1.63	1.72	1.82	1.91	2.01	2.10	2.20	2.30	2.39	2.49	2.58	2.68	2.77	2.87	2.97	3.06	3.16	3.25	3.35	3.44	3.54	3.63	3.73	3.83	3.92	4.02	4.11	4.21	4.30	4.40	4.50	4.59	4.69	4.78	4.88	4.97	5.07	5.17	5.26	5.36
S (m)	0.16	0.18	0.20	0.21	0.19	0.21	0.18	0.20	0.21	0.15	0.16	0.18	0.19	0.20	0.22	0.15	0.16	0.18	0.19	0.20	0.22	0.15	0.16	0.17	0.18	0.20	0.21	0.12	0.14	0.15	0.16	0.17	0.18	0.19	0.20	0.21	0.22	0.23	0.12	0.13	0.14	0.15	0.16	0.17	0.18	0.19	0.20	0.21	0.22	0.23
ϑ (DEG)	7.50	7.50	7.50	7.50	7.50	7.50	7.50	7.50	7.50	15.00	15.00	15.00	15.00	15.00	15.00	15.00	15.00	15.00	15.00	15.00	15.00	15.00	15.00	15.00	15.00	15.00	15.00	22.50	22.50	22.50	22.50	22.50	22.50	22.50	22.50	22.50	22.50	22.50	22.50	22.50	22.50	22.50	22.50	22.50	22.50	22.50	22.50	22.50	22.50	22.50

TABLE # PDE. 22 (Q=0.500M³/S , D= 900 mm , R=1.30 m)

H (m)										1.74	1.83	1.91	2.00	2.08	2.17	2.25	2.34	2.42	2.51	2.59	2.68	2.77	2.85	2.94	3.03	3.11	3.20	3.29	3.37	3.46	3.55	3.63	3.72	3.81	3.90	3.98	4.07	4.16	4.25	4.33	4.42	4.51	4.60	4.68	4.77	4.86	4.95	5.04	5.13	5.21
L (m)										4.00	4.25	4.50	4.75	5.00	5.25	5.50	5.75	6.00	6.25	6.50	6.75	7.00	7.25	7.50	7.75	8.00	8.25	8.50	8.75	9.00	9.25	9.50	9.75	10.00	10.25	10.50	10.75	11.00	11.25	11.50	11.75	12.00	12.25	12.50	12.75	13.00	13.25	13.50	13.75	14.00
L1 (m)										3.70	3.93	4.16	4.39	4.62	4.85	5.08	5.31	5.54	5.77	6.00	6.24	6.47	6.70	6.93	7.16	7.39	7.62	7.85	8.08	8.31	8.55	8.78	9.01	9.24	9.47	9.70	9.93	10.16	10.39	10.62	10.86	11.09	11.32	11.55	11.78	12.01	12.24	12.47	12.70	12.93
L2(m)										4.00	4.00	4.00	4.10	4.10	4.20	4.20	4.20	4.30	4.30	4.30	4.40	4.40	4.40	4.50	4.50	4.50	4.60	4.60	4.60	4.70	4.70	4.70	4.80	4.80	4.80	4.90	4.90	4.90	4.90	5.00	5.00	5.00	5.10	5.10	5.10	5.10	5.20	5.20	5.20	5.20
L3(m)										0.60	0.60	0.60	0.60	0.60	0.60	0.60	0.60	0.60	0.90	0.90	0.90	0.90	1.20	1.20	1.20	1.20	0.90	0.90	0.90	0.90	0.90	0.90	0.90	0.90	0.90	0.90	1.20	1.20	1.20	1.20	1.20	1.20	1.20	1.20	1.20	1.20	1.50	1.50	1.50	1.50
H1(m)										1.53	1.63	1.72	1.82	1.91	2.01	2.10	2.20	2.30	2.39	2.49	2.58	2.68	2.77	2.87	2.97	3.06	3.16	3.25	3.35	3.44	3.54	3.63	3.73	3.83	3.92	4.02	4.11	4.21	4.30	4.40	4.50	4.59	4.69	4.78	4.88	4.97	5.07	5.17	5.26	5.36
S (m)										0.13	0.14	0.15	0.16	0.17	0.18	0.19	0.20	0.21	0.19	0.20	0.21	0.22	0.19	0.19	0.20	0.21	0.14	0.15	0.16	0.17	0.17	0.18	0.19	0.20	0.21	0.22	0.15	0.15	0.16	0.17	0.18	0.19	0.19	0.20	0.21	0.22	0.14	0.15	0.16	0.17
ϑ (DEG)										7.50	7.50	7.50	7.50	7.50	7.50	7.50	7.50	7.50	7.50	7.50	7.50	7.50	7.50	7.50	7.50	7.50	15.00	15.00	15.00	15.00	15.00	15.00	15.00	15.00	15.00	15.00	15.00	15.00	15.00	15.00	15.00	15.00	15.00	15.00	15.00	15.00	15.00	15.00	15.00	15.00

TABLE # PDE. 23 (Q=0.525M³/S , D= 900 mm , R=1.30 m)

H (m)								1.55	1.63	1.71	1.80	1.88	1.97	2.05	2.14	2.22	2.31	2.39	2.48	2.56	2.65	2.73	2.82	2.90	2.99	3.08	3.16	3.25	3.33	3.42	3.51	3.59	3.68	3.77	3.85	3.94	4.03	4.12	4.20	4.29	4.38	4.47	4.55	4.64	4.73	4.82	4.90	4.99	5.08	5.17
L (m)								3.50	3.75	4.00	4.25	4.50	4.75	5.00	5.25	5.50	5.75	6.00	6.25	6.50	6.75	7.00	7.25	7.50	7.75	8.00	8.25	8.50	8.75	9.00	9.25	9.50	9.75	10.00	10.25	10.50	10.75	11.00	11.25	11.50	11.75	12.00	12.25	12.50	12.75	13.00	13.25	13.50	13.75	14.00
L1 (m)								3.23	3.46	3.70	3.93	4.16	4.39	4.62	4.85	5.08	5.31	5.54	5.77	6.00	6.24	6.47	6.70	6.93	7.16	7.39	7.62	7.85	8.08	8.31	8.55	8.78	9.01	9.24	9.47	9.70	9.93	10.16	10.39	10.62	10.86	11.09	11.32	11.55	11.78	12.01	12.24	12.47	12.70	12.93
L2(m)								4.00	4.00	4.00	4.10	4.10	4.20	4.20	4.30	4.30	4.30	4.40	4.40	4.40	4.50	4.50	4.60	4.60	4.60	4.70	4.70	4.70	4.80	4.80	4.80	4.90	4.90	4.90	5.00	5.00	5.00	5.10	5.10	5.10	5.10	5.20	5.20	5.20	5.30	5.30	5.30	5.30	5.40	5.40
L3(m)								0.60	0.60	0.60	0.60	0.60	0.60	0.60	0.60	0.90	0.90	0.90	0.90	1.20	1.20	1.20	1.50	0.90	0.90	0.90	0.90	0.90	0.90	0.90	1.20	1.20	1.20	1.20	1.20	1.20	1.20	1.20	1.20	1.50	1.50	1.50	1.50	1.50	1.50	1.50	1.50	1.50	1.50	1.50
H1(m)								1.34	1.43	1.53	1.63	1.72	1.82	1.91	2.01	2.10	2.20	2.30	2.39	2.49	2.58	2.68	2.77	2.87	2.97	3.06	3.16	3.25	3.35	3.44	3.54	3.63	3.73	3.83	3.92	4.02	4.11	4.21	4.30	4.40	4.50	4.59	4.69	4.78	4.88	4.97	5.07	5.17	5.26	5.36
S (m)								0.13	0.14	0.16	0.17	0.18	0.19	0.20	0.22	0.19	0.20	0.21	0.22	0.19	0.20	0.21	0.18	0.15	0.16	0.17	0.18	0.19	0.20	0.21	0.21	0.14	0.15	0.16	0.17	0.18	0.19	0.20	0.20	0.21	0.14	0.15	0.16	0.17	0.17	0.18	0.19	0.20	0.21	0.21
ϑ (DEG)								7.50	7.50	7.50	7.50	7.50	7.50	7.50	7.50	7.50	7.50	7.50	7.50	7.50	7.50	7.50	7.50	15.00	15.00	15.00	15.00	15.00	15.00	15.00	15.00	15.00	15.00	15.00	15.00	15.00	15.00	15.00	15.00	15.00	15.00	15.00	15.00	15.00	15.00	15.00	15.00	15.00	15.00	15.00

TABLE # PDE. 24 (Q=0.550M³/S , D= 900 mm , R=1.30 m)

H (m)							1.35	1.44	1.52	1.60	1.69	1.77	1.85	1.94	2.02	2.10	2.19	2.27	2.36	2.44	2.53	2.61	2.70	2.78	2.87	2.95	3.04	3.13	3.21	3.30	3.38	3.47	3.56	3.64	3.73	3.81	3.90	3.99	4.07	4.16	4.25	4.34	4.42	4.51	4.60	4.68	4.77	4.86	4.95	5.03	5.12
L (m)							3.00	3.25	3.50	3.75	4.00	4.25	4.50	4.75	5.00	5.25	5.50	5.75	6.00	6.25	6.50	6.75	7.00	7.25	7.50	7.75	8.00	8.25	8.50	8.75	9.00	9.25	9.50	9.75	10.00	10.25	10.50	10.75	11.00	11.25	11.50	11.75	12.00	12.25	12.50	12.75	13.00	13.25	13.50	13.75	14.00
L1(m)							2.77	3.00	3.23	3.46	3.70	3.93	4.16	4.39	4.62	4.85	5.08	5.31	5.54	5.77	6.00	6.24	6.47	6.70	6.93	7.16	7.39	7.62	7.85	8.08	8.31	8.55	8.78	9.01	9.24	9.47	9.70	9.93	10.16	10.39	10.62	10.86	11.09	11.32	11.55	11.78	12.01	12.24	12.47	12.70	12.93
L2(m)							3.90	4.00	4.00	4.10	4.10	4.20	4.20	4.30	4.30	4.40	4.40	4.40	4.50	4.50	4.60	4.60	4.60	4.70	4.70	4.70	4.80	4.80	4.90	4.90	4.90	5.00	5.00	5.00	5.10	5.10	5.10	5.20	5.20	5.20	5.30	5.30	5.30	5.30	5.40	5.40	5.40	5.50	5.50	5.50	5.60
L3(m)							0.60	0.60	0.60	0.60	0.60	0.60	0.60	0.90	0.90	0.90	0.90	0.90	0.90	0.90	0.90	0.90	0.90	0.90	0.90	0.90	0.90	0.90	1.20	1.20	1.20	1.20	1.20	1.20	1.20	1.20	1.50	1.50	1.50	1.50	1.50	1.50	1.50	1.50	1.50	1.20	1.20	1.20	1.20	1.20	1.20
H1(m)							1.15	1.24	1.34	1.43	1.53	1.63	1.72	1.82	1.91	2.01	2.10	2.20	2.30	2.39	2.49	2.58	2.68	2.77	2.87	2.97	3.06	3.16	3.25	3.35	3.44	3.54	3.63	3.73	3.13	3.92	4.02	4.11	4.21	4.30	4.40	4.50	4.59	4.69	4.78	4.88	4.97	5.07	5.17	5.26	5.36
S (m)							0.13	0.15	0.16	0.17	0.18	0.20	0.21	0.18	0.19	0.21	0.22	0.19	0.20	0.21	0.14	0.15	0.16	0.17	0.18	0.19	0.20	0.21	0.14	0.15	0.16	0.17	0.18	0.19	0.20	0.21	0.14	0.15	0.16	0.17	0.18	0.18	0.19	0.20	0.21	0.12	0.13	0.14	0.15	0.16	0.17
ϑ (DEG)							7.50	7.50	7.50	7.50	7.50	7.50	7.50	7.50	7.50	7.50	7.50	7.50	7.50	7.50	15.00	15.00	15.00	15.00	15.00	15.00	15.00	15.00	15.00	15.00	15.00	15.00	15.00	15.00	15.00	15.00	15.00	15.00	15.00	15.00	15.00	15.00	15.00	15.00	15.00	15.00	15.00	22.50	22.50	22.50	22.50

REFERENCE DWGS: For plan & section see dwg № 11/2/1/01

Scale:	IRRIGATION & DRAINAGE STANDARDS		
Date:	DWG. № 11/2/2/07	PIPE DROP TYPE I WITH EARTH OUTLET TRANSITION DIMENSION TABLES Table 21 to 24	
Approved:	Sheet № 8 of 10	Rev. №	

ISLAMIC REPUBLIC OF IRAN
MINISTRY OF PLAN & BUDJET
TECHNICAL RESEARCH AND STANDARD BUREAU

@omoorepeyman.ir

TABLE # PDE. 25 (Q=0.575M³/S , D= 900 mm , R=1.30 m)

| | | |

TABLE # P DE. 29 (Q =0.625 M^3/S , D= 1000 mm , R=1.40 m)

| | | |

STRUCTURE'S DESCRIPTION

Rectangular Inclined Drop (R.I.Drop) in a rectangular shaped structure with constant width that conveys water from a higher elevation to a lower elevation.

STRUCTURE COMPONENTS

Rectangular Inclined Drop consists of the following hydraulic elements:

- Inlet
- Inclined Channel
- Stilling Pool
- Outlet, and
- Downstream Transition

APPLICATION

a. The R.I.Drop could be used where the drop in elevation is with in the range of 1.00 to 4.00 meters

b. The inlet of this structure may serve as a control to regulate the water depth in the upstream canal.

c. The inlet and outlet can be adapted to either an earth or a lined water way.

d. The inlet can be incorporated either with a control notch or with a check.

How to fit a R.I.Drop with the design condition

For fitting a R.I.Drop with the design condition, proceed with the following steps:

1. Collect the hydraulic properties of the canal at inlet and outlet of structure.

   let:

   b = Bottom width of the canal (m.)
   m = Side slope of the canal
   Y = Depth of flow (m.)
   S = Canal bottom slope
   n = Manning's roughness coefficient
   Q = Discharge (m^3/s)
   V = Velocity (m/s)
   h_V = Velocity head = $V^2/2g$ (m.)

2. Read the elevation of points A and D from the profile sheets.

   let:

   El.A = Elevation of point A.
   El.D = Elevation of point D.
   $El.A_W$ = Elevation of the normal water surface at point A.
   $El.D_W$ = Elevation of the normal water surface at point D.
   $El.A_E$ = Elevation of the energy gradient at point A.
   $El.D_E$ = Elevation of the energy gradient at point D.

3. From the " Standard Dimension Table", Dwg. No.11/1/2/02, for a given discharge, select the width of the R.I.Drop as well as the other dimensions listed on the table.

4. Decide whether to use check or control notch at the inlet.

   Recommendation

   If the amount of flow changes very often and it is required that the upstream canal water depth being controled select control notch.

   Control notch is designed to control upstream canal water depth and velocity for flow ranges between design flow and to about 0.2 of design flow.

   If the changes of flow is not very often check could be used.

5. If the control notch is selected, for calculating its dimensions, follow the steps presented on Dwg.No.12/5/2/01 and then proceed with the following steps.

6. Calculate the energy gradient at point A.

   $El.A_E = El.A + Y + h_V$

7. Calculate the energy gradient at point D using reduced n value. This reduced n should be 0.8 times the assumed design n for the canal. These smaller values of n are used as a factor of safety against possible lower canal water elevations than indicated using the rougher n value.

   $El.D_E = El.D + Y' + h'_V$

   Where Y' represents the depth of water at point D, using reduced n and h'_V which represents velocity head at the downstream when the depth of water is Y'.

8. Determine the drop value (H).

9. By knowing Q and H values and using the tables provided on Dwgs.No.11/1/2/01 and 11/1/2/02 the required structure numbers and corresponding dimensions can be selected.

10. The elevation of B and C could be calculated as follows:

    $El.C = El.D_E - (Y_2 + h_{V_2})$

    $El.B = El.C + L_3/2$

    If El.B is higher than El.A, select another structure to satisfy the condition.

11. All the structural data could be optained from the dimension tables and the reinforcement information could be optained by H_4 value of Dwgs. No. 11/1/3/01 to 11/1/3/03.

    Lists of reinforcement are shown on Dwgs.No. 11/1/3/04 through 11/1/3/27 indicated by structure numbers.

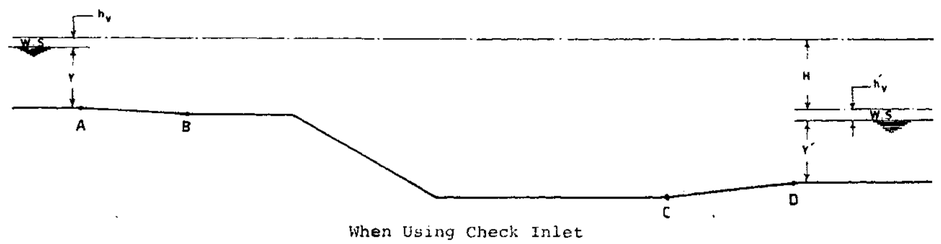

When Using Check Inlet

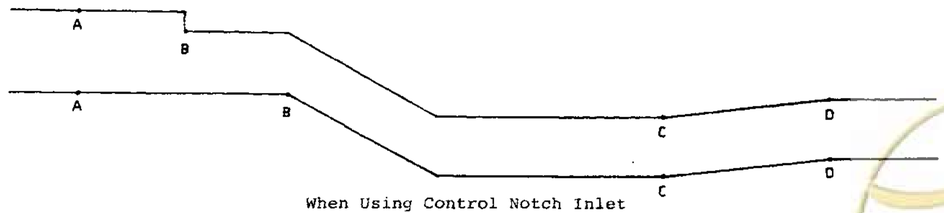

When Using Control Notch Inlet

Example

1&2. The following information is provided for the selection of a proper Rectangular Inclined Drop.

The hydraulic properties of upstream and downstream of the structures are the same.

b = 0.8 m.	Q = 1.2 m^3/s
m = 1.5:1	Y = 0.617 m.
s = 0.001	V = 1.13 m/s
n = 0.014	h_V = 0.065 m.
El.A = 102.18 m.	El.B = 99.78 m.

3. From the Standard Dimension Table: B = 1.85 m.

4. It is decided to use check control at the inlet.

6. $El.A_E = 102.18 + 0.617 + 0.065 = 102.86$

7. $n' = 0.8 \times 0.14 = 0.011$

   For detailed calculation of water depth, when reduced values of n i.e.(n') is used, the reader is referred to P.B.O publication No. 104.

   Y' = 0.549 V' = 1.33 h'_V = 0.093

   $El.D_E = 99.78 + 0.549 + 0.093 = 100.42$

8. H = 102.86 - 100.42 = 2.44

9. Use structure # 1200 - 250

10. $Y_2 + h_{V_2} = 1.027$

    El.C = 100.42 - 1.027 = 99.39 Take 99.40

    $L_3 = 5.40$

    $El.B = 00.40 + \frac{5.40}{2} = 102.10$

All the structural dimensions could be extracted from the table by using structure # 1200 -250.

REFERENCE DWGS:

Scale:	IRRIGATION & DRAINAGE STANDARDS	
Date:	DWG № 11/1/0/01	RECTANGULAR INCLINED DROP DESIGN PROCEDURE AND EXAMPLE
Approved:	Sheet № 1 of32 Rev. №	

ISLAMIC REPUBLIC OF IRAN
MINISTRY OF PLAN & BUDGET
TECHNICAL RESEARCH AND STANDARD BUREAU

omoorepeyman.ir

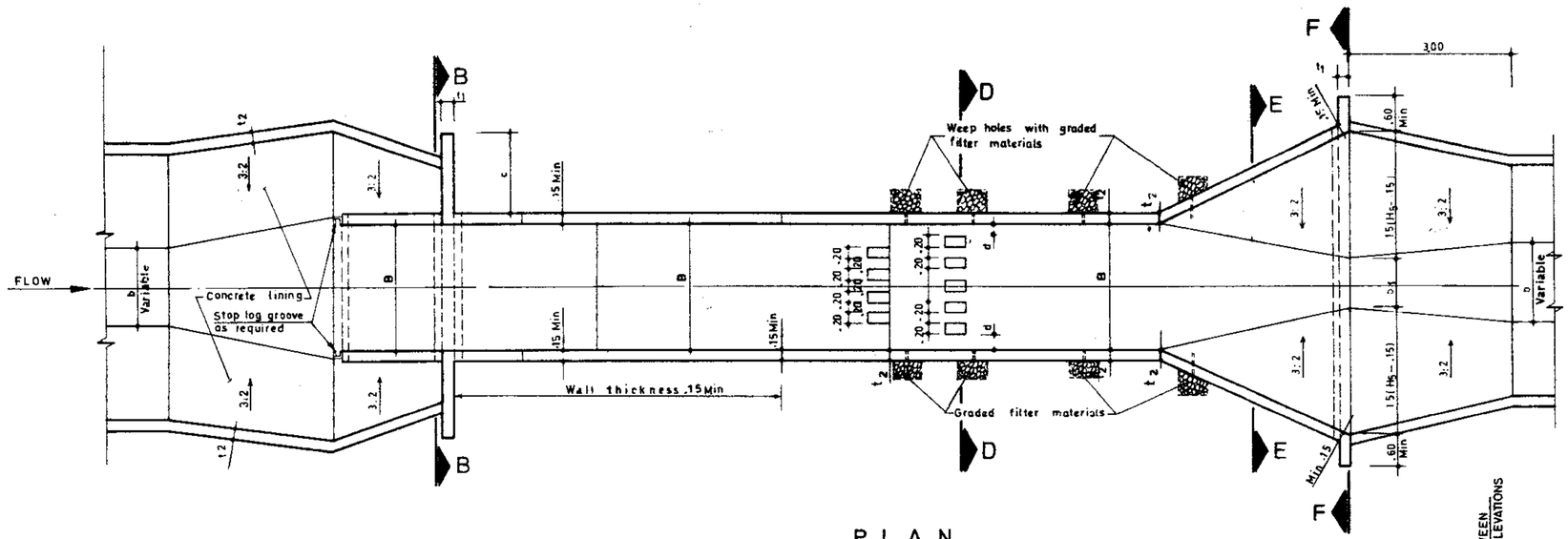

PLAN

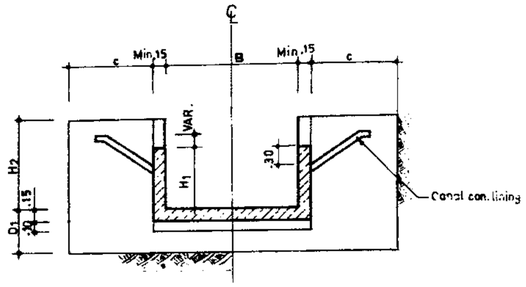

SECTION B-B
U/S HEAD WALL

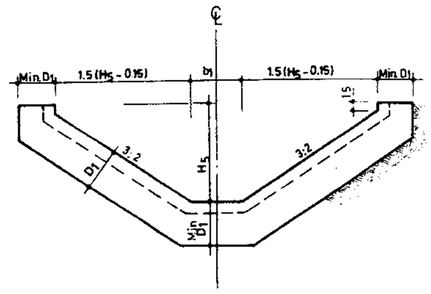

SECTION F-F
D/S HEAD WALL

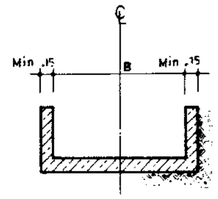

SECTION C-C

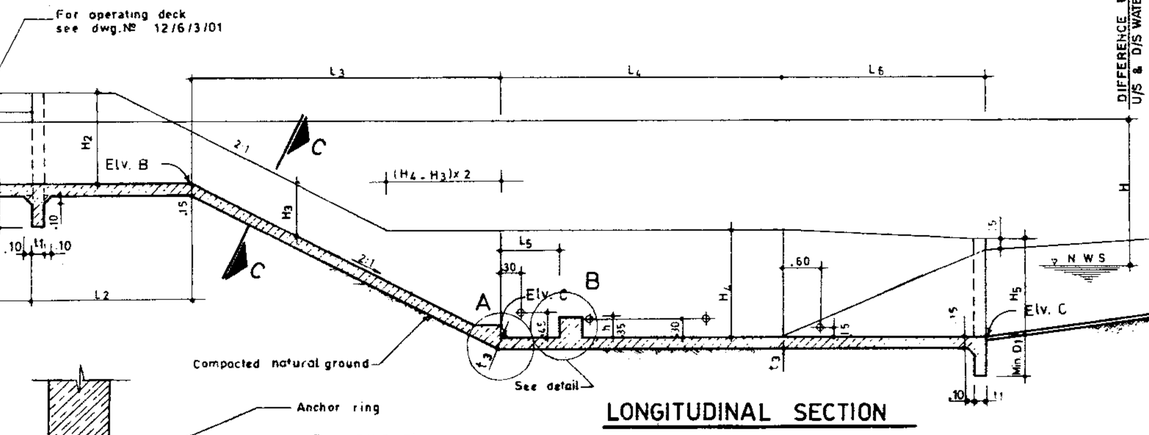

LONGITUDINAL SECTION

DETAIL B

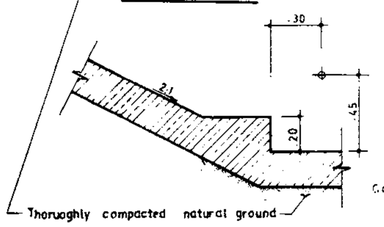

DETAIL A

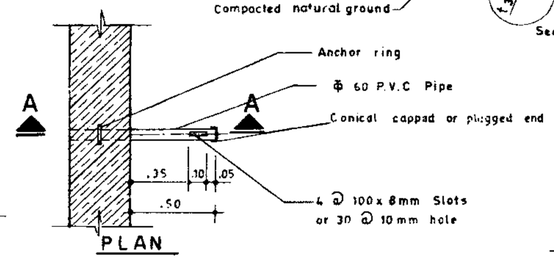

PLAN

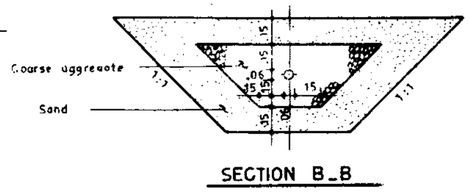

SECTION B-B

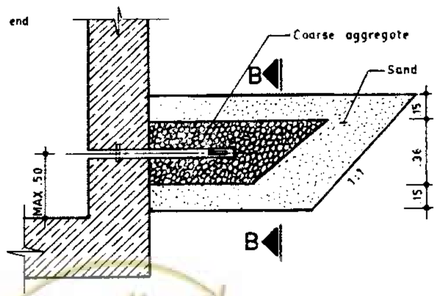

SECTION A-A

DETIAL C

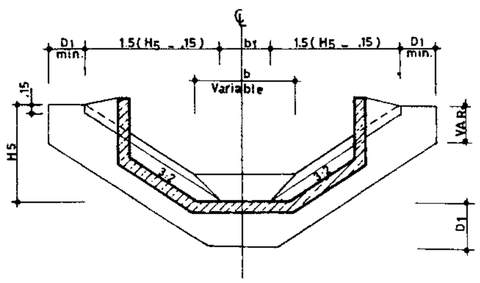

SECTION E-E

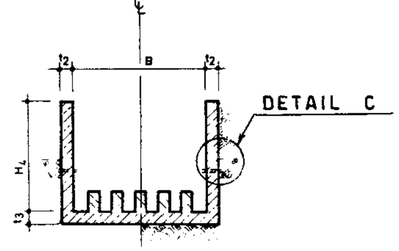

SECTION D-D

DIFFERENCE BETWEEN U/S & D/S WATER ELEVATIONS

REFERENCE DWGS: For dimen... tables see dwgs. № 11/1/2/01 & 11/1/2/02
For reinfor...ment see dwgs. № 11/1/3/01 TO 11/1/3/03
For general ...es see dwgs. № 20/2/1/01 TO 20/2/1/03

Scale: N.T.S	IRRIGATION & DRAINAGE STANDARDS		
Date:	DWG.№ 11/1/1/01		RECTANGULAR INCLINED DROP PLAN & SECTION
Approved	Sheet № 2 of 32	Rev №	

ISLAMIC REPUBLIC OF IRAN
MINISTRY OF PLAN & BUD...
TECHNICAL RESEARCH AND STANDARD BUREAU

@omoorepeyman.ir

STR.	Q m^3/s	H max. m.	H_4 m.	H_5 m.	L_2 m.	L_3 m.	L_4 m.	L_5 m.	Y_2+hv_2 m.	t_2 m.	t_3 m.	h m.	R.B.② Kg	Conc.③ m^3	Gate m.	F.W.④ m^2
200 _ 100	0.20	1.00	0.80	0.80	1.15	2.05	1.80	0.30	0.456	0.15	0.18	0.20	383.64	4.12	1.00x0.35	36.69
200 _ 150	0.20	1.50	0.85	0.85	1.15	3.20	1.95	0.35	0.497	0.15	0.18	0.20	429.16	4.76	〃	41.01
200 _ 200	0.20	2.00	0.90	0.90	1.20	4.30	2.10	0.40	0.529	0.15	0.18	0.20	478.46	5.40	〃	45.46
200 _ 250	0.20	2.50	0.90	0.90	1.30	5.40	2.20	0.40	0.557	0.15	0.18	0.20	516.26	5.94	〃	48.98
200 _ 300	0.20	3.00	0.95	0.95	1.35	6.50	2.30	0.45	0.578	0.15	0.18	0.20	561.11	6.57	〃	53.32
200 _ 350	0.20	3.50	1.00	1.00	1.45	7.55	2.40	0.45	0.599	0.15	0.18	0.20	606.86	7.21	〃	57.79
200 _ 400	0.20	4.00	1.00	1.00	1.55	8.60	2.45	0.45	0.618	0.15	0.18	0.20	642.81	7.70	〃	61.00
300 _ 100	0.30	1.00	0.85	0.85	1.25	2.05	2.05	0.35	0.525	0.15	0.18	0.20	432.79	4.87	1.15x0.45	42.30
300 _ 150	0.30	1.50	0.95	0.95	1.30	3.20	2.25	0.40	0.571	0.15	0.18	0.20	497.85	5.73	〃	48.35
300 _ 200	0.30	2.00	1.00	1.00	1.35	4.30	2.40	0.45	0.608	0.15	0.18	0.20	538.75	6.44	〃	53.20
300 _ 250	0.30	2.50	1.05	1.05	1.45	5.40	2.55	0.45	0.636	0.15	0.18	0.20	598.22	7.19	〃	58.34
300 _ 300	0.30	3.00	1.05	1.05	1.55	6.50	2.65	0.50	0.665	0.15	0.18	0.20	641.96	7.79	〃	62.17
300 _ 350	0.30	3.50	1.10	1.10	1.65	7.55	2.75	0.50	0.688	0.15	0.18	0.20	698.07	8.51	〃	67.04
300 _ 400	0.30	4.00	1.15	1.15	1.75	8.60	2.85	0.50	0.709	0.15	0.18	0.20	746.82	9.20	〃	71.96
400 _ 100	0.40	1.00	0.95	0.85	1.35	2.05	2.25	0.40	0.574	0.15	0.18	0.20	481.08	5.54	1.30x0.50	47.34
400 _ 150	0.40	1.50	1.00	0.95	1.40	3.20	2.45	0.45	0.624	0.15	0.18	0.20	536.61	6.41	〃	53.02
400 _ 200	0.40	2.00	1.05	1.00	1.50	4.30	2.60	0.50	0.662	0.15	0.18	0.20	607.76	7.21	〃	58.41
400 _ 250	0.40	2.50	1.10	1.05	1.60	5.40	2.75	0.50	0.695	0.15	0.18	0.20	662.08	8.02	〃	63.88
400 _ 300	0.40	3.00	1.15	1.05	1.70	6.50	2.85	0.55	0.723	0.15	0.18	0.20	707.93	8.75	〃	68.94
400 _ 350	0.40	3.50	1.20	1.10	1.80	7.55	2.95	0.55	0.748	0.15	0.18	0.20	765.13	9.52	〃	74.16
400 _ 400	0.40	4.00	1.20	1.15	1.90	8.60	3.05	0.55	0.771	0.15	0.18	0.20	822.52	10.20	〃	78.38
500 _ 100	0.50	1.00	1.00	0.90	1.45	2.05	2.45	0.45	0.621	0.15	0.18	0.20	532.42	6.34	1.40x0.55	52.64
500 _ 150	0.50	1.50	1.10	1.00	1.50	3.20	2.65	0.50	0.671	0.15	0.18	0.20	604.61	7.34	〃	59.57
500 _ 200	0.50	2.00	1.15	1.05	1.60	4.30	2.80	0.55	0.714	0.15	0.18	0.20	675.59	8.20	〃	65.34
500 _ 250	0.50	2.50	1.20	1.10	1.70	5.40	3.00	0.55	0.752	0.15	0.18	0.20	728.13	9.11	〃	71.45
500 _ 300	0.50	3.00	1.25	1.15	1.80	6.50	3.10	0.60	0.779	0.15	0.18	0.25	797.98	9.95	〃	77.12
500 _ 350	0.50	3.50	1.25	1.15	1.95	7.55	3.20	0.60	0.807	0.15	0.18	0.25	843.95	10.65	〃	81.58
500 _ 400	0.50	4.00	1.30	1.20	2.10	8.60	3.30	0.60	0.834	0.15	0.18	0.25	906.75	11.50	〃	87.40
600 _ 100	0.60	1.00	1.05	0.95	1.50	2.05	2.60	0.50	0.661	0.15	0.18	0.20	595.39	6.90	1.50x0.60	56.71
600 _ 150	0.60	1.50	1.15	1.05	1.60	3.20	2.80	0.55	0.716	0.15	0.18	0.20	673.40	7.99	〃	64.23
600 _ 200	0.60	2.00	1.20	1.10	1.70	4.30	3.00	0.60	0.761	0.15	0.18	0.20	740.99	8.93	〃	70.57
600 _ 250	0.60	2.50	1.25	1.15	1.80	5.40	3.15	0.60	0.797	0.15	0.18	0.25	805.67	9.87	〃	76.97
600 _ 300	0.60	3.00	1.30	1.15	1.95	6.50	3.30	0.65	0.827	0.15	0.18	0.25	878.36	10.76	〃	83.22
600 _ 350	0.60	3.50	1.35	1.20	2.10	7.55	3.40	0.65	0.854	0.15	0.18	0.25	950.15	11.65	〃	89.33
600 _ 400	0.60	4.00	1.35	1.20	2.20	8.60	3.50	0.65	0.884	0.15	0.18	0.25	1001.31	12.37	〃	93.84
700 _ 100	0.70	1.00	1.10	1.00	1.55	2.05	2.70	0.55	0.691	0.15	0.18	0.20	520.89	7.46	1.60x0.65	60.66
700 _ 150	0.70	1.50	1.20	1.10	1.70	3.20	2.95	0.60	0.748	0.15	0.18	0.20	704.60	8.67	〃	69.04
700 _ 200	0.70	2.00	1.25	1.15	1.80	4.30	3.15	0.65	0.795	0.15	0.18	0.20	778.99	9.66	〃	75.69
700 _ 250	0.70	2.50	1.30	1.15	1.90	5.40	3.30	0.65	0.831	0.15	0.18	0.25	834.37	10.58	〃	82.17
700 _ 300	0.70	3.00	1.35	1.20	2.05	6.50	3.40	0.70	0.864	0.15	0.18	0.25	927.73	11.55	〃	88.68
700 _ 350	0.70	3.50	1.40	1.25	2.20	7.55	3.55	0.70	0.896	0.15	0.18	0.25	982.81	12.53	〃	95.38
700 _ 400	0.70	4.00	1.40	1.25	2.30	8.60	3.65	0.70	0.923	0.15	0.18	0.25	1040.27	13.29	〃	100.14
800 _ 100	0.80	1.00	1.15	1.00	1.60	2.05	2.90	0.60	0.744	0.15	0.18	0.20	657.88	8.18	1.60x0.70	64.44
800 _ 150	0.80	1.50	1.25	1.10	1.75	3.20	3.15	0.65	0.805	0.15	0.18	0.20	746.16	9.09	〃	73.04
800 _ 200	0.80	2.00	1.30	1.15	1.85	4.30	3.35	0.70	0.854	0.15	0.18	0.25	826.26	10.12	〃	80.13
800 _ 250	0.80	2.50	1.40	1.25	2.00	5.40	3.50	0.70	0.893	0.15	0.18	0.25	902.88	11.28	〃	88.41
800 _ 300	0.80	3.00	1.45	1.25	2.15	6.50	3.70	0.75	0.929	0.15	0.18	0.25	978.39	12.27	〃	95.46
800 _ 350	0.80	3.50	1.50	1.35	2.30	7.55	3.80	0.75	0.962	0.15	0.18	0.25	1050.67	13.29	〃	102.28
800 _ 400	0.80	4.00	1.50	1.35	2.40	8.60	3.95	0.75	0.992	0.15	0.18	0.25	1107.96	14.10	〃	107.42

STR.	Q m^3/s	H max. m.	H_4 m.	H_5 m.	L_2 m.	L_3 m.	L_4 m.	L_5 m.	Y_2+hv_2 m.	t_2 m.	t_3 m.	h m.	R.B.② Kg	Conc.③ m^3	Gate m.	F.W.④ m^2
900 _ 100	0.90	1.00	1.20	1.05	1.70	2.05	3.00	0.65	0.768	0.15	0.18	0.20	687.92	8.56	1.70 x 0.70	68.71
900 _ 150	0.90	1.50	1.30	1.15	1.80	3.20	3.25	0.70	0.831	0.15	0.18	0.20	782.75	9.79	〃	77.20
900 _ 200	0.90	2.00	1.35	1.20	1.90	4.30	3.45	0.75	0.882	0.15	0.18	0.25	862.08	10.85	〃	84.38
900 _ 250	0.90	2.50	1.40	1.25	2.10	5.40	3.65	0.75	0.921	0.15	0.18	0.25	942.31	11.97	〃	91.87
900 _ 300	0.90	3.00	1.45	1.25	2.20	6.50	3.80	0.80	0.958	0.15	0.18	0.25	1010.86	12.92	〃	98.40
900 _ 350	0.90	3.50	1.50	1.35	2.40	7.55	3.95	0.80	0.992	0.15	0.18	0.25	1076.44	14.04	〃	105.82
900 _ 400	0.90	4.00	1.55	1.35	2.50	8.60	4.05	0.80	1.018	0.15	0.18	0.25	1153.40	14.93	〃	112.01
1000 _ 100	1.00	1.00	1.25	1.10	1.75	2.05	3.15	0.70	0.815	0.15	0.18	0.20	726.13	9.37	1.70 x 0.75	74.61
1000 _ 150	1.00	1.50	1.35	1.20	1.85	3.20	3.45	0.75	0.879	0.15	0.18	0.25	820.89	10.71	〃	83.93
1000 _ 200	1.00	2.00	1.45	1.30	2.00	4.30	3.65	0.80	0.930	0.15	0.18	0.25	910.40	11.97	〃	92.75
1000 _ 250	1.00	2.50	1.50	1.35	2.15	5.40	3.85	0.80	0.975	0.15	0.18	0.25	976.14	13.07	〃	100.21
1000 _ 300	1.00	3.00	1.55	1.40	2.30	6.50	4.00	0.85	1.008	0.15	0.18	0.30	1081.62	14.17	〃	107.79
1000 _ 350	1.00	3.50	1.65	1.45	2.50	7.55	4.15	0.85	1.046	0.15	0.18	0.30	1145.70	15.37	〃	115.19
1000 _ 400	1.00	4.00	1.65	1.50	2.60	8.60	4.25	0.85	1.079	0.15	0.18	0.30	1221.66	16.24	〃	121.79
1200 _ 100	1.20	1.00	1.30	1.15	1.85	2.05	3.35	0.75	0.859	0.15	0.18	0.25	820.86	10.52	1.85x0.80	81.54
1200 _ 150	1.20	1.50	1.40	1.25	2.00	3.20	3.60	0.80	0.926	0.15	0.18	0.25	923.50	11.91	〃	90.99
1200 _ 200	1.20	2.00	1.50	1.35	2.10	4.30	3.85	0.85	0.979	0.15	0.18	0.25	1003.39	13.25	〃	100.26
1200 _ 250	1.20	2.50	1.55	1.40	2.25	5.40	4.05	0.85	1.027	0.15	0.18	0.30	1099.45	14.46	〃	108.43
1200 _ 300	1.20	3.00	1.60	1.40	2.45	6.50	4.20	0.90	1.064	0.15	0.18	0.30	1181.38	15.56	〃	116.02
1200 _ 350	1.20	3.50	1.65	1.45	2.60	7.55	4.35	0.90	1.103	0.15	0.18	0.30	1249.02	16.67	〃	123.49
1200 _ 400	1.20	4.00	1.70	1.50	2.75	8.60	4.45	0.90	1.128	0.18	0.18	0.30	1373.19	18.53	〃	131.20
1400 _ 100	1.40	1.00	1.35	1.20	1.90	2.05	3.45	0.75	0.894	0.15	0.18	0.25	859.27	11.21	2.00x0.85	85.71
1400 _ 150	1.40	1.50	1.45	1.30	2.10	3.20	3.75	0.80	0.964	0.15	0.18	0.25	961.96	12.72	〃	95.92
1400 _ 200	1.40	2.00	1.55	1.35	2.20	4.30	4.00	0.85	1.019	0.15	0.18	0.25	1061.90	14.04	〃	105.09
1400 _ 250	1.40	2.50	1.60	1.40	2.40	5.40	4.20	0.85	1.068	0.15	0.18	0.30	1157.00	15.33	〃	113.66
1400 _ 300	1.40	3.00	1.65	1.45	2.60	6.50	4.35	0.90	1.105	0.15	0.18	0.30	1234.25	16.56	〃	121.64
1400 _ 350	1.40	3.50	1.70	1.50	2.80	7.55	4.55	0.90	1.147	0.18	0.18	0.30	1348.12	18.53	〃	130.03
1400 _ 400	1.40	4.00	1.75	1.55	2.90	8.60	4.65	0.90	1.180	0.18	0.18	0.30	1439.15	19.70	〃	137.40
1600 _ 100	1.60	1.00	1.45	1.30	2.00	2.05	3.70	0.75	0.963	0.15	0.18	0.25	951.93	12.35	2.00x0.90	94.59
1600 _ 150	1.60	1.50	1.55	1.40	2.15	3.20	4.00	0.85	1.034	0.15	0.18	0.25	1078.46	13.88	〃	104.90
1600 _ 200	1.60	2.00	1.65	1.45	2.30	4.30	4.30	0.90	1.094	0.15	0.18	0.30	1167.67	15.35	〃	115.52
1600 _ 250	1.60	2.50	1.70	1.50	2.50	5.40	4.50	0.90	1.145	0.18	0.18	0.30	1292.55	17.38	〃	124.32
1600 _ 300	1.60	3.00	1.75	1.55	2.70	6.50	4.70	0.95	1.192	0.18	0.18	0.30	1392.60	18.73	〃	132.95
1600 _ 350	1.60	3.50	1.80	1.60	2.90	7.55	4.85	0.95	1.228	0.18	0.18	0.35	1554.08	20.05	〃	141.63
1600 _ 400	1.60	4.00	1.85	1.60	3.05	8.60	5.00	0.95	1.265	0.18	0.18	0.35	1630.18	21.20	〃	149.32
1800 _ 100	1.80	1.00	1.50	1.35	2.05	2.05	3.85	0.80	1.000	0.15	0.18	0.25	1001.92	13.13	2.10 x 0.95	99.20
1800 _ 150	1.80	1.50	1.60	1.45	2.20	3.20	4.20	0.90	1.077	0.15	0.18	0.30	1122.87	14.79	〃	110.48
1800 _ 200	1.80	2.00	1.70	1.50	2.40	4.30	4.45	0.95	1.138	0.18	0.18	0.30	1266.80	16.99	〃	121.06
1800 _ 250	1.80	2.50	1.80	1.60	2.60	5.40	4.65	0.95	1.191	0.18	0.18	0.30	1450.64	18.61	〃	131.63
1800 _ 300	1.80	3.00	1.85	1.65	2.80	6.50	4.85	1.00	1.236	0.18	0.18	0.35	1562.12	20.04	〃	140.97
1800 _ 350	1.80	3.50	1.90	1.70	3.00	7.55	5.00	1.00	1.274	0.18	0.20	0.35	1785.58	21.96	〃	149.57
1800 _ 400	1.80	4.00	1.95	1.70	3.20	8.60	5.20	1.00	1.312	0.18	0.20	0.35	1869.75	23.29	〃	158.14
2000 _ 100	2.00	1.00	1.55	1.35	2.10	2.05	3.95	0.80	1.030	0.15	0.18	0.25	1050.12	13.78	2.20x1.00	103.66
2000 _ 150	2.00	1.50	1.65	1.45	2.30	3.20	4.30	0.90	1.108	0.15	0.18	0.30	1172.08	15.53	〃	115.45
2000 _ 200	2.00	2.00	1.75	1.55	2.50	4.30	4.60	1.00	1.173	0.18	0.18	0.30	1311.83	17.95	〃	126.87
2000 _ 250	2.00	2.50	1.80	1.60	2.70	5.40	4.80	1.00	1.225	0.18	0.18	0.35	1495.55	19.41	〃	136.18
2000 _ 300	2.00	3.00	1.90	1.70	2.90	6.50	5.00	1.05	1.272	0.18	0.20	0.35	1755.14	21.69	〃	147.38
2000 _ 350	2.00	3.50	1.95	1.70	3.10	7.55	5.15	1.05	1.310	0.18	0.20	0.35	1851.63	22.99	〃	155.59
2000 _ 400	2.00	4.00	2.00	1.75	3.30	8.60	5.35	1.05	1.351	0.20	0.22	0.35	2249.34	25.84	〃	165.19

① STR. Type of structure
② R.B. Reinforcing bar. required
③ Conc. Conc required
④ F.W. Form work required

REFERENCE DWGS: For plan & section see dwg. № 11/1/1/01
For standard dimension table see dwg. № 11/1/2/02

Scale:	IRRIGATION & DRAINAGE STANDARDS		
Date:	DWG.№ 11/1/2/01	RECTANGULAR INCLINED DROP DIMENSION TABLE	
Approved:	Sheet № 3 of 32	Rev.№	

ISLAMIC REPUBLIC OF IRAN
MINISTRY OF PLAN & BUDJET
TECHNICAL RESEARCH AND STANDARD BUREAU

@omoorepeyman.ir

DIMENSION TABLE

STR.	Q m³/s	H max. m.	H_4 m.	H_5 m.	L_2 m.	L_3 m.	L_4 m.	L_5 m.	Y_2+hv_2 m.	t_2 m.	t_3 m.	h m.	R.B.② Kg.	Conc.③ m³	Gate m.	F.W.④ m²
2250_100	2.25	1.00	1.60	1.40	2.2	2.05	4.30	0.85	1.074	0.15	0.18	0.25	1115.39	14.75	2.30x1.05	110.37
2250_150	2.25	1.50	1.70	1.50	2.40	3.20	4.65	0.95	1.153	0.18	0.18	0.30	1279.70	17.29	〃	122.80
2250_200	2.25	2.00	1.80	1.60	2.60	4.30	4.75	1.05	1.222	0.18	0.18	0.30	1482.01	19.04	〃	134.06
2250_250	2.25	2.50	1.90	1.70	2.80	5.40	5.00	1.05	1.275	0.18	0.20	0.35	1747.91	21.45	〃	146.38
2250_300	2.25	3.00	1.95	1.75	3.00	6.50	5.20	1.10	1.324	0.18	0.20	0.35	1840.65	22.99	〃	155.71
2250_350	2.25	3.50	2.00	1.75	3.25	7.55	5.40	1.10	1.367	0.20	0.22	0.35	2248.05	25.82	〃	165.58
2250_400	2.25	4.00	2.05	1.80	3.40	8.60	5.55	1.10	1.405	0.20	0.22	0.35	2354.28	27.33	〃	174.20
2500_100	2.50	1.00	1.65	1.45	2.25	2.05	4.30	0.85	1.113	0.15	0.18	0.30	1222.40	15.93	2.40x1.10	118.01
2500_150	2.50	1.50	1.75	1.55	2.45	3.20	4.65	0.95	1.197	0.18	0.18	0.30	1372.64	16.53	〃	130.22
2500_200	2.50	2.00	1.85	1.65	2.70	4.30	4.90	1.05	1.263	0.18	0.18	0.35	1575.11	20.42	〃	142.64
2500_250	2.50	2.50	1.95	1.70	2.90	5.40	5.15	1.05	1.320	0.18	0.20	0.35	1853.85	22.79	〃	154.40
2500_300	2.50	3.00	2.00	1.75	3.10	6.50	5.35	1.10	1.365	0.20	0.22	0.35	2298.25	25.74	〃	164.41
2500_350	2.50	3.50	2.05	1.80	3.35	7.55	5.55	1.15	1.409	0.20	0.22	0.40	2382.68	27.48	〃	174.85
2500_400	2.50	4.00	2.10	1.85	3.55	8.60	5.70	1.15	1.453	0.22	0.24	0.40	2589.36	30.62	〃	184.57
2750_100	2.75	1.00	1.70	1.50	2.30	2.05	4.40	0.90	1.149	0.18	0.18	0.30	1305.38	17.49	2.50x1.15	123.66
2750_150	2.75	1.50	1.85	1.60	2.50	3.20	4.80	1.00	1.233	0.18	0.18	0.30	1530.26	19.52	〃	136.53
2750_200	2.75	2.00	1.90	1.65	2.75	4.30	5.05	1.10	1.298	0.18	0.20	0.35	1817.04	21.99	〃	149.35
2750_250	2.75	2.50	2.00	1.75	3.00	5.40	5.30	1.10	1.360	0.20	0.22	0.35	2243.97	25.33	〃	162.36
2750_300	2.75	3.00	2.05	1.80	3.20	6.50	5.50	1.15	1.409	0.20	0.22	0.35	2372.64	27.36	〃	172.21
2750_350	2.75	3.50	2.10	1.85	3.45	7.55	5.70	1.20	1.455	0.22	0.24	0.40	2533.59	30.40	〃	183.59
2750_400	2.75	4.00	2.15	1.85	3.65	8.60	5.90	1.20	1.495	0.22	0.24	0.40	2638.01	32.11	〃	193.22
3000_100	3.00	1.00	1.75	1.55	2.35	2.05	4.60	0.90	1.196	0.18	0.18	0.30	1362.46	18.38	2.60x1.20	129.64
3000_150	3.00	1.50	1.85	1.60	2.60	3.20	4.90	1.00	1.264	0.18	0.18	0.30	1593.34	20.46	〃	142.07
3000_200	3.00	2.00	1.95	1.70	2.80	4.30	5.20	1.10	1.334	0.18	0.20	0.35	1972.52	23.13	〃	155.43
3000_250	3.00	2.50	2.00	1.75	3.10	5.40	5.45	1.15	1.395	0.20	0.22	0.35	2296.25	26.34	〃	166.85
3000_300	3.00	3.00	2.10	1.85	3.30	6.50	5.65	1.20	1.445	0.22	0.24	0.40	2530.69	29.89	〃	179.99
3000_350	3.00	3.50	2.15	1.85	3.35	7.55	5.85	1.25	1.494	0.22	0.24	0.40	2657.59	31.78	〃	190.28

STANDARD DIMENSION TABLE

Q Max. m³/s.	B m.	b_1 m.	c m.	H_1 Min.	H_2 Min.	H_3 m.	L_1 m.	L_6 m.	d m.	N	D_1 m.	t_1 m.	Gate m.	Gate frame m.
0.200	1.00	0.60	0.60	0.35	0.85	0.55	1.10	1.70	0.20	3	0.65	0.15	1.00x 0.35	0.80
0.300	1.15	0.60	0.70	0.45	0.95	0.60	1.10	1.90	0.075	5	0.65	0.15	1.15 x 0.45	1.00
0.400	1.30	0.60	0.75	0.50	1.00	0.65	1.10	2.10	0.15	5	0.65	0.15	1.30x 0.50	1.10
0.500	1.40	0.60	0.80	0.55	1.05	0.70	1.40	2.30	0.20	5	0.65	0.15	1.40x 055	1.20
0.600	1.50	0.60	0.85	0.60	1.10	0.75	1.40	2.40	0.25	5	0.65	0.15	1.50x 0.60	1.30
0.700	1.60	0.60	0.90	0.65	1.15	0.80	1.40	2.50	0.30	5	0.65	0.15	1.60 x 0.65	1.40
0.800	1.60	0.60	0.95	0.70	1.20	0.80	1.40	2.60	0.10	7	0.65	0.15	1.60x 0.70	1.50
0.900	1.70	0.60	1.00	0.70	1.20	0.80	1.70	2.70	0.15	7	0.65	0.15	1.70 x 070	1.50
1.000	1.70	0.60	1.05	0.75	1.25	0.80	1.70	2.70	0.15	7	0.75	0.20	1.70 x 0.75	1.60
1.200	1.85	0.75	1.15	0.80	1.30	0.85	1.70	3.00	0.225	7	0.75	0.20	1.85 x 0.80	1.80
1.400	2.00	0.75	1.20	0.85	1.35	0.85	1.70	3.00	0.30	7	0.75	0.20	2.00x 0.85	1.90
1.600	2.00	0.75	1.25	0.90	1.40	0.85	2.00	3.30	0.10	9	0.75	0.20	2.00x 0.90	2.00
1.800	2.10	0.90	1.30	0.95	1.45	0.85	2.00	3.30	0.15	9	0.75	0.20	2.10 x 0.95	2.10
2.000	2.20	0.90	1.35	1.00	1.50	0.85	2.00	3.40	0.20	9	0.75	0.20	2.20x 1.00	2.20
2.250	2.30	0.90	1.45	1.05	1.55	0.90	2.00	3.50	0.25	9	0.75	0.20	2.30x 1.05	2.30
2.500	2.40	1.05	1.50	1.10	1.60	0.90	2.30	3.60	0.10	11	0.75	0.20	2.40x1.10	2.40
2.750	2.50	1.05	1.55	1.15	1.65	0.95	2.30	3.70	0.15	11	0.75	0.20	2.50 x1.15	2.50
3.000	2.60	1.20	1.60	1.20	1.70	0.95	2.30	3.80	0.20	11	0.75	0.20	2.60x1 20	2.60

DESIGN DETA

STR. No.	CANAL	STATION	Q m³/s	CHECK INLET	CONTROL INLET	DIMENSIONS L_1 m.	L_2 m.	L_3 m.	L_4 m.	L_5 m.	L_6 m.	H m.	H_1 m.	H_2 m.	H_3 m.	H_4 m.	H_5 m.	t_1 m.	t_2 m.	t_3 m.				ELEVATIONS A m.	B m.	C m.	D m.	No. WEEP HOLES	CONC. m³	R/BAR Kg	REMARKS

NOTE :1-Use the following instruction for selecting reinforcement dwg.

If $0.80 < H4 \leqslant 1.85$ See dwg. No. 11/1/3/0

If $1.85 < H4 \leqslant 1.95$ See dwg. No. 11/1/3/

If $1.95 < H4 \leqslant 2.20$ See dwg. No. 11/1/3/

2-For El. A To El. D See dwg. No. 11/1/1/

3_N in standard Dimensions Table is th Nos. of concrete block as shown in DW No. 11/1/1/01

① STR. Type of structure
② R.B. Reinforcing bar. required
③ Conc. Conc. required
④ F.W. Form work required

NOS. OF WEEP HOLES AS SHOWN IN DWG. 11/1/1/01

H(m) \ Q lit/s	200	300	400	500	600	700	800	900	1000	1200	1400	1600	1800	2000	2250	2500	2750	3000
100																		
150																		
200		6 NOS						8 NOS.							10 NOS.			
250																		
300																		
350																		
400																		

GRADATION OF FILTER MATERIALS

FILTER MATERIAL	PERCENT (BY WEIGHT) RETAINED ON STANDARD SEIVE No 200	No 100	No 50	No 30	No 16	No 8	No 4	3/8"	3/4"	1 1/2"
SAND	97_100	93_97	74_85	38_70	15_45	5_25	0_5			
COARCE AGGREGATE					95_100	75_90	60_80	40_60	20_35	0

REFERENCE DWGS: For : pting dimentions see dwg. No. 11/1/1/01

Scale	IRRIGATION & DRAINAGE STANDARDS	
Date:	DWG No. 11/1/2/02	RECTANGULAR INCLINED DROP
Approved:	Sheet No. 4 of 32 Rev. No	DIMENSION TABLE

ISLAMIC REPUBLIC OF IRAN
MINISTRY OF PLAN & BUDGET
TECHNICAL RESEARCH AND STANDARD BUREAU

omoorepeyman.ir

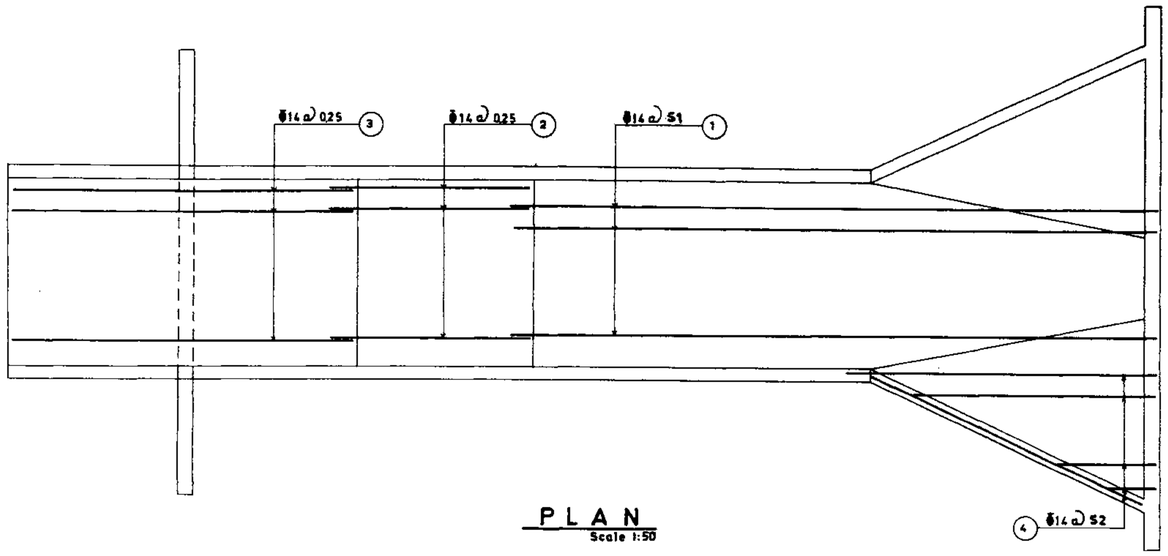

PLAN
Scale 1:50

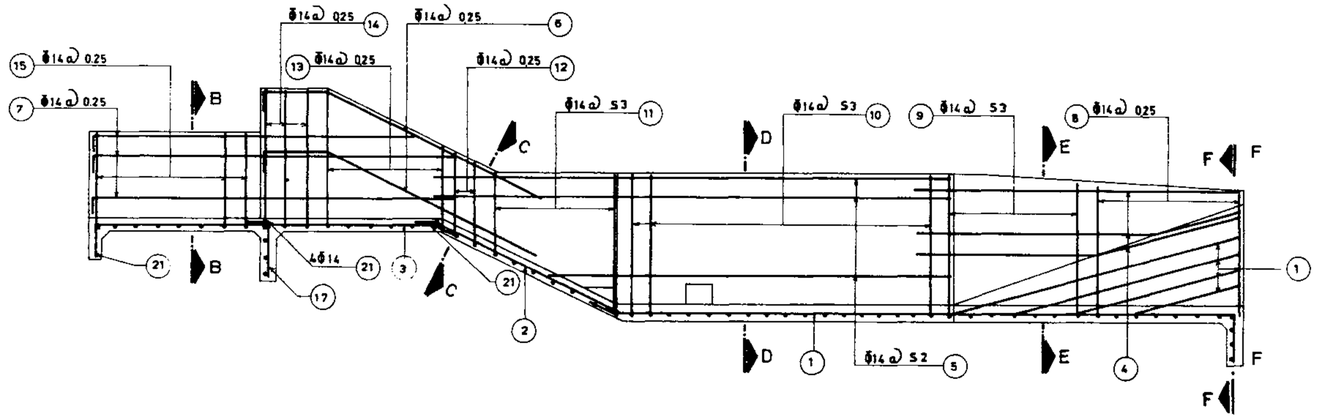

LONGITUDINAL SECTION
Scale 1:50

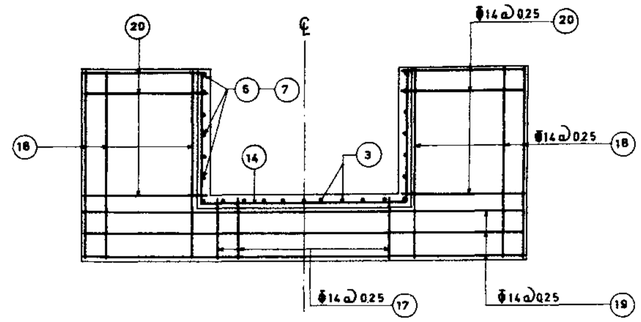

SECTION B_B
Scale 1:50

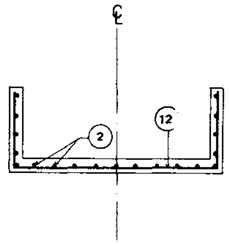

SECTION C_C
Scale 1:50

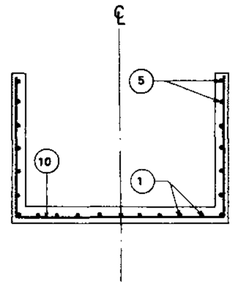

SECTION D_D
Scale 1:50

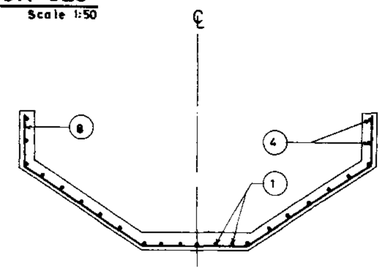

SECTION E_E
Scale 1:50

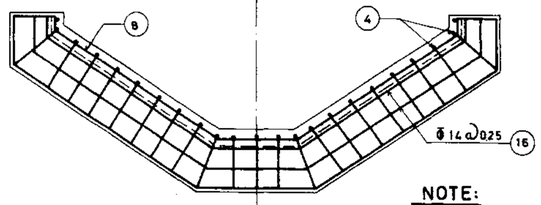

SECTION F_F
Scale 1:50

PARAMETRIC BAR SPACING

H4	S_1	S_2	S_3
0.80 ≤ H4 ≤ 1.65	0.22	0.25	0.22
1.65 < H4 ≤ 1.75	0.22	0.22	0.22
1.75 < H4 ≤ 1.85	0.22	0.22	0.18

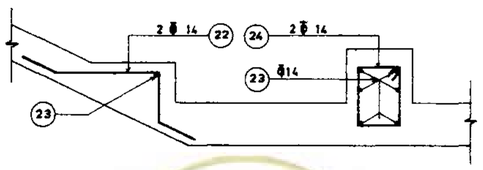

BAFFLE REINFORCEMENT DETAIL

NOTE:

1) Use this dwg. for 0.80<H4≤1.85

2) For concrete & reinforcement specification see dwg. No.

REFERENCE DWGS:

For dimensions see dwgs. Nº 11/1/2/01 & 11/1/2/02

For list of reinforcement see dwgs. Nº 11/1/3/04 TO 11/1/3/28

Scale: 1:20 1:50	IRRIGATION & DRAINAGE STANDARDS		ISLAMIC REPUBLIC OF IRAN MINISTRY OF PLAN & BUDGET TECHNICAL RESEARCH AND STANDARD BUREAU
Date:	DWG.No. 11/1/3/01	RECTANGULAR INCLINED DROP REINFORCEMENT PLAN & SECTION	
Approved:	Sheet No. 5 of 32 Rev.No.		

omoorepeyman.ir

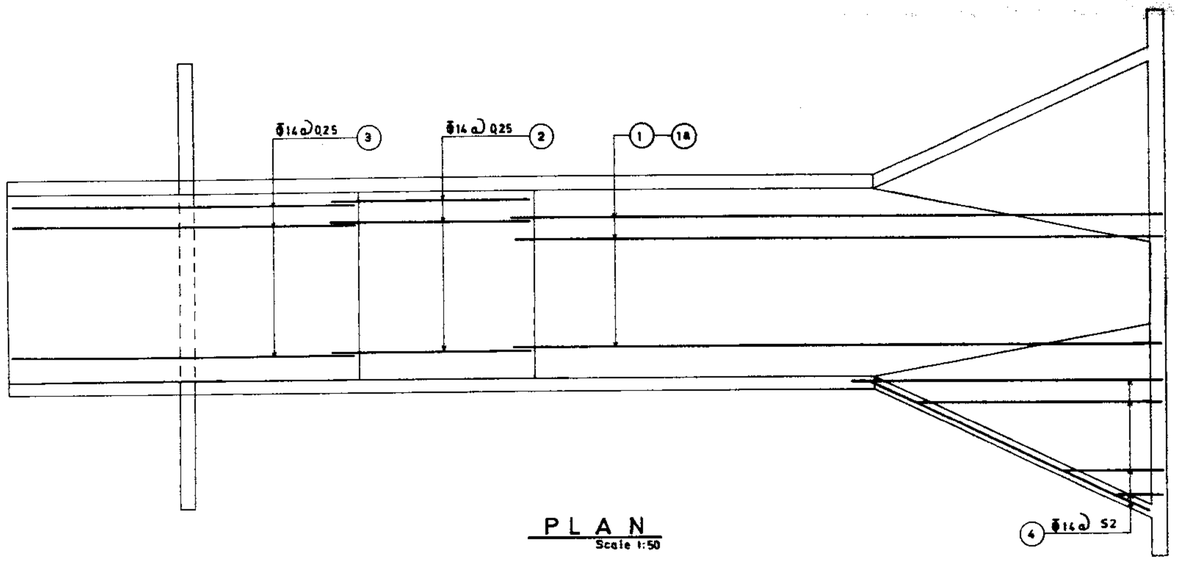

PLAN
Scale 1:50

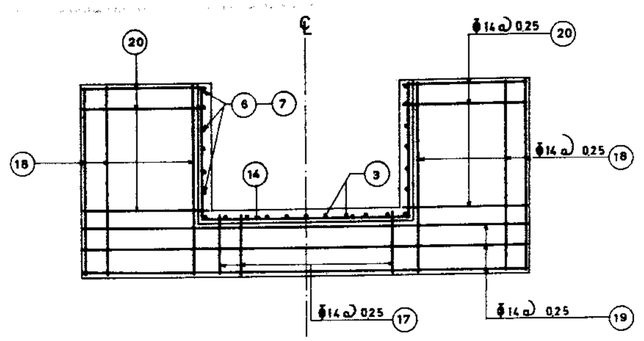

SECTION B_B
Scale 1:50

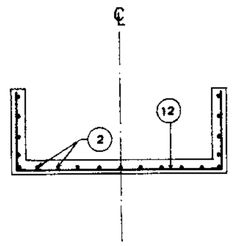

SECTION C_C
Scale 1:50

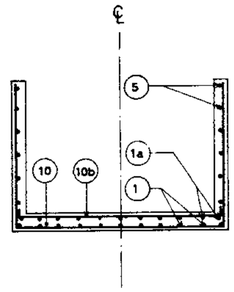

SECTION D_D
Scale 1:50

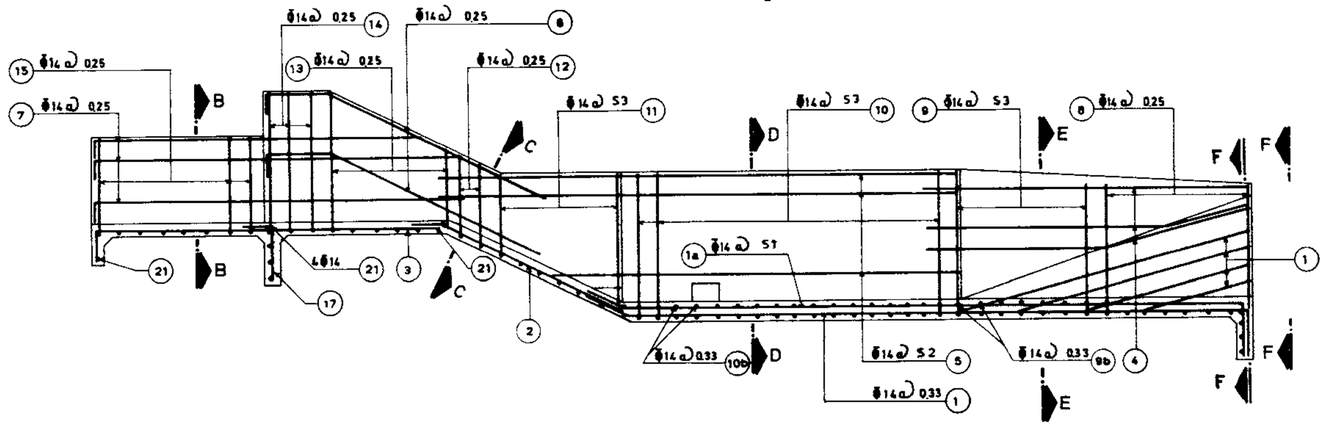

LONGITUDINAL SECTION
Scale 1:50

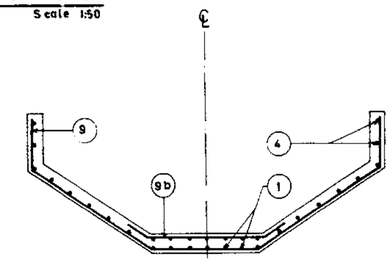

SECTION E_E
Scale 1:50

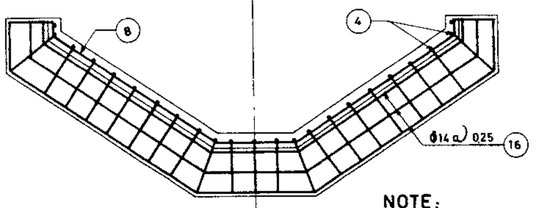

SECTION F_F
Scale 1:50

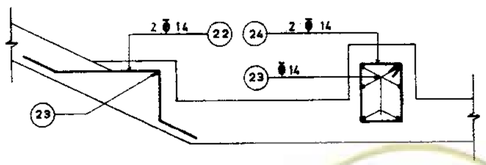

BAFFLE REINFORCEMENT DETAIL

PARAMETRIC BAR SPACING

H4	S_1	S_2	S_3
1.85 < H4 ≤ 1.95	0.30	0.22	0.18

NOTE:

1) Use this dwg. for $1.85 < H4 \leq 1.95$
2) For concrete & reinforcement specification see dwg. No.

REFERENCE DWGS:
For dimensions see dwgs. 11/1/2/01 & 11/1/2/02
For list of reinforcement see dwgs. 11/1/3/04 TO 11/1/3/28

Scale: 1:20 1:50
Date:
Approved:

IRRIGATION & DRAINAGE STANDARDS

DWG.NO. 11/1/3/02
Sheet NO. 6 of 32 | Rev.NO

RECTANGULAR INCLINED DROP REINFORCEMENT
PLAN & SECTION

ISLAMIC REPUBLIC OF IRAN
MINISTRY OF PLAN & BUDJET
TECHNICAL RESEARCH AND STANDARD BUREAU

omoorepeyman.ir

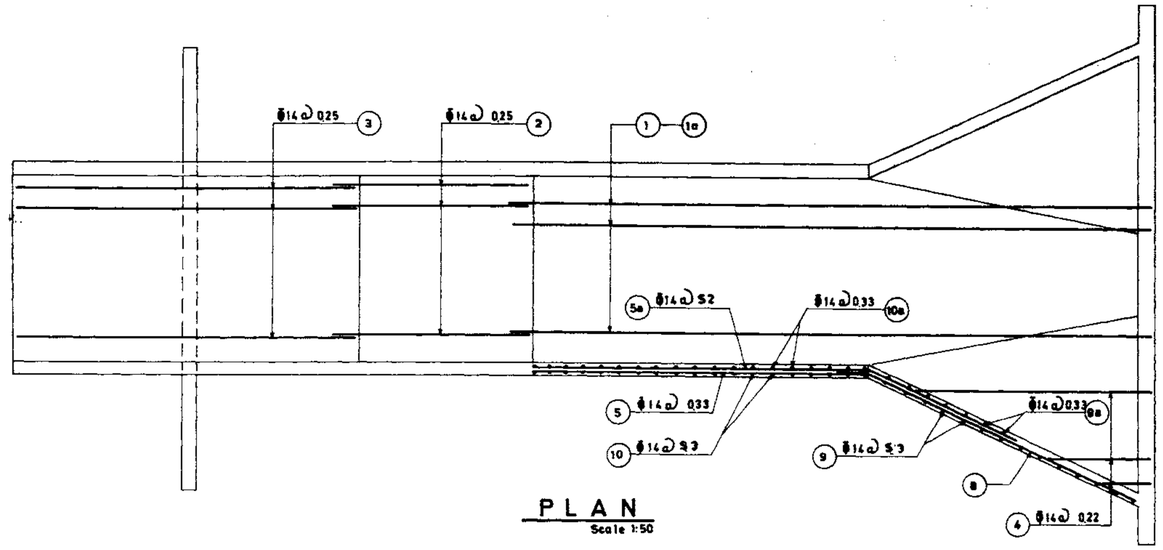

PLAN
Scale 1:50

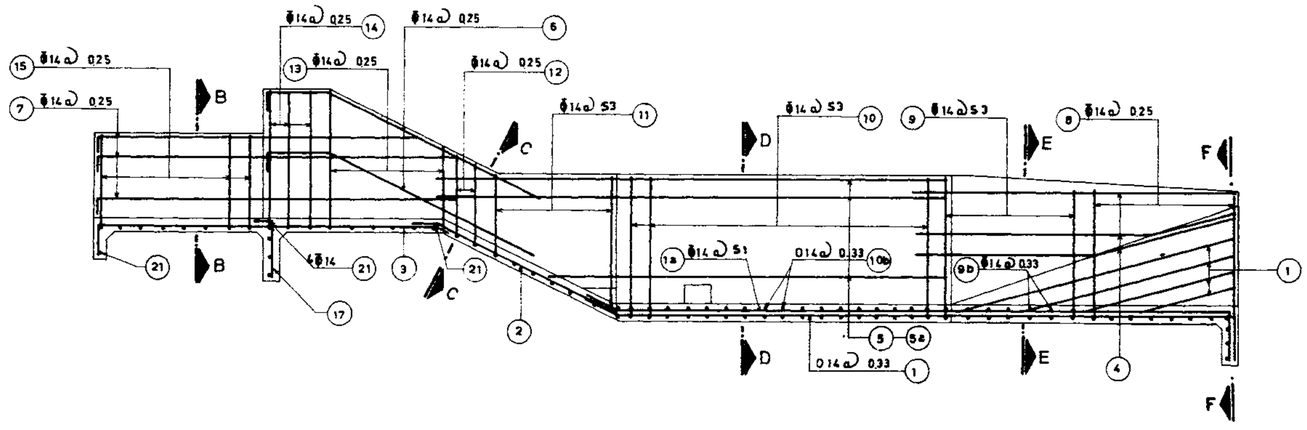

LONGITUDINAL SECTION
Scale 1:50

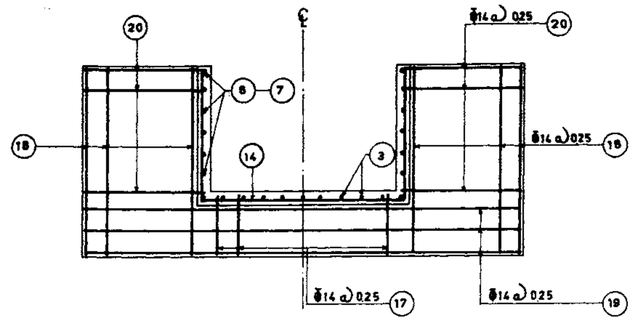

SECTION B_B
Scale 1:50

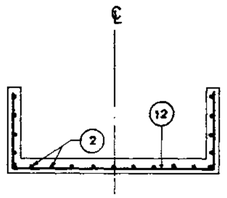

SECTION C_C
Scale 1:50

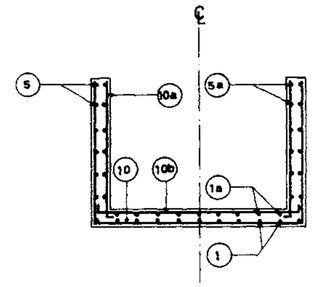

SECTION D_D
Scale 1:50

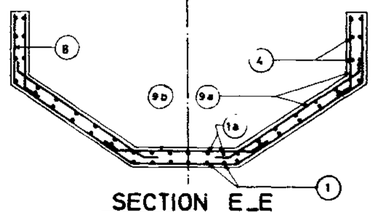

SECTION E_E
Scale 1:50

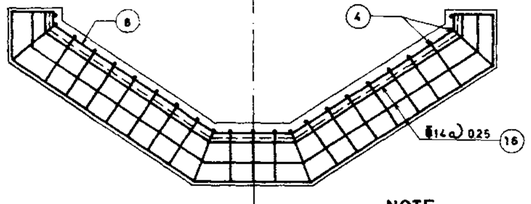

SECTION F_F
Scale 1:50

PARAMETRIC BAR SPACING

H4	S1	S2	S3
1.95 < H4 ≤ 2.05	0.28	030	018
2.05 < H4 ≤ 2.20	0.25	028	018

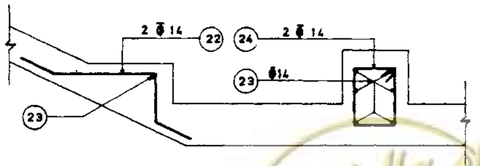

BAFFLE REINFORCEMENT DETAIL

NOTE:
1) Use this dwg. for 1.95 < H4 ≤ 2.20
2) For concrete & reinforcement specification see dwg.No.

REFERENCE DWGS: For dimensions see dwgs.Nº 11/1/1/01 & 11/1/2/02
For list of reinforce: see dwgs.Nº 11/1/3/04 TO 11/1/3/28

Scale: 1:20 1:50
Date:
Approved:

IRRIGATION & DRAINAGE STANDARD

DWG Nº. 11/1/3/03
Sheet Nº 7 of 32 Rev. Nº.

RECTANGULAR INCLINED DROP
REINFORCEMENT
PLAN & SECTION

ISLAMIC REPUBLIC OF IRAN
MINISTRY OF PLAN & BUDJET
TECHNICAL RESEARCH AND STANDARD BUREAU

omoorepeyman.ir

STR. 200—100

Pos.	Nº.	FORM	UNIT LENG.	LENG.
1	7	0.50 3.43 0.50	4.43	31.01
1a	—		—	—
2	7	0.20 2.35	2.55	17.85
3	7	0.35 2.25 0.20	2.80	19.60
4	2x5	0.50 2.32	2.82	28.20
5	2x4	2.80	2.80	22.40
5a	—		—	—
6	2x3	0.20 0.48 2.90	3.58	21.48
7	2x2	0.20 2.70	2.90	11.60
8	5	1.13~1.39 0.60~0.91 1.13~1.39	3.28	16.40
9	4	0.88~1.13 0.91~1.21 0.88~1.13	3.07	12.28
9a	—		—	—
9b	—		—	—
10	8	0.88 1.21 0.88	2.97	23.76
10a	—		—	—
10b	—		—	—
11	4	0.60~0.88 1.21 0.60~0.88	2.69	10.76
12	6	0.60 1.21 0.60	2.41	14.46
13	4	0.60~0.90 1.21 0.60~0.90	2.71	10.84
14	3	0.90 1.21 0.90	3.01	9.03
15	5	0.40 1.21 0.40	2.01	10.05
16	3	1.45~1.86 0.66~0.85 1.45~1.86	4.07	12.21
17	5	0.50 0.20	0.70	3.50
18	8	1.40	1.40	11.20
19	3	2.40	2.40	7.20
20	10	0.65 0.20	0.85	8.50
21	4	0.20 1.21 0.20	1.61	6.44
22	2	0.20 0.40 0.25 0.25	1.10	2.20
23	13	0.035 0.035 0.09	0.21	2.73
24	4	0.09 0.23 0.09	0.84	3.36

TOTAL LENGTH 317.06

317.06 x 1.21 = 383.64 Kg.

STR. 200—150

Pos.	Nº.	FORM	UNIT LENG.	LENG.
1	7	0.50 3.58 0.50	4.58	32.06
1a	—		—	—
2	7	0.20 3.64	3.84	26.88
3	7	0.35 2.25 0.20	2.80	19.60
4	2x5	0.50 2.35	2.85	28.50
5	2x4	3.05	3.05	24.40
5a	—		—	—
6	2x3	0.20 0.48 4.08	4.76	28.56
7	2x2	0.20 2.70	2.90	11.60
8	5	1.21~1.48 0.60~0.91 1.21~1.48	3.45	17.25
9	5	0.93~1.21 0.91~1.21 0.93~1.21	3.20	16.00
9a	—		—	—
9b	—		—	—
10	8	0.93 1.21 0.93	3.07	24.56
10a	—		—	—
10b	—		—	—
11	4	0.60~0.93 1.21 0.60~0.93	2.74	10.96
12	11	0.60 1.21 0.60	2.41	26.51
13	4	0.60~0.90 1.21 0.60~0.90	2.71	10.84
14	3	0.90 1.21 0.90	3.01	9.03
15	5	0.40 1.21 0.40	2.01	10.05
16	3	1.54~1.96 0.66~0.84 1.54~1.96	4.25	12.75
17	5	0.50 0.20	0.70	3.50
18	8	1.40	1.40	11.20
19	3	2.40	2.40	7.20
20	10	0.65 0.20	0.85	8.50
21	4	0.20 1.21 0.20	1.61	6.44
22	2	0.20 0.40 0.25 0.25	1.10	2.20
23	13	0.035 0.035 0.09	0.21	2.73
24	4	0.09 0.23 0.09	0.84	3.36

TOTAL LENGTH 354.68

354.68 x 1.21 = 429.16 Kg.

STR. 200—200

Pos.	Nº.	FORM	UNIT LENG.	LENG.
1	7	0.50 3.73 0.50	4.73	33.11
1a	—		—	—
2	7	0.20 4.87	5.07	35.49
3	7	0.35 2.30 0.20	2.85	19.95
4	2x6	0.50 2.35	2.89	34.68
5	2x4	3.30	3.30	26.40
5a	—		—	—
6	2x3	0.20 0.53 5.20	5.93	35.58
7	2x2	0.20 2.75	2.95	11.80
8	5	1.28~1.58 0.60~0.91 1.28~1.58	3.62	18.10
9	4	0.98~1.28 0.91~1.21 0.98~1.28	3.32	13.28
9a	—		—	—
9b	—		—	—
10	8	0.98 1.21 0.98	3.17	28.53
10a	—		—	—
10b	—		—	—
11	5	0.60~0.98 1.21 0.60~0.98	2.79	13.95
12	15	0.60 1.21 0.60	2.41	36.15
13	4	0.60~0.90 1.21 0.60~0.90	2.71	10.84
14	3	0.90 1.21 0.90	3.01	9.03
15	5	0.40 1.21 0.40	2.01	10.05
16	3	1.64~2.06 0.66~0.83 1.64~2.06	4.45	13.35
17	5	0.50 0.20	0.70	3.50
18	8	1.40	1.40	11.20
19	3	2.40	2.40	7.20
20	10	0.65 0.20	0.85	8.50
21	4	0.20 1.21 0.20	1.61	6.44
22	2	0.20 0.40 0.25 0.25	1.10	2.20
23	13	0.035 0.035 0.09	0.21	2.73
24	4	0.09 0.23 0.09	0.84	3.36

TOTAL LENGTH 395.42

395.42 x 1.21 = 478.46 Kg.

STR. 200—250

Pos.	Nº.	FORM	UNIT LENG.	LENG.
1	7	0.50 3.83 0.50	4.83	33.81
1a	—		—	—
2	7	0.20 6.10	6.30	44.10
3	7	0.35 2.40 0.20	2.95	20.65
4	2x6	0.50 2.39	2.89	34.68
5	2x4	3.40	3.40	27.20
5a	—		—	—
6	2x3	0.20 0.63 6.43	7.26	43.56
7	2x2	0.20 2.85	3.05	12.20
8	5	1.28~1.58 0.60~0.91 1.28~1.58	3.62	18.10
9	4	0.98~1.28 0.91~1.21 0.98~1.28	3.32	13.28
9a	—		—	—
9b	—		—	—
10	9	0.98 1.21 0.98	3.17	28.53
10a	—		—	—
10b	—		—	—
11	5	0.60~0.98 1.21 0.60~0.98	2.79	13.95
12	20	0.60 1.21 0.60	2.41	48.20
13	4	0.60~0.90 1.21 0.60~0.90	2.71	10.84
14	3	0.90 1.21 0.90	3.01	9.03
15	5	0.40 1.21 0.40	2.01	10.05
16	3	1.64~2.06 0.66~0.83 1.64~2.06	4.45	13.35
17	5	0.50 0.20	0.70	3.50
18	8	1.40	1.40	11.20
19	3	2.40	2.40	7.20
20	10	0.65 0.20	0.85	8.50
21	4	0.20 1.21 0.20	1.61	6.44
22	2	0.20 0.40 0.25 0.25	1.10	2.20
23	13	0.035 0.035 0.09	0.21	2.73
24	4	0.09 0.23 0.09	0.84	3.36

TOTAL LENGTH 426.66

426.66 x 1.21 = 516.26 Kg

STR. 200—300

Pos.	Nº.	FORM	UNIT LENG.	LENG.
1	7	0.50 3.93 0.50	4.93	34.51
1a	—		—	—
2	7	0.20 7.33	7.53	52.71
3	7	0.35 2.45 0.20	3.00	21.00
4	2x6	0.50 2.42	2.92	35.04
5	2x4	3.60	3.60	28.80
5a	—		—	—
6	2x3	0.20 0.68 7.54	8.42	50.52
7	2x2	0.20 2.90	3.10	12.40
8	5	1.35~1.67 0.60~0.91 1.35~1.67	3.78	18.90
9	4	1.03~1.35 0.91~1.21 1.03~1.35	3.44	13.76
9a	—		—	—
9b	—		—	—
10	10	1.03 1.21 1.03	3.27	32.70
10a	—		—	—
10b	—		—	—
11	5	0.60~1.03 1.21 0.60~1.03	2.84	14.20
12	25	0.60 1.21 0.60	2.41	60.25
13	4	0.60~0.90 1.21 0.60~0.90	2.71	10.84
14	3	0.90 1.21 0.90	3.01	9.03
15	5	0.40 1.21 0.40	2.01	10.05
16	3	1.73~2.16 0.66~0.82 1.73~2.16	4.63	13.89
17	5	0.50 0.20	0.70	3.50
18	8	1.40	1.40	11.20
19	3	2.40	2.40	7.20
20	10	0.65 0.20	0.85	8.50
21	4	0.20 1.21 0.20	1.61	6.44
22	2	0.20 0.40 0.25 0.25	1.10	2.20
23	13	0.035 0.035 0.09	0.21	2.73
24	4	0.09 0.23 0.09	0.84	3.36

TOTAL LENGTH 463.73

463.73 x 1.21 = 561.11 Kg.

ALL BARS ARE Φ14 (1.21 Kg/m)

REFERENCE DWGS: For plan & section see dwg Nº. 11/1/1/01

For reinforcement see dwgs.Nº. 11/1/3/01 TO 11/1/3/03

For bars with variable unit length see note under the same title at dwg Nº 20/2/1/01

Scale:	IRRIGATION & DRAINAGE STANDARDS	
Date:	DWG.Nº. 11/1/3/04	RECTANGULAR INCLINED DROP LIST OF REINFORCEMENT
Approved:	Sheet Nº.8 of 32 Rev.Nº.	STR. 200_100 TO 200_300

ISLAMIC REPUBLIC OF IRAN
MINISTRY OF PLAN & BUDJET
TECHNICAL RESEARCH AND STANDARD BUREAU

omoorepeyman.ir

STR. 200_350

Pos.	No.	FORM	UNIT LENG.	LENG.
1	7	0.50 — 4.03 — 0.50	5.03	35.21
1a	—		—	—
2	7	0.20 — 8.50	8.70	6.90
3	7	0.35 — 2.55 — 0.20	3.10	21.70
4	2x6	0.50 — 2.46	2.96	35.52
5	2x4	3.80	3.80	30.40
5a	—		—	—
6	2x3	0.20 — 0.78 — 8.61	9.59	57.54
7	2x2	0.20 — 3.00	3.20	12.80
8	5	1.42~1.77 — 0.60~0.91 — 1.42~1.77	3.95	19.75
9	4	1.08~1.42 — 0.91~1.21 — 1.08~1.42	3.56	14.24
9a	—		—	—
9b	—		—	—
10	10	1.08 — 1.21 — 1.08	3.37	33.70
10a	—		—	—
10b	—		—	—
11	6	0.60~1.08 — 1.21 — 0.60~1.08	2.89	17.34
12	29	0.60 — 1.21 — 0.60	2.41	69.89
13	4	0.60~0.90 — 1.21 — 0.60~0.90	2.71	10.84
14	4	0.90 — 1.21 — 0.90	3.01	12.04
15	5	0.40 — 1.21 — 0.40	2.01	10.05
16	3	1.83~2.26 — 0.66~0.82 — 1.83~2.26	4.83	14.49
17	5	0.50 — 0.20	0.70	3.50
18	8	1.40	1.40	11.20
19	3	2.40	2.40	7.20
20	10	0.65 — 0.20	0.85	8.50
21	4	0.20 — 1.21 — 0.20	1.61	6.44
22	2	0.20 — 0.40 — 0.25 — 0.25	1.10	2.20
23	13	0.035 — 0.035 — 0.09	0.21	2.73
24	4	0.23 — 0.09 — 0.09	0.84	3.36
		TOTAL LENGTH		501.54

501.54 x 1.21 = 606.86 Kg

STR. 200_400

Pos.	No.	FORM	UNIT LENG.	LENG.
1	7	0.50 — 4.08 — 0.50	5.08	35.56
1a	—		—	—
2	7	0.20 — 9.67	9.87	69.09
3	7	0.35 — 2.65 — 0.20	3.20	22.40
4	2x4	0.50 — 2.46	2.96	35.52
5	2x4	3.85	3.85	30.80
5a	—		—	—
6	2x3	0.20 — 0.88 — 9.78	10.86	65.16
7	2x2	0.20 — 3.10	3.30	13.20
8	5	1.44~1.77 — 0.60~0.91 — 1.44~1.77	3.95	19.75
9	4	1.08~1.42 — 0.91~1.21 — 1.08~1.42	3.56	14.24
9a	—		—	—
9b	—		—	—
10	10	1.08 — 1.21 — 1.08	3.37	33.70
10a	—		—	—
10b	—		—	—
11	6	0.60~1.08 — 1.21 — 0.60~1.08	2.89	17.34
12	34	0.60 — 1.21 — 0.60	2.41	81.94
13	4	0.60~0.90 — 1.21 — 0.60~0.90	2.71	10.84
14	4	0.90 — 1.21 — 0.90	3.01	12.04
15	5	0.40 — 1.21 — 0.40	2.01	10.05
16	3	1.83~2.26 — 0.66~0.82 — 1.83~2.26	4.83	14.49
17	5	0.50 — 0.20	0.70	3.50
18	8	1.40	1.40	11.20
19	3	2.40	2.40	7.20
20	10	0.65 — 0.20	0.85	8.50
21	4	0.20 — 1.21 — 0.20	1.61	6.44
22	2	0.20 — 0.40 — 0.25 — 0.25	1.10	2.20
23	13	0.035 — 0.035 — 0.09	0.21	2.73
24	4	0.23 — 0.09 — 0.09	0.84	3.36
		TOTAL LENGTH		531.25

531.25 x 1.21 = 642.81 Kg

STR. 300_100

Pos.	No.	FORM	UNIT LENG.	LENG.
1	8	0.50 — 3.88 — 0.50	4.88	39.04
1a	—		—	—
2	7	0.20 — 2.35	2.55	17.85
3	7	0.35 — 2.35 — 0.20	2.90	20.30
4	2x5	0.50 — 2.50	3.00	30.00
5	2x4	3.05	3.05	24.40
5a	—		—	—
6	2x3	0.20 — 0.48 — 3.02	3.70	22.20
7	2x2	0.20 — 2.80	3.00	12.00
8	5	1.21~1.48 — 0.60~0.98 — 1.21~1.48	3.48	17.40
9	5	0.93~1.21 — 0.98~1.36 — 0.93~1.21	3.31	16.55
9a	—		—	—
9b	—		—	—
10	9	0.93 — 1.36 — 0.93	3.22	28.98
10a	—		—	—
10b	—		—	—
11	4	0.65~0.93 — 1.36 — 0.65~0.93	2.94	11.76
12	6	0.65 — 1.36 — 0.65	2.66	15.96
13	4	0.65~1.00 — 1.36 — 0.65~1.00	3.01	12.04
14	3	1.00 — 1.36 — 1.00	3.36	10.08
15	5	0.50 — 1.36 — 0.50	2.36	11.80
16	3	1.54~1.96 — 0.66~0.80 — 1.54~1.96	4.23	12.69
17	6	0.50 — 0.20	0.70	4.20
18	8	1.50	1.50	12.00
19	3	2.75	2.75	8.25
20	10	0.75 — 0.20	0.95	9.50
21	4	0.20 — 1.36 — 0.20	1.76	7.04
22	4	0.20 — 0.40 — 0.25 — 0.25	1.10	4.40
23	20	0.035 — 0.035 — 0.09	0.21	4.20
24	6	0.23 — 0.09 — 0.09	0.84	5.04
		TOTAL LENGTH		357.68

357.68 x 1.21 = 432.79 Kg

STR. 300_150

Pos.	No.	FORM	UNIT LENG.	LENG.
1	8	0.50 — 4.08 — 0.50	5.08	40.64
1a	—		—	—
2	7	0.20 — 3.64	3.84	26.88
3	7	0.35 — 2.40 — 0.20	2.95	20.65
4	2x6	0.50 — 2.56	3.06	36.72
5	2x4	3.45	3.45	27.60
5a	—		—	—
6	2x3	0.20 — 0.53 — 4.08	4.81	28.86
7	2x2	0.20 — 2.85	3.05	12.20
8	5	1.35~1.67 — 0.60~0.98 — 1.35~1.67	3.81	19.05
9	5	1.03~1.35 — 0.98~1.36 — 1.03~1.35	3.55	17.75
9a	—		—	—
9b	—		—	—
10	10	1.03 — 1.36 — 1.03	3.42	34.20
10a	—		—	—
10b	—		—	—
11	5	0.65~1.03 — 1.36 — 0.65~1.03	3.04	15.20
12	11	0.65 — 1.36 — 0.65	2.66	29.26
13	4	0.65~1.00 — 1.36 — 0.65~1.00	3.01	12.04
14	3	1.00 — 1.36 — 1.00	3.36	10.08
15	5	0.50 — 1.36 — 0.50	2.36	11.80
16	3	1.73~2.16 — 0.66~0.82 — 1.73~2.16	4.63	13.89
17	6	0.50 — 0.20	0.70	4.20
18	8	1.50	1.50	12.00
19	3	2.75	2.75	8.25
20	10	0.75 — 0.20	0.95	9.50
21	4	0.20 — 1.36 — 0.20	1.76	7.04
22	4	0.20 — 0.40 — 0.25 — 0.25	1.10	4.40
23	20	0.035 — 0.035 — 0.09	0.21	4.20
24	6	0.23 — 0.09 — 0.09	0.84	5.04
		TOTAL LENGTH		411.45

411.45 x 1.21 = 497.85 Kg

STR. 300_200

Pos.	No.	FORM	UNIT LENG.	LENG.
1	8	0.50 — 4.23 — 0.50	5.23	41.84
1a	—		—	—
2	7	0.20 — 4.87	5.07	35.49
3	7	0.35 — 2.45 — 0.20	3.00	21.00
4	2x6	0.50 — 2.60	3.10	37.20
5	2x4	3.70	3.70	29.60
5a	—		—	—
6	2x3	0.20 — 0.58 — 5.20	5.98	35.88
7	2x2	0.20 — 2.90	3.10	12.40
8	5	1.42~1.77 — 0.60~0.98 — 1.42~1.77	3.98	19.90
9	5	1.08~1.42 — 0.98~1.36 — 1.08~1.42	3.67	18.35
9a	—		—	—
9b	—		—	—
10	10	1.08 — 1.36 — 1.08	3.52	35.20
10a	—		—	—
10b	—		—	—
11	5	0.65~1.08 — 1.36 — 0.65~1.08	3.09	15.45
12	15	0.65 — 1.36 — 0.65	2.66	39.90
13	4	0.65~1.00 — 1.36 — 0.65~1.00	3.01	12.04
14	3	1.00 — 1.36 — 1.00	3.36	10.08
15	5	0.50 — 1.36 — 0.50	2.36	11.80
16	3	1.83~2.26 — 0.66~0.82 — 1.83~2.26	4.83	14.49
17	6	0.50 — 0.20	0.70	4.20
18	8	1.50	1.50	12.00
19	3	2.75	2.75	8.25
20	10	0.75 — 0.20	0.95	9.50
21	4	0.20 — 1.36 — 0.20	1.76	7.04
22	4	0.20 — 0.40 — 0.25 — 0.25	1.10	4.40
23	20	0.035 — 0.035 — 0.09	0.21	4.20
24	6	0.23 — 0.09 — 0.09	0.84	5.04
		TOTAL LENGTH		445.25

445.25 x 1.21 = 538.75 Kg

ALL BARS ARE Φ14 (1.21 Kg/m)

REFERENCE DWGS: For plan & section see dwg. No. 11/1/1/01
For reinforcement see dwgs. No. 11/1/3/01 TO 11/1/3/03
For bars with variable unit length see note under the same title at dwg. No. 20/2/1/01

Scale:	IRRIGATION & DRAINAGE STANDARDS	
Date:	DWG.No. 11/1/3/05	RECTANGULAR INCLINED DROP LIST OF REINFORCEMENT
Approved:	Sheet No. 9 of 32 Rev.No.	STR. 200_350 TO 300_200

ISLAMIC REPUBLIC OF IRAN
MINISTRY OF PLAN & BUDJET
TECHNICAL RESEARCH AND STANDARD BUREAU

omoorepeyman.ir

STR. 300_250

Pos.	No.	FORM	UNIT LENG.	LENG.
1	8	0.50 — 4.38 — 0.50	5.38	43.04
1a	—		—	—
2	7	0.20 — 6.10	6.30	44.10
3	7	0.35 — 2.55 — 0.20	3.10	21.70
4	2×6	0.50 — 2.63	3.13	37.56
5	2×5	3.95	3.95	39.50
5a	—		—	—
6	2×3	0.20 — 0.68 — 6.31	7.19	43.14
7	2×2	0.20 — 3.00	3.20	12.80
8	5	1.50 ~ 1.86 — 0.60~0.98 — 1.50 ~ 1.86	4.15	20.75
9	5	1.13 ~ 1.50 — 0.98~1.36 — 1.13 ~ 1.50	3.80	19.00
9a	—		—	—
9b	—		—	—
10	11	1.13 — 1.36 — 1.13	3.62	39.82
10a	—		—	—
10b	—		—	—
11	6	0.65 ~ 1.13 — 1.36 — 0.65 ~ 1.13	3.14	18.84
12	19	0.65 — 1.36 — 0.65	2.66	50.54
13	4	0.65 ~ 1.00 — 1.36 — 0.65 ~ 1.00	3.01	12.04
14	3	1.00 — 1.36 — 1.00	3.36	10.08
15	5	0.50 — 1.36 — 0.50	2.36	11.80
16	3	1.92 ~ 2.36 — 0.66~0.81 — 1.92 ~ 2.36	5.02	15.06
17	6	0.50 — 0.20	0.70	4.20
18	8	1.50	1.50	12.00
19	3	2.75	2.75	8.25
20	10	0.75 — 0.20	0.95	9.50
21	4	0.20 — 1.36 — 0.20	1.76	7.04
22	4	0.20 — 0.40 — 0.25 — 0.25	1.10	4.40
23	20	0.035 — 0.035 — 0.09	0.21	4.20
24	6	0.09 — 0.23 — 0.09	0.84	5.04
		TOTAL LENGTH	494.40	

494.40 × 1.21 = 598.22 Kg

STR. 300_300

Pos.	No.	FORM	UNIT LENG.	LENG.
1	8	0.50 — 4.48 — 0.50	5.48	43.84
1a	—		—	—
2	7	0.20 — 7.33	7.53	52.71
3	7	0.35 — 2.65 — 0.20	3.20	22.40
4	2×6	0.50 — 2.63	3.13	37.56
5	2×5	4.05	4.05	40.50
5a	—		—	—
6	2×3	0.20 — 0.78 — 7.54	8.52	51.12
7	2×2	0.20 — 3.10	3.30	13.20
8	5	1.50 ~ 1.86 — 0.60~0.98 — 1.50 ~ 1.86	4.15	20.75
9	5	1.13 ~ 1.50 — 0.98~1.36 — 1.13 ~ 1.50	3.80	19.00
9a	—		—	—
9b	—		—	—
10	11	1.13 — 1.36 — 1.13	3.62	39.82
10a	—		—	—
10b	—		—	—
11	6	0.65 ~ 1.13 — 1.36 — 0.65 ~ 1.13	3.14	18.84
12	24	0.65 — 1.36 — 0.65	2.66	63.84
13	4	0.65 ~ 1.00 — 1.36 — 0.65 ~ 1.00	3.01	12.04
14	4	1.00 — 1.36 — 1.00	3.36	13.44
15	5	0.50 — 1.36 — 0.50	2.36	11.80
16	3	1.92 ~ 2.36 — 0.66~0.81 — 1.92 ~ 2.36	5.02	15.06
17	6	0.50 — 0.20	0.70	4.20
18	8	1.50	1.50	12.00
19	3	2.75	2.75	8.25
20	10	0.75 — 0.20	0.95	9.50
21	4	0.20 — 1.36 — 0.20	1.76	7.04
22	4	0.20 — 0.40 — 0.25 — 0.25	1.10	4.40
23	20	0.035 — 0.035 — 0.09	0.21	4.20
24	6	0.09 — 0.23 — 0.90	0.84	5.04
		TOTAL LENGTH	530.55	

530.55 × 1.21 = 641.96 Kg

STR. 300_350

Pos.	No.	FORM	UNIT LENG.	LENG.
1	8	0.50 — 4.58 — 0.50	5.58	44.64
1a	—		—	—
2	7	0.20 — 8.50	8.70	60.90
3	7	0.35 — 2.75 — 0.20	3.30	23.10
4	2×7	0.50 — 2.67	3.17	44.38
5	2×5	4.25	4.25	42.50
5a	—		—	—
6	2×3	0.20 — 0.88 — 8.61	9.69	58.14
7	2×2	0.20 — 3.20	3.40	13.60
8	5	1.57 ~ 1.96 — 0.60~0.98 — 1.57 ~ 1.96	4.32	21.60
9	5	1.18 ~ 1.57 — 0.98~1.36 — 1.18 ~ 1.57	3.92	19.60
9a	—		—	—
9b	—		—	—
10	12	1.18 — 1.36 — 1.18	3.72	44.64
10a	—		—	—
10b	—		—	—
11	6	0.65 ~ 1.18 — 1.36 — 0.65 ~ 1.18	3.19	19.14
12	29	0.65 — 1.36 — 0.65	2.66	77.14
13	4	0.65 ~ 1.00 — 1.36 — 0.65 ~ 1.00	3.01	12.04
14	4	1.00 — 1.36 — 1.00	3.36	13.44
15	5	0.50 — 1.36 — 0.50	2.36	11.80
16	3	2.02 ~ 2.46 — 0.66~0.80 — 2.02 ~ 2.46	5.21	15.63
17	6	0.50 — 0.20	0.70	4.20
18	8	1.50	1.50	12.00
19	3	2.75	2.75	8.25
20	10	0.75 — 0.20	0.95	9.50
21	4	0.20 — 1.36 — 0.20	1.76	7.04
22	4	0.20 — 0.40 — 0.25 — 0.25	1.10	4.40
23	20	0.035 — 0.035 — 0.09	0.21	4.20
24	6	0.09 — 0.23 — 0.09	0.84	5.04
		TOTAL LENGTH	576.92	

576.92 × 1.21 = 698.07 Kg

STR. 300_400

Pos.	No.	FORM	UNIT LENG.	LENG.
1	8	0.50 — 4.68 — 0.50	5.68	45.44
1a	—		—	—
2	7	0.20 — 9.67	9.87	69.09
3	7	0.35 — 2.85 — 0.20	3.40	23.80
4	2×7	0.50 — 2.71	3.21	44.94
5	2×5	4.45	4.45	44.50
5a	—		—	—
6	2×3	0.20 — 0.98 — 9.67	10.85	65.10
7	2×2	0.20 — 3.30	3.50	14.00
8	5	1.64 ~ 2.05 — 0.60~0.98 — 1.64 ~ 2.05	4.48	22.40
9	5	1.23 ~ 1.64 — 0.98~1.36 — 1.23 ~ 1.64	4.04	20.20
9a	—		—	—
9b	—		—	—
10	12	1.23 — 1.36 — 1.23	3.82	45.84
10a	—		—	—
10b	—		—	—
11	7	0.65 ~ 1.23 — 1.36 — 0.65 ~ 1.23	3.24	22.68
12	33	0.65 — 1.36 — 0.65	2.66	87.78
13	4	0.65 ~ 1.00 — 1.36 — 0.65 ~ 1.00	3.01	12.04
14	5	1.00 — 1.36 — 1.00	3.36	16.80
15	5	0.50 — 1.36 — 0.50	2.36	11.80
16	3	2.11 ~ 2.50 — 0.66~0.80 — 2.11 ~ 2.55	5.39	16.17
17	6	0.50 — 0.20	0.70	4.20
18	8	1.50	1.50	12.00
19	3	2.75	2.75	8.25
20	10	0.75 — 0.20	0.95	9.50
21	4	0.20 — 1.36 — 0.20	1.76	7.04
22	4	0.20 — 0.40 — 0.25 — 0.25	1.10	4.40
23	20	0.035 — 0.035 — 0.09	0.21	4.20
24	6	0.09 — 0.23 — 0.09	0.84	5.04
		TOTAL LENGTH	617.21	

617.21 × 1.21 = 746.82 Kg

STR. 400_100

Pos.	No.	FORM	UNIT LENG.	LENG.
1	9	0.50 — 4.28 — 0.50	5.28	47.52
1a	—		—	—
2	8	0.20 — 2.35	2.55	20.40
3	8	0.35 — 2.45 — 0.20	3.00	24.00
4	2×5	0.50 — 2.67	3.17	31.70
5	2×4	3.35	3.35	26.80
5a	—		—	—
6	2×3	0.20 — 0.58 — 2.90	3.68	22.08
7	2×2	0.20 — 2.90	3.10	12.40
8	6	1.26 ~ 1.48 — 0.60~1.06 — 1.26 ~ 1.48	3.57	21.42
9	5	1.03 ~ 1.26 — 1.06~1.51 — 1.03 ~ 1.26	3.58	17.90
9a	—		—	—
9b	—		—	—
10	10	1.03 — 1.51 — 1.03	3.57	35.70
10a	—		—	—
10b	—		—	—
11	4	0.70 ~ 1.03 — 1.51 — 0.70 ~ 1.03	3.24	12.96
12	6	0.70 — 1.51 — 0.70	2.91	17.46
13	4	0.70 ~ 1.05 — 1.51 — 0.70 ~ 1.05	3.26	13.04
14	3	1.05 — 1.51 — 1.05	3.61	10.83
15	5	0.55 — 1.51 — 0.55	2.61	13.05
16	3	1.54 ~ 1.96 — 0.66~0.84 — 1.54 ~ 1.96	4.25	12.75
17	7	0.50 — 0.20	0.70	4.90
18	8	1.55	1.55	12.40
19	3	3.00	3.00	9.00
20	10	0.80 — 0.20	1.00	10.00
21	4	0.20 — 1.51 — 0.20	1.91	7.64
22	4	0.20 — 0.40 — 0.25 — 0.25	1.10	4.40
23	20	0.035 — 0.035 — 0.09	0.21	4.20
24	6	0.09 — 0.23 — 0.09	0.84	5.04
		TOTAL LENGTH	397.59	

397.59 × 1.21 = 481.08 Kg

ALL BARS ARE Φ 14 (1.21 Kg/m)

REFERENCE DWGS: For plan & section see dwg. No. 11/1/1/01
For reinforcement see dwgs. No 11/1/1/3/01 TO 11/1/1/3/03
For bars with variable unit length see note under the same title at dwg. No 20/2/1/01

Scale:

Date:

Approved:

IRRIGATION & DRAINAGE STANDARDS

DWG. No. 11/1/3/06

Sheet No. 10 of 32 Rev. No.

RECTANGULAR INCLINED DROP
LIST OF REINFORCEMENT
STR. 300_250 TO 400_100

ISLAMIC REPUBLIC OF IRAN
MINISTRY OF PLAN & BUDJET
TECHNICAL RESEARCH AND STANDARD BUREAU

omoorepeyman.ir

STR. 400_150

Pos.	No.	FORM	UNIT LENG.	LENG.
1	9	0.50 / 4.48 / 0.50	5.48	49.32
1a	—		—	—
2	8	0.20 / 3.64	3.84	30.72
3	8	0.35 / 2.50 / 0.20	3.05	24.40
4	2x5	0.50 / 2.72	3.22	32.20
5	2x4	3.65	3.65	29.20
5a	—		—	—
6	2x3	0.20 / 0.63 / 4.08	4.91	29.46
7	2x2	0.20 / 2.95	3.15	12.60
8	6	1.38 / 1.67 / 0.60~1.06 / 1.38 / 1.67	3.88	23.28
9	5	1.08 / 1.38 / 1.06~1.51 / 1.08 / 1.38	3.75	18.75
9a	—		—	—
9b	—		—	—
10	10	1.08 / 1.51 / 1.08	3.67	36.70
10a	—		—	—
10b	—		—	—
11	5	0.70 / 1.08 / 1.51 / 0.70 / 1.08	3.29	16.45
12	11	0.70 / 1.51 / 0.70	2.91	32.01
13	4	0.70 / 1.05 / 1.51 / 0.70 / 1.05	3.26	13.04
14	3	1.05 / 1.51 / 1.05	3.61	10.83
15	5	0.55 / 1.51 / 0.55	2.61	13.05
16	3	1.73 / 2.16 / 0.66~0.82 / 1.73 / 2.16	4.63	13.89
17	7	0.50 / 0.20	0.70	4.90
18	8	1.55	1.55	12.40
19	3	3.00	3.00	9.00
20	10	0.80 / 0.20	1.00	10.00
21	4	0.20 / 1.51 / 0.20	1.91	7.64
22	4	0.20 / 0.40 / 0.25 / 0.25	1.10	4.40
23	20	0.035 / 0.035 / 0.09	0.21	4.21
24	6	0.09 / 0.23 / 0.23 / 0.09	0.84	5.04
		TOTAL LENGTH		443.48

443.48 x 1.21 = 536.61 Kg

STR. 400_200

Pos.	No.	FORM	UNIT LENG.	LENG.
1	9	0.50 / 4.63 / 0.50	5.63	50.67
1a	—		—	—
2	8	0.20 / 4.87	5.07	40.56
3	8	0.35 / 2.60 / 0.20	3.15	25.20
4	2x6	0.50 / 2.75	3.25	39.00
5	2x5	3.90	3.90	39.00
5a	—		—	—
6	2x3	0.20 / 0.73 / 5.20	6.13	36.78
7	2x2	0.20 / 3.05	3.25	13.00
8	6	1.45 / 1.77 / 0.60~1.06 / 1.45 / 1.77	4.05	24.30
9	5	1.13 / 1.45 / 1.06~1.51 / 1.13 / 1.45	3.87	19.35
9a	—		—	—
9b	—		—	—
10	11	1.13 / 1.51 / 1.13	3.77	41.47
10a	—		—	—
10b	—		—	—
11	5	0.70 / 1.13 / 1.51 / 0.70 / 1.13	3.34	16.70
12	15	0.70 / 1.51 / 0.70	2.91	43.65
13	4	0.70 / 1.05 / 1.51 / 0.70 / 1.05	3.26	13.04
14	4	1.05 / 1.51 / 1.05	3.61	14.44
15	5	0.55 / 1.51 / 0.55	2.61	13.05
16	3	1.83 / 2.26 / 0.66~0.82 / 1.83 / 2.26	4.83	14.49
17	7	0.50 / 0.20	0.70	4.90
18	8	1.55	1.55	12.40
19	3	3.00	3.00	9.00
20	10	0.80 / 0.20	1.00	10.00
21	4	0.20 / 1.51 / 0.20	1.91	7.64
22	4	0.20 / 0.40 / 0.25 / 0.25	1.10	4.40
23	20	0.035 / 0.035 / 0.09	0.21	4.20
24	6	0.09 / 0.23 / 0.23 / 0.09	0.84	5.04
		TOTAL LENGTH		502.28

502.28 x 1.21 = 607.76 Kg

STR. 400_250

Pos.	No.	FORM	UNIT LENG.	LENG.
1	9	0.50 / 4.78 / 0.50	5.78	52.02
1a	—		—	—
2	8	0.20 / 6.10	6.30	50.40
3	8	0.35 / 2.70 / 0.20	3.25	26.00
4	2x6	0.50 / 2.78	3.28	39.36
5	2x5	4.15	4.15	41.50
5a	—		—	—
6	2x3	0.20 / 0.83 / 6.31	7.34	44.04
7	2x2	0.20 / 3.15	3.35	13.40
8	6	1.52 / 1.86 / 0.60~1.06 / 1.52 / 1.86	4.21	25.26
9	5	1.18 / 1.52 / 1.06~1.51 / 1.18 / 1.52	3.99	19.95
9a	—		—	—
9b	—		—	—
10	12	1.18 / 1.51 / 1.18	3.87	46.44
10a	—		—	—
10b	—		—	—
11	6	0.70 / 1.18 / 1.51 / 0.70 / 1.18	3.39	20.34
12	19	0.70 / 1.51 / 0.70	2.91	55.29
13	4	0.70 / 1.05 / 1.51 / 0.70 / 1.05	3.26	13.04
14	4	1.05 / 1.51 / 1.05	3.61	14.44
15	5	0.55 / 1.51 / 0.55	2.61	13.05
16	3	1.92 / 2.36 / 0.66~0.81 / 1.92 / 2.36	5.02	15.06
17	7	0.50 / 0.20	0.70	4.90
18	8	1.55	1.55	12.40
19	3	3.00	3.00	9.00
20	10	0.80 / 0.20	1.00	10.00
21	4	0.20 / 1.51 / 0.20	1.91	7.64
22	4	0.20 / 0.40 / 0.25 / 0.25	1.10	4.40
23	20	0.035 / 0.035 / 0.09	0.21	4.20
24	6	0.09 / 0.23 / 0.23 / 0.09	0.84	5.04
		TOTAL LENGTH		547.17

547.17 x 1.21 = 662.08 Kg

STR. 400_300

Pos.	No.	FORM	UNIT LENG.	LENG.
1	9	0.50 / 4.88 / 0.50	5.88	52.92
1a	—		—	—
2	8	0.20 / 7.33	7.53	60.24
3	8	0.35 / 2.80 / 0.20	3.35	26.80
4	2x6	0.50 / 2.78	3.28	39.36
5	2x5	4.35	4.35	43.50
5a	—		—	—
6	2x3	0.20 / 0.93 / 7.43	8.56	51.36
7	2x2	0.20 / 3.25	3.45	13.80
8	6	1.55 / 1.86 / 0.60~1.06 / 1.55 / 1.86	4.24	25.44
9	5	1.23 / 1.55 / 1.06~1.51 / 1.23 / 1.55	4.07	20.35
9a	—		—	—
9b	—		—	—
10	12	1.23 / 1.51 / 1.23	3.97	47.64
10a	—		—	—
10b	—		—	—
11	6	0.70 / 1.23 / 1.51 / 0.70 / 1.23	3.44	20.64
12	24	0.70 / 1.51 / 0.70	2.91	69.84
13	4	0.70 / 1.05 / 1.51 / 0.70 / 1.05	3.26	13.04
14	4	1.05 / 1.51 / 1.05	3.61	14.44
15	5	0.55 / 1.51 / 0.55	2.61	13.05
16	3	1.92 / 2.36 / 0.66~0.81 / 1.92 / 2.36	5.02	15.06
17	7	0.50 / 0.20	0.70	4.90
18	8	1.55	1.55	12.40
19	3	3.00	3.00	9.00
20	10	0.80 / 0.20	1.00	10.00
21	4	0.20 / 1.51 / 0.20	1.91	7.64
22	4	0.20 / 0.40 / 0.25 / 0.25	1.10	4.40
23	20	0.035 / 0.035 / 0.09	0.21	4.20
24	6	0.09 / 0.23 / 0.23 / 0.09	0.84	5.04
		TOTAL LENGTH		585.06

585.06 x 1.21 = 707.93 Kg

STR. 400_350

Pos.	No.	FORM	UNIT LENG.	LENG.
1	9	0.50 / 4.98 / 0.50	5.98	53.82
1a	—		—	—
2	8	0.20 / 8.50	8.70	69.60
3	8	0.35 / 2.90 / 0.20	3.45	27.60
4	2x6	0.50 / 2.81	3.31	39.72
5	2x5	4.55	4.55	45.50
5a	—		—	—
6	2x3	0.20 / 1.03 / 8.49	9.72	58.32
7	2x2	0.20 / 3.35	3.55	14.20
8	6	1.62 / 1.96 / 0.60~1.06 / 1.62 / 1.96	4.41	26.46
9	5	1.28 / 1.62 / 1.06~1.51 / 1.28 / 1.62	4.91	20.95
9a	—		—	—
9b	—		—	—
10	13	1.28 / 1.51 / 1.28	4.07	52.91
10a	—		—	—
10b	—		—	—
11	7	0.70 / 1.28 / 1.51 / 0.70 / 1.28	3.49	24.43
12	28	0.70 / 1.51 / 0.70	2.91	81.48
13	4	0.70 / 1.05 / 1.51 / 0.70 / 1.05	3.26	13.04
14	5	1.05 / 1.51 / 1.05	3.61	18.05
15	5	0.55 / 1.51 / 0.55	2.61	13.05
16	3	2.02 / 2.46 / 0.66~0.80 / 2.02 / 2.46	5.21	15.63
17	7	0.50 / 0.20	0.70	4.90
18	8	1.55	1.55	12.40
19	3	3.00	3.00	9.00
20	10	0.80 / 0.20	1.00	10.00
21	4	0.20 / 1.51 / 0.20	1.91	7.64
22	4	0.20 / 0.40 / 0.25 / 0.25	1.10	4.40
23	20	0.035 / 0.035 / 0.09	0.21	4.20
24	6	0.09 / 0.23 / 0.23 / 0.09	0.84	5.04
		TOTAL LENGTH		632.34

632.34 x 1.21 = 765.13 Kg

ALL BARS ARE Φ 14 (1.21 Kg/m)

REFERENCE DWGS: For plan & sec... see dwg. No. 11/1/1/01
For reinforcem... see dwgs. No. 11/1/3/01 TO 11/1/3/03
For bars with ...able unit length see note under the same title at dwg.No. 20/2/1/01

Scale:
Date:
Approved:

IRRIGATION & DRAINAGE STANDARDS

DWG No. 11/1/3/07
Sheet No. 11 of 32 Rev. No.

RECTANGULAR INCLINED DROP
LIST OF REINFORCEMENT
STR. 400_150 TO 400_350

ISLAMIC REPUBLIC OF IRAN
MINISTRY OF PLAN & BUDJET
TECHNICAL RESEARCH AND STANDARD BUREAU

omoorepeyman.ir

STR. 400–400

Pos.	No.	FORM	UNIT LENG.	LENG.
1	9	0.50 / 5.08 / 0.50	6.08	54.72
1a	—		—	—
2	8	0.20 / 9.67	9.87	78.96
3	8	0.35 / 3.00 / 0.20	3.55	28.40
4	2x7	0.50 / 2.84	3.34	46.76
5	2x5	4.65	4.65	46.50
5a	—		—	—
6	2x3	0.20 / 1.13 / 9.67	1.10	6600
7	2x2	0.20 / 3.45	3.65	14.60
8	6	1.67 ~ 2.05 / 0.60 ~ 1.06 / 1.67 ~ 2.05	4.55	27.30
9	5	1.28 ~ 1.67 / 1.06 ~ 1.51 / 1.28 ~ 1.67	4.24	21.20
9a	—		—	—
9b	—		—	—
10	14	1.28 / 1.51 / 1.28	4.07	56.98
10a	—		—	—
10b	—		—	—
11	7	0.70 ~ 1.28 / 1.51 / 0.70 ~ 1.28	3.49	24.43
12	33	0.70 / 1.51 / 0.70	2.91	96.03
13	4	0.70 ~ 1.05 / 1.51 / 0.70 ~ 1.05	3.26	13.04
14	5	1.05 / 1.51 / 1.05	3.61	18.05
15	5	0.55 / 1.51 / 0.55	2.61	13.05
16	3	2.11 ~ 2.55 / 0.66 ~ 0.80 / 2.11 ~ 2.55	5.39	16.17
17	7	0.50 / 0.20	0.70	4.90
18	8	1.55	1.55	12.40
19	3	3.00	3.00	9.00
20	10	0.80 / 0.20	1.00	10.00
21	4	0.20 / 1.51 / 0.20	1.91	7.64
22	4	0.20 / 0.40 / 0.25 / 0.25	1.10	4.40
23	20	0.035 / 0.035 / 0.09	0.21	4.20
24	6	0.09 / 0.23 / 0.09	0.84	5.04
		TOTAL LENGTH		679.77

679.77 x 1.21 = 822.52Kg

STR. 500–100

Pos.	No.	FORM	UNIT LENG.	LENG.
1	9	0.50 / 4.68 / 0.50	5.68	51.12
1a	—		—	—
2	8	0.20 / 2.35	2.55	20.40
3	8	0.35 / 2.85 / 0.20	3.40	27.20
4	2x5	0.50 / 2.86	3.36	33.60
5	2x4	3.55	3.55	28.40
5a	—		—	—
6	2x3	0.20 / 0.68 / 2.90	3.78	22.68
7	2x3	0.20 / 3.30	3.50	21.00
8	6	1.33 ~ 1.58 / 0.60 ~ 1.11 / 1.33 ~ 1.58	3.77	22.62
9	6	1.08 ~ 1.33 / 1.11 ~ 1.61 / 1.08 ~ 1.33	3.77	22.62
9a	—		—	—
9b	—		—	—
10	10	1.08 / 1.61 / 1.08	3.77	37.70
10a	—		—	—
10b	—		—	—
11	4	0.75 ~ 1.08 / 1.61 / 0.75 ~ 1.08	3.44	13.76
12	6	0.75 / 1.61 / 0.75	3.11	18.66
13	4	0.75 ~ 1.10 / 1.61 / 0.75 ~ 1.10	3.46	13.84
14	3	1.10 / 1.61 / 1.10	3.81	11.43
15	6	0.60 / 1.61 / 0.60	2.81	16.86
16	3	1.64 ~ 2.06 / 0.66 ~ 0.83 / 1.64 ~ 2.06	4.45	13.35
17	7	0.50 / 0.20	0.70	4.90
18	10	1.60	1.60	16.00
19	3	3.20	3.20	9.60
20	12	0.85 / 0.20	1.05	12.60
21	4	0.20 / 1.61 / 0.20	2.01	8.04
22	4	0.20 / 0.40 / 0.25 / 0.25	1.10	4.40
23	20	0.035 / 0.035 / 0.09	0.21	4.20
24	6	0.09 / 0.23 / 0.09	0.84	5.04
		TOTAL LENGTH		440.02

440.02 x 1.21 = 532.42 Kg

STR. 500–150

Pos.	No.	FORM	UNIT LENG.	LENG.
1	9	0.50 / 4.88 / 0.50	5.88	52.92
1a	—		—	—
2	8	0.20 / 3.64	3.84	30.72
3	8	0.35 / 2.90 / 0.20	3.45	27.60
4	2x5	0.50 / 2.91	3.41	34.10
5	2x5	3.95	3.95	39.50
5a	—		—	—
6	2x3	0.20 / 0.73 / 3.97	4.90	29.40
7	2x3	0.20 / 3.35	3.35	21.30
8	6	1.47 ~ 1.77 / 0.60 ~ 1.11 / 1.47 ~ 1.77	4.10	24.60
9	6	1.18 ~ 1.47 / 1.11 ~ 1.61 / 1.18 ~ 1.47	4.01	24.06
9a	—		—	—
9b	—		—	—
10	11	1.18 / 1.61 / 1.18	3.77	41.47
10a	—		—	—
10b	—		—	—
11	5	0.75 ~ 1.18 / 1.61 / 0.75 ~ 1.18	3.54	17.70
12	10	0.75 / 1.61 / 0.75	3.11	31.10
13	4	0.75 ~ 1.10 / 1.61 / 0.75 ~ 1.10	3.46	13.84
14	4	1.10 / 1.61 / 1.10	3.81	15.24
15	6	0.60 / 1.61 / 0.60	2.81	16.86
16	3	1.83 ~ 2.26 / 0.66 ~ 0.82 / 1.83 ~ 2.26	4.83	14.49
17	7	0.50 / 0.20	0.70	4.90
18	10	1.60	1.60	16.00
19	3	3.20	3.20	9.60
20	12	0.85 / 0.20	1.05	12.60
21	4	0.20 / 1.61 / 0.20	2.01	8.04
22	4	0.20 / 0.40 / 0.25 / 0.25	1.10	4.40
23	20	0.035 / 0.035 / 0.09	0.21	4.20
24	6	0.09 / 0.23 / 0.09	0.84	5.04
		TOTAL LENGTH		499.68

499.68 x 1.21 = 604.61 Kg

STR. 500–200

Pos.	No.	FORM	UNIT LENG.	LENG.
1	9	0.50 / 5.03 / 0.50	6.03	54.27
1a	—		—	—
2	8	0.20 / 4.87	5.07	40.56
3	8	0.35 / 3.00 / 0.20	3.55	28.40
4	2x6	0.50 / 2.94	3.44	41.28
5	2x5	4.20	4.20	42.00
5a	—		—	—
6	2x3	0.20 / 0.83 / 5.08	6.11	36.66
7	2x3	0.20 / 3.45	3.65	21.90
8	6	1.55 ~ 1.86 / 0.60 ~ 1.11 / 1.55 ~ 1.86	4.27	25.62
9	6	1.23 ~ 1.55 / 1.11 ~ 1.61 / 1.23 ~ 1.55	4.14	24.84
9a	—		—	—
9b	—		—	—
10	12	1.23 / 1.61 / 1.23	4.07	48.84
10a	—		—	—
10b	—		—	—
11	6	0.75 ~ 1.23 / 1.61 / 0.75 ~ 1.23	3.59	21.54
12	15	0.75 / 1.61 / 0.75	3.11	46.65
13	4	0.75 ~ 1.10 / 1.61 / 0.75 ~ 1.10	3.46	13.84
14	4	1.10 / 1.61 / 1.10	3.81	15.24
15	6	0.60 / 1.61 / 0.60	2.81	16.86
16	3	1.92 ~ 2.36 / 0.66 ~ 0.81 / 1.92 ~ 2.36	5.02	15.06
17	7	0.50 / 0.20	0.70	4.90
18	10	1.60	1.60	16.00
19	3	3.20	3.20	9.60
20	12	0.85 / 0.20	1.05	12.60
21	4	0.20 / 1.61 / 0.20	2.01	8.04
22	4	0.20 / 0.40 / 0.25 / 0.25	1.10	4.40
23	20	0.035 / 0.035 / 0.09	0.21	4.20
24	6	0.09 / 0.23 / 0.09	0.84	5.04
		TOTAL LENGTH		558.34

558.34 x 1.21 = 675.59 Kg

STR. 500–250

Pos.	No.	FORM	UNIT LENG.	LENG.
1	9	0.50 / 5.23 / 0.50	6.23	56.07
1a	—		—	—
2	8	0.20 / 6.10	6.30	50.40
3	8	0.35 / 3.10 / 0.20	3.65	29.20
4	2x6	0.50 / 2.97	3.47	41.64
5	2x5	4.50	4.50	45.00
5a	—		—	—
6	2x3	0.20 / 0.93 / 6.20	7.33	43.98
7	2x3	0.20 / 3.55	3.75	22.50
8	6	1.62 ~ 1.96 / 0.60 ~ 1.11 / 1.62 ~ 1.96	4.44	26.64
9	6	1.23 ~ 1.55 / 1.11 ~ 1.61 / 1.23 ~ 1.55	4.14	24.84
9a	—		—	—
9b	—		—	—
10	13	1.28 / 1.61 / 1.28	4.17	54.21
10a	—		—	—
10b	—		—	—
11	6	0.75 ~ 1.28 / 1.61 / 0.75 ~ 1.28	3.64	21.84
12	19	0.75 / 1.61 / 0.75	3.11	59.09
13	4	0.75 ~ 1.10 / 1.61 / 0.75 ~ 1.10	3.46	13.84
14	4	1.10 / 1.61 / 1.10	3.81	15.24
15	6	0.60 / 1.61 / 0.60	2.81	16.86
16	3	2.02 ~ 2.46 / 0.66 ~ 0.80 / 2.02 ~ 2.46	5.21	15.63
17	7	0.50 / 0.20	0.70	4.90
18	10	1.60	1.60	16.00
19	3	3.20	3.20	9.60
20	12	0.85 / 0.20	1.05	12.60
21	4	0.20 / 1.61 / 0.20	2.01	8.04
22	4	0.20 / 0.40 / 0.25 / 0.25	1.10	4.40
23	20	0.035 / 0.035 / 0.09	0.21	4.20
24	6	0.09 / 0.23 / 0.09	0.84	5.04
		TOTAL LENGTH		601.76

601.76 x 1.21 = 728.13Kg

ALL BARS ARE Φ 14 (1.21 Kg / m)

REFERENCE DWGS: For plan & section see dwg. No. 11/1/1/01
For reinforcement see dwgs. No. 11/1/3/01 TO 11/1/3/03
For bars with variable unit length see note under the same title dwg. No. 20/2/1/01

Scale:	IRRIGATION & DRAINAGE STANDARDS	
Date:	DWG No. 11/1/3/08	RECTANGULAR INCLINED DROP LIST OF REINFORCEMENT
Approved:	Sheet No. 12 of 32 Rev. No.	STR. 400–400 TO 500–250

ISLAMIC REPUBLIC OF IRAN
MINISTRY OF PLAN & BUDJET
TECHNICAL RESEARCH AND STANDARD BUREAU

@omoorepeyman.ir

STR. 500_300

Pos.	No.	FORM	UNIT LENG.	LENG.
1	9	0.50 5.33 0.50	6.33	56.97
1a	—		—	—
2	8	0.20 7.33	7.53	60.24
3	8	0.35 3.20 0.20	3.75	30.00
4	2x7	0.50 3.00	3.50	49.00
5	2x5	4.70	4.70	47.00
5a	—		—	—
6	2x3	0.20 1.03 7.32	8.55	51.30
7	2x3	0.20 3.65	3.85	23.10
8	6	1.69 ~ 2.05 0.60~1.11 1.69 ~ 2.05	4.60	27.60
9	6	1.33 ~ 1.69 1.11 ~ 1.61 1.33 ~ 1.69	4.38	26.28
9a	—		—	—
9b	—		—	—
10	13	1.33 1.61 1.33	4.27	55.51
10a	—		—	—
10b	—		—	—
11	7	0.75 ~ 1.33 1.61 0.75 ~ 1.33	3.69	25.83
12	24	0.75 1.61 0.75	3.11	74.64
13	4	0.75 ~ 1.10 1.61 0.75 ~ 1.10	3.46	13.84
14	5	1.10 1.61 1.10	3.81	19.05
15	6	0.60 1.61 0.60	2.81	16.86
16	3	2.11 ~ 2.55 0.66~0.80 2.11 ~ 2.55	5.39	16.17
17	7	0.50 0.20	0.70	4.90
18	10	1.60	1.60	16.00
19	3	3.20	3.20	9.60
20	12	0.85 0.20	1.05	12.60
21	4	0.20 1.61 0.20	2.01	8.04
22	4	0.20 0.40 0.25 0.25	1.10	4.40
23	20	0.035 0.035 0.09	0.21	4.20
24	6	0.15 0.28 0.28 0.15	1.06	6.36
		TOTAL LENGTH		659.49

659.49 x 1.21 = 797.98Kg.

STR. 500_350

Pos.	No.	FORM	UNIT LENG.	LENG.
1	9	0.50 5.43 0.50	6.43	57.87
1a	—		—	—
2	8	0.20 8.50	8.70	69.60
3	8	0.35 3.35 0.20	3.90	31.20
4	2x7	0.50 3.00	3.50	49.00
5	2x5	4.80	4.80	48.00
5a	—		—	—
6	2x3	0.20 1.18 8.49	9.81	59.22
7	2x3	0.20 3.80	4.00	24.00
8	6	1.69 ~ 2.05 0.60~1.11 1.69 ~ 2.05	4.60	27.60
9	6	1.33 ~ 1.69 1.61~1.11 1.33 ~ 1.69	4.38	26.28
9a	—		—	—
9b	—		—	—
10	14	1.33 1.61 1.33	4.27	59.78
10a	—		—	—
10b	—		—	—
11	7	0.75 ~ 1.33 1.61 0.75 ~ 1.33	3.69	25.83
12	28	0.75 1.61 0.75	3.11	87.08
13	4	0.75 ~ 1.10 1.61 0.75 ~ 1.10	3.46	13.84
14	5	1.10 1.61 1.10	3.81	19.05
15	6	0.60 1.61 0.60	2.81	16.86
16	3	2.11 ~ 2.55 0.66~0.80 2.11 ~ 2.55	5.39	16.17
17	7	0.50 0.20	0.70	4.90
18	10	1.60	1.60	16.00
19	3	3.20	3.20	9.60
20	12	0.85 0.20	1.05	12.60
21	4	0.20 1.61 0.20	2.01	8.04
22	4	0.20 0.40 0.25 0.25	1.10	4.40
23	20	0.035 0.035 0.09	0.21	4.20
24	6	0.15 0.28 0.28 0.15	1.06	6.36
		TOTAL LENGTH		697.48

697.48 x 1.21 = 843.95Kg.

STR. 500_400

Pos.	No.	FORM	UNIT LENG.	LENG.
1	9	0.50 5.53 0.50	6.53	58.77
1a	—		—	—
2	8	0.20 9.67	9.87	78.96
3	8	0.35 3.50 0.20	4.05	32.40
4	2x7	0.50 3.03	3.53	49.42
5	2x6	4.90	4.90	58.80
5a	—		—	—
6	2x3	0.20 1.33 9.67	11.20	67.20
7	2x3	0.20 3.95	4.15	24.90
8	6	1.76 ~ 2.15 0.60~1.11 1.76 ~ 2.15	4.77	28.62
9	6	1.38 ~ 1.76 1.11 ~ 1.61 1.38 ~ 1.76	4.50	27.00
9a	—		—	—
9b	—		—	—
10	14	1.38 1.61 1.38	4.37	61.18
10a	—		—	—
10b	—		—	—
11	7	0.75 ~ 1.38 1.61 0.75 ~ 1.38	3.74	26.18
12	32	0.75 1.61 0.75	3.11	99.52
13	4	0.75 ~ 1.10 1.61 0.75 ~ 1.10	3.64	13.84
14	6	1.10 1.61 1.10	3.81	22.86
15	6	0.60 1.61 0.60	2.81	16.86
16	3	2.21 ~ 2.65 0.56~0.79 2.21 ~ 2.65	5.59	16.77
17	7	0.50 0.20	0.70	4.90
18	10	1.60	1.60	16.00
19	3	3.20	3.20	9.60
20	12	0.85 0.20	1.05	12.60
21	4	0.20 1.61 0.20	2.01	8.04
22	4	0.20 0.40 0.25 0.25	1.10	4.40
23	20	0.035 0.035 0.09	0.21	4.20
24	6	0.15 0.28 0.28 0.15	1.06	6.36
		TOTAL LENGTH		749.38

749.38 x 1.21 = 906.75Kg.

STR. 600_100

Pos.	No.	FORM	UNIT LENG.	LENG.
1	10	0.50 4.93 0.50	5.93	59.30
1a	—		—	—
2	9	0.20 2.35	2.55	22.95
3	9	0.35 2.90 0.20	3.45	31.05
4	2x5	0.50 2.97	3.47	34.70
5	2x5	3.70	3.70	37.00
5a	—		—	—
6	2x4	0.20 0.73 2.90	3.83	30.64
7	2x3	0.20 3.35	3.55	21.30
8	6	1.40 ~ 1.67 0.60~1.16 1.40 ~ 1.67	3.95	23.70
9	6	1.13 ~ 1.40 1.16~1.71 1.13 ~ 1.40	3.97	23.82
9a	—		—	—
9b	—		—	—
10	11	1.13 1.71 1.13	3.97	43.67
10a	—		—	—
10b	—		—	—
11	4	0.80 ~ 1.13 1.71 0.80 ~ 1.13	3.64	14.56
12	6	0.80 1.71 0.80	3.31	19.86
13	4	0.80 ~ 1.15 1.71 0.80 ~ 1.15	3.66	14.64
14	4	1.15 1.71 1.15	4.01	16.04
15	6	0.65 1.71 0.65	3.01	18.06
16	3	1.73 ~ 2.16 0.66~0.82 1.73 ~ 2.16	4.63	13.89
17	7	0.50 0.20	0.70	4.90
18	10	1.65	1.65	16.50
19	3	3.40	3.40	10.20
20	12	0.90 0.20	1.10	13.20
21	4	0.20 1.71 0.20	2.11	8.44
22	4	0.20 0.40 0.25 0.25	1.10	4.40
23	20	0.035 0.035 0.09	0.21	4.20
24	6	0.09 0.23 0.23 0.09	0.84	5.04
		TOTAL LENGTH		492.06

492.06 x 1.21 = 595.39Kg.

STR. 600_150

Pos.	No.	FORM	UNIT LENG.	LENG.
1	10	0.50 5.13 0.50	6.13	61.30
1a	—		—	—
2	9	0.20 3.64	3.84	34.56
3	9	0.35 3.00 0.20	3.55	31.95
4	2x6	0.50 3.02	3.52	42.24
5	2x5	4.10	4.10	41.00
5a	—		—	—
6	2x4	0.20 0.83 3.97	5.00	40.00
7	2x3	0.20 3.45	3.65	21.90
8	6	1.55 ~ 1.86 0.60 ~ 1.16 1.55 ~ 1.86	4.29	25.74
9	6	1.23 ~ 1.55 1.16 ~ 1.71 1.23 ~ 1.55	4.22	25.32
9a	—		—	—
9b	—		—	—
10	12	1.23 1.71 1.23	4.17	50.04
10a	—		—	—
10b	—		—	—
11	5	0.80 ~ 1.23 1.71 0.80 ~ 1.23	3.74	18.70
12	10	0.80 1.71 0.80	3.31	33.10
13	4	0.80 ~ 1.15 1.71 0.80 ~ 1.15	3.66	14.64
14	4	1.15 1.71 1.15	4.01	16.04
15	6	0.65 1.71 0.65	3.01	18.06
16	3	1.92 ~ 2.36 0.65~0.81 1.92 ~ 2.36	5.02	15.06
17	7	0.50 0.20	0.70	4.90
18	10	1.65	1.65	16.50
19	3	3.40	3.40	10.20
20	12	0.90 0.20	1.10	13.20
21	4	0.20 1.71 0.20	2.11	8.44
22	4	0.20 0.40 0.25 0.25	1.10	4.40
23	20	0.035 0.035 0.09	0.21	4.20
24	6	0.09 0.23 0.23 0.09	0.84	5.04
		TOTAL LENGTH		556.53

556.53 x 1.21 = 673.40Kg.

ALL BARS ARE Φ 14 (1.21 Kg/m)

REFERENCE DWGS: For plan & section see dwg.No. 11/1/1/01
For reinforcement see dwgs.No. 11/1/3/01 TO 11/1/3/03
For bars with variable unit length see note under the same title at dwg.No. 20/2/1/01

Scale:
Date:
Approved:

IRRIGATION & DRAINAGE STANDARDS

DWG.No. 11/1/3/09
Sheet No.13of32 Rev.No.

RECTANGULAR INCLINED DROP
LIST OF REINFORCEMENT
STR. 500_300 TO 600_150

ISLAMIC REPUBLIC OF IRAN
MINISTRY OF PLAN & BUDJET
TECHNICAL RESEARCH AND STANDARD BUREAU

omoorepeyman.ir

STR. 600_200

Pos.	No.	FORM	UNIT LENG.	LENG.
1	10	0.50 5.33 0.50	6.33	63.30
1a	—		—	—
2	9	20 4.87	5.07	45.63
3	9	0.35 3.10 0.20	3.65	32.85
4	2x6	0.50 3.04	3.54	42.48
5	2x5	4.40	4.40	44.00
5a	—		—	—
6	2x4	0.20 0.93 5.08	6.21	49.68
7	2x3	0.20 3.55	3.75	22.50
8	6	1.62~1.96 1.16~0.60 1.62~1.96	4.46	26.76
9	6	1.28~1.62 1.71~1.16 1.28~1.62	4.34	26.04
9a	—		—	—
9b	—		—	—
10	13	1.28 1.71 1.28	4.27	55.51
10a	—		—	—
10b	—		—	—
11	6	0.80~1.28 1.71 0.80~1.28	3.79	22.74
12	15	0.80 1.71 0.80	3.31	49.65
13	4	0.80~1.15 1.71 0.80~1.15	3.66	14.64
14	4	1.15 1.71 1.15	4.01	16.04
15	6	0.65 1.71 0.65	3.01	18.06
16	3	2.02~2.46 0.80~0.66 2.02~2.46	5.21	15.63
17	7	0.50 0.20	0.70	4.90
18	10	1.65	1.65	16.50
19	3	3.40	3.40	10.20
20	12	0.90 0.20	1.10	13.20
21	4	0.20 1.71 0.20	2.11	8.44
22	4	0.20 0.40 0.25 0.25	1.10	4.40
23	20	0.035 0.035 0.09	0.21	4.20
24	6	0.23 0.09 0.10 0.09	0.84	5.04
		TOTAL LENGTH	612.39	

612.39 x 1.21 = 740.99 Kg

STR. 600_250

Pos.	No.	FORM	UNIT LENG.	LENG.
1	10	0.50 5.48 0.50	6.48	64.80
1a	—		—	—
2	9	0.20 6.10	6.30	56.70
3	9	0.35 3.20 0.20	3.75	33.75
4	2x6	0.50 3.07	3.57	42.84
5	2x5	4.65	4.65	46.50
5a	—		—	—
6	2x4	0.20 1.30 6.20	7.43	59.44
7	2x3	0.20 3.65	3.85	23.10
8	6	1.69~2.05 1.16~0.60 1.69~2.05	4.62	27.72
9	6	1.33~1.69 1.71~1.16 1.33~1.69	4.46	26.76
9a	—		—	—
9b	—		—	—
10	14	1.33 1.71 1.33	4.37	61.18
10a	—		—	—
10b	—		—	—
11	6	0.80~1.33 1.71 0.80~1.33	3.84	23.04
12	19	0.80 1.71 0.80	3.31	62.89
13	4	0.80~1.15 1.71 0.80~1.15	3.66	14.64
14	5	1.15 1.71 1.15	4.01	20.05
15	6	0.65 1.71 0.65	3.01	18.06
16	3	2.11~2.55 0.80~0.66 2.11~2.55	5.39	16.17
17	7	0.50 0.20	0.70	4.90
18	10	1.65	1.65	16.50
19	3	3.40	3.40	10.20
20	12	0.90 0.20	1.10	13.20
21	4	0.20 1.71 0.20	2.11	8.44
22	4	0.20 0.40 0.25 0.25	1.10	4.40
23	20	0.035 0.035 0.09	0.21	4.20
24	6	0.28 0.15 0.10 0.15	1.06	6.36
		TOTAL LENGTH	665.84	

665.84 x 1.21 = 805.67 Kg

STR. 600_300

Pos.	No.	FORM	UNIT LENG.	LENG.
1	10	0.50 5.63 0.50	6.63	66.30
1a	—		—	—
2	9	0.20 7.33	7.53	67.77
3	9	0.35 3.35 0.20	3.90	35.10
4	2x6	0.50 3.07	3.57	42.84
5	2x6	4.90	4.90	58.80
5a	—		—	—
6	2x4	0.20 1.16 7.32	8.70	69.60
7	2x3	0.20 3.80	4.00	24.00
8	6	1.72~2.05 1.16~0.60 1.72~2.05	4.65	27.90
9	6	1.38~1.72 1.71~1.16 1.38~1.72	4.54	27.24
9a	—		—	—
9b	—		—	—
10	14	1.38 1.71 1.38	4.47	62.58
10a	—		—	—
10b	—		—	—
11	7	0.80~1.38 1.71 0.80~1.38	3.89	27.23
12	24	0.80 1.71 0.80	3.31	79.44
13	4	0.80~1.15 1.71 0.80~1.15	3.66	14.64
14	5	1.15 1.71 1.15	4.01	20.05
15	6	0.65 1.71 0.65	3.01	18.06
16	3	2.11~2.55 0.80~0.66 2.11~2.55	5.39	16.17
17	7	0.50 0.20	0.70	4.90
18	10	1.65	1.65	16.50
19	3	3.40	3.40	10.20
20	12	0.90 0.20	1.10	13.20
21	4	0.20 1.71 0.20	2.11	8.44
22	4	0.20 0.40 0.25 0.25	1.10	4.40
23	20	0.035 0.035 0.09	0.21	4.20
24	6	0.28 0.15 0.10 0.15	1.06	6.36
		TOTAL LENGTH	725.92	

725.92 x 1.21 = 878.36 Kg

STR. 600_350

Pos.	No.	FORM	UNIT LENG.	LENG.
1	10	0.50 5.73 0.50	6.73	67.30
1a	—		—	—
2	9	0.20 8.50	8.70	78.30
3	9	0.35 3.50 0.20	4.05	36.45
4	2x7	0.50 3.10	3.60	50.40
5	2x6	5.10	5.10	61.20
5a	—		—	—
6	2x4	0.20 1.33 8.38	9.91	79.28
7	2x3	0.20 3.95	4.15	24.90
8	6	1.79~2.15 1.16~0.60 1.79~2.15	4.82	28.92
9	6	1.43~1.79 1.71~1.16 1.43~1.79	4.66	27.96
9a	—		—	—
9b	—		—	—
10	15	1.43 1.71 1.43	4.57	68.55
10a	—		—	—
10b	—		—	—
11	7	0.80~1.43 1.71 0.80~1.43	3.94	27.58
12	28	0.80 1.71 0.80	3.31	92.68
13	4	0.80~1.15 1.71 0.80~1.15	3.66	14.64
14	6	1.15 1.71 1.15	4.01	24.06
15	6	0.65 1.71 0.65	3.01	18.06
16	3	2.21~2.65 0.79~0.66 2.21~2.65	5.59	16.77
17	7	0.50 0.20	0.70	4.90
18	10	1.65	1.65	16.50
19	3	3.40	3.40	10.20
20	12	0.90 0.20	1.10	13.20
21	4	0.20 1.71 0.20	2.11	8.44
22	4	0.20 0.40 0.25 0.25	1.10	4.40
23	20	0.035 0.035 0.09	0.21	4.20
24	6	0.28 0.15 0.10 0.15	1.06	6.36
		TOTAL LENGTH	785.25	

785.25 x 1.21 = 950.15 Kg

STR. 600_400

Pos.	No.	FORM	UNIT LENG.	LENG.
1	10	0.50 5.83 0.50	6.83	68.30
1a	—		—	—
2	9	0.20 9.67	9.87	88.83
3	9	0.35 3.60 0.20	4.15	37.35
4	2x7	0.50 3.10	3.60	50.40
5	2x6	5.20	5.20	62.40
5a	—		—	—
6	2x4	0.20 1.43 8.56	11.19	89.52
7	2x3	0.20 4.05	4.25	25.50
8	6	1.79~2.15 1.16~0.60 1.79~2.15	4.82	28.92
9	6	1.43~1.79 1.71~1.16 1.43~1.79	4.66	27.96
9a	—		—	—
9b	—		—	—
10	15	1.43 1.71 1.43	4.57	73.12
10a	—		—	—
10b	—		—	—
11	7	0.80~1.43 1.71 0.80~1.43	3.94	27.58
12	32	0.80 1.71 0.80	3.31	105.92
13	4	0.80~1.15 1.71 0.80~1.15	3.66	14.64
14	6	1.15 1.71 1.15	4.01	24.06
15	6	0.65 1.71 0.65	3.01	18.06
16	3	2.21~2.65 0.79~0.66 2.21~2.65	5.59	16.77
17	7	0.50 0.20	0.70	4.90
18	10	1.65	1.65	16.50
19	3	3.40	3.40	10.20
20	12	0.90 0.20	1.10	13.20
21	4	0.20 1.71 0.20	2.11	8.44
22	4	0.20 0.40 0.25 0.25	1.10	4.40
23	20	0.035 0.035 0.09	0.21	4.20
24	6	0.28 0.15 0.10 0.15	1.06	6.36
		TOTAL LENGTH	827.53	

827.53 x 1.21 = 1001.31 Kg

ALL BARS ARE Φ 14 (1.21 Kg/m)

REFERENCE DWGS: For plan & section see dwg.No 11/1/1/01

For reinforcement see dwgs.No. 11/1/3/01 TO 11/1/3/03

For bars with variable unit length see note under the same title at dwg.No 20/2/1/01

Scale:

Date:

Approved:

IRRIGATION & DRAINAGE STANDARDS

DWG.No. 11/1/3/10

Sheet No.14 of 32 Rev.No.

RECTANGULAR INCLINED DROP
LIST OF REINFORCEMENT
STR. 600_200 TO 600_400

ISLAMIC REPUBLIC OF IRAN
MINISTRY OF PLAN & BUDJE
TECHNICAL RESEARCH AND STANDARD BUREAU

omoorepeyman.ir

STR. 700—100

Pos.	No.	FORM	UNIT LENG.	LENG.
1	10	0.50 / 5.13 / 0.50	6.13	61.30
1a	—		—	—
2	9	0.20 / 2.35	2.55	22.95
3	9	0.35 / 2.95 / 0.20	3.50	31.50
4	2x5	0.50 / 3.07	3.57	35.70
5	2x5	3.80	3.80	3.80
5a	—		—	—
6	2x4	0.20 / 0.78 / 2.90	3.88	31.04
7	2x3	0.20 / 3.40	3.60	21.60
8	6	1.47 ~ 1.77 / 1.21 ~ 0.60 / 1.47 ~ 1.77	4.15	24.90
9	6	1.18 ~ 1.47 / 1.81 ~ 1.21 / 1.18 ~ 1.47	4.16	24.96
9a	—		—	—
9b	—		—	—
10	12	1.18 / 1.81 / 1.18	4.17	50.04
10a	—		—	—
10b	—		—	—
11	4	0.85 ~ 1.18 / 1.81 / 0.85 ~ 1.18	3.84	15.36
12	6	0.85 / 1.81 / 0.85	3.51	21.06
13	4	0.85 ~ 1.20 / 1.81 / 0.85 ~ 1.20	3.86	15.44
14	4	1.20 / 1.81 / 1.20	4.21	16.84
15	6	0.70 / 1.81 / 0.70	3.21	19.26
16	3	1.83 ~ 2.26 / 0.62 ~ 0.66 / 1.83 ~ 2.26	4.50	13.50
17	8	0.50 / 0.20	0.70	5.60
18	10	1.70	1.70	17.00
19	3	3.60	3.60	10.80
20	12	0.95 / 0.20	1.15	13.80
21	4	0.20 / 1.81 / 0.20	2.21	8.84
22	4	0.20 / 0.40 / 0.25 / 0.25	1.10	4.40
23	20	0.035 / 0.035 / 0.09	0.21	4.20
24	6	0.09 / 0.23 / 0.10 / 0.09	0.84	5.04
		TOTAL LENGTH	513.13	

513.13 x 1.21 = 620.89 Kg

STR. 700—150

Pos.	No.	FORM	UNIT LENG.	LENG.
1	10	0.50 / 5.38 / 0.50	6.38	63.80
1a	—		—	—
2	9	0.20 / 3.64	3.84	34.56
3	9	0.35 / 3.10 / 0.20	3.65	32.85
4	2x6	0.50 / 3.12	3.62	43.44
5	2x5	4.25	4.25	42.50
5a	—		—	—
6	2x4	0.20 / 0.93 / 3.97	5.10	40.80
7	2x3	0.20 / 3.55	3.75	22.50
8	6	1.62 ~ 1.96 / 1.21 ~ 0.60 / 1.62 ~ 1.96	4.49	26.94
9	6	1.28 ~ 1.62 / 1.81 ~ 1.21 / 1.28 ~ 1.62	4.41	26.46
9a	—		—	—
9b	—		—	—
10	13	1.28 / 1.81 / 1.28	4.37	56.81
10a	—		—	—
10b	—		—	—
11	5	0.85 ~ 1.28 / 1.81 / 0.85 ~ 1.28	3.94	19.70
12	10	0.85 / 1.81 / 0.85	3.51	35.10
13	4	0.85 ~ 1.20 / 1.81 / 0.85 ~ 1.20	3.86	15.44
14	4	1.20 / 1.81 / 1.20	4.21	16.84
15	6	0.70 / 1.81 / 0.70	3.21	19.26
16	3	2.02 ~ 2.46 / 0.90 ~ 0.66 / 2.02 ~ 2.46	5.21	15.63
17	8	0.50 / 0.20	0.70	5.60
18	10	1.70	1.70	17.00
19	3	3.60	3.60	10.80
20	12	0.95 / 0.20	1.15	13.80
21	4	0.20 / 1.81 / 0.20	2.21	8.84
22	4	0.20 / 0.40 / 0.25 / 0.25	1.10	4.40
23	20	0.035 / 0.035 / 0.09	0.21	4.20
24	6	0.09 / 0.23 / 0.10 / 0.09	0.84	5.04
		TOTAL LENGTH	582.31	

582.31 x 1.21 = 704.60 Kg

STR. 700—200

Pos.	No	FORM	UNIT LENG.	LENG.
1	10	0.50 / 5.58 / 0.50	6.58	65.80
1a	—		—	—
2	9	0.20 / 4.87	5.07	45.63
3	9	0.35 / 3.20 / 0.20	3.75	33.75
4	2x6	0.50 / 3.14	3.64	43.68
5	2x5	4.55	4.55	45.50
5a	—		—	—
6	2x4	0.20 / 1.03 / 5.08	6.31	50.48
7	2x3	0.20 / 3.65	3.85	23.10
8	6	1.69 ~ 2.05 / 1.21 ~ 0.60 / 1.69 ~ 2.05	4.65	27.90
9	6	1.33 ~ 1.69 / 1.81 ~ 1.21 / 1.33 ~ 1.69	4.53	27.18
9a	—		—	—
9b	—		—	—
10	14	1.33 / 1.81 / 1.33	4.47	62.58
10a	—		—	—
10b	—		—	—
11	6	0.85 ~ 1.33 / 1.81 / 0.85 ~ 1.33	3.99	23.94
12	15	0.85 / 1.81 / 0.85	3.51	52.65
13	4	0.85 ~ 1.20 / 1.81 / 0.85 ~ 1.20	3.86	15.44
14	5	1.20 / 1.81 / 1.20	4.21	21.05
15	6	0.70 / 1.81 / 0.70	3.21	19.26
16	3	2.11 ~ 2.55 / 0.90 ~ 0.66 / 2.11 ~ 2.55	5.39	16.17
17	8	0.50 / 0.20	0.70	5.60
18	10	1.70	1.70	17.00
19	3	3.60	3.60	10.80
20	12	0.95 / 0.20	1.15	13.80
21	4	0.20 / 1.81 / 0.20	2.21	8.84
22	4	0.20 / 0.40 / 0.25 / 0.25	1.10	4.40
23	20	0.035 / 0.035 / 0.09	0.21	4.20
24	6	0.09 / 0.23 / 0.10 / 0.09	0.84	5.04
		TOTAL LENGTH	643.79	

643.79 x 1.21 = 778.99 Kg

STR. 700—250

Pos.	No.	FORM	UNIT LENG.	LENG.
1	10	0.50 / 5.73 / 0.50	6.73	67.30
1a	—		—	—
2	9	0.20 / 6.10	6.30	56.70
3	9	0.35 / 3.30 / 0.20	3.85	34.65
4	2x6	0.50 / 3.15	3.65	43.80
5	2x6	4.80	4.80	57.60
5a	—		—	—
6	2x4	0.20 / 1.13 / 5.20	7.53	60.24
7	2x3	0.20 / 3.75	3.95	23.70
8	6	1.72 ~ 2.05 / 1.21 ~ 0.60 / 1.72 ~ 2.05	4.68	28.08
9	6	1.38 ~ 1.72 / 1.81 ~ 1.21 / 1.38 ~ 1.72	4.61	27.66
9a	—		—	—
9b	—		—	—
10	14	1.38 / 1.81 / 1.38	4.57	63.98
10a	—		—	—
10b	—		—	—
11	6	0.85 ~ 1.38 / 1.81 / 0.85 ~ 1.38	4.04	24.24
12	19	0.85 / 1.81 / 0.85	3.51	66.69
13	4	0.85 ~ 1.20 / 1.81 / 0.85 ~ 1.20	3.86	15.44
14	5	1.20 / 1.81 / 1.20	4.21	21.05
15	6	0.70 / 1.81 / 0.70	3.21	19.26
16	3	2.11 ~ 2.55 / 0.90 ~ 0.66 / 2.11 ~ 2.55	5.39	16.17
17	8	0.50 / 0.20	0.70	5.60
18	10	1.70	1.70	17.00
19	3	3.60	3.60	10.80
20	12	0.95 / 0.20	1.15	13.80
21	4	0.20 / 1.81 / 0.20	2.21	8.84
22	4	0.20 / 0.40 / 0.25 / 0.25	1.10	4.40
23	20	0.035 / 0.035 / 0.09	0.21	4.20
24	6	0.15 / 0.28 / 0.10 / 0.15	1.06	6.36
		TOTAL LENGTH	689.56	

689.56 x 1.21 = 834.37 Kg

STR. 700—300

Pos.	No.	FORM	UNIT LENG.	LENG.
1	10	0.50 / 5.83 / 0.50	6.83	68.30
1a	—		—	—
2	9	0.20 / 7.33	7.53	67.77
3	9	0.35 / 3.45 / 0.20	4.00	36.00
4	2x7	0.50 / 3.18	3.68	51.52
5	2x6	5.00	5.00	60.00
5a	—		—	—
6	2x4	0.20 / 1.28 / 7.32	8.80	70.40
7	2x3	0.20 / 3.90	4.10	24.60
8	6	1.79 ~ 2.15 / 1.21 ~ 0.60 / 1.79 ~ 2.15	4.85	29.10
9	6	1.43 ~ 1.79 / 1.81 ~ 1.21 / 1.43 ~ 1.79	4.73	28.38
9a	—		—	—
9b	—		—	—
10	15	1.43 / 1.81 / 1.43	4.67	70.05
10a	—		—	—
10b	—		—	—
11	7	0.85 ~ 1.43 / 1.81 / 0.85 ~ 1.43	4.09	28.63
12	24	0.85 / 1.81 / 0.85	3.51	84.24
13	4	0.85 ~ 1.20 / 1.81 / 0.85 ~ 1.20	3.86	15.44
14	6	1.20 / 1.81 / 1.20	4.21	25.26
15	6	0.70 / 1.81 / 0.70	3.21	19.26
16	3	2.21 ~ 2.65 / 0.79 0.66 / 2.21 ~ 2.65	5.59	16.77
17	8	0.50 / 0.20	0.70	5.60
18	10	1.70	1.70	17.00
19	3	3.60	3.60	10.80
20	12	0.95 / 0.20	1.15	13.80
21	4	0.20 / 1.81 / 0.20	2.21	8.84
22	4	0.20 / 0.40 / 0.25 / 0.25	1.10	4.40
23	20	0.035 / 0.035 / 0.09	0.21	4.20
24	6	0.15 / 0.28 / 0.10 / 0.15	1.06	6.63
		TOTAL LENGTH	766.72	

766.72 x 1.21 = 927.73 Kg

ALL BARS ARE ϕ 14 (1.21 Kg / m)

REFERENCE DWGS: For plan & section see dwg.No. 11/1/1/01
For reinforcement see dwgs.No. 11/1/3/01 TO 11/1/3/03
For bars with variable unit length see note under the same title at dwg.No. 20/2/1/01

Scale:	IRRIGATION & DRAINAGE STANDARDS		
Date:	DWG.No. 11/1/3/11	RECTANGULAR INCLINED DROP LIST OF REINFORCEMENT	
Approved:	Sheet No. 15 of 32	Rev.No.	STR. 700_100 TO 700_300

ISLAMIC REPUBLIC OF IRAN
MINISTRY OF PLAN & BUDGET
TECHNICAL RESEARCH AND STANDARD BUREAU

omoorepeyman.ir

STR. 700_350

Pos.	No.	FORM	UNIT LENG.	LENG.
1	10	0.50 — 5.98 — 0.50	6.98	69.80
1a	—		—	—
2	9	0.20 — 8.50	8.70	78.30
3	9	0.35 — 3.60 — 0.20	4.15	37.35
4	2x7	0.50 — 3.21	3.71	51.94
5	2x6	5.25	5.25	63.00
5a	—		—	—
6	2x4	0.20 — 1.43 — 8.38	10.01	80.08
7	2x3	0.20 — 4.05	4.25	25.50
8	6	1.86 / 2.24 — 1.21 ~ 0.60 — 1.86 / 2.24	5.01	30.06
9	6	1.48 / 1.86 — 1.81 ~ 1.21 — 1.48 / 1.86	4.85	29.10
9a	—		—	—
9b	—		—	—
10	15	1.48 — 1.81 — 1.48	4.77	71.55
10a	—		—	—
10b	—		—	—
11	7	0.85 / 1.48 — 1.81 — 0.85 / 1.48	4.14	28.98
12	28	0.85 — 1.81 — 0.85	3.51	98.28
13	4	0.85 / 1.20 — 1.81 — 0.85 / 1.20	3.86	15.44
14	6	1.20 — 1.81 — 1.20	4.21	25.26
15	6	0.70 — 1.81 — 0.70	3.21	19.26
16	3	2.30 / 2.75 — 0.79 ~ 0.66 — 2.30 / 2.75	5.78	17.34
17	8	0.50 — 0.20	0.70	5.60
18	10	1.70	1.70	17.00
19	3	3.60	3.60	10.80
20	12	0.95 — 0.20	1.15	13.80
21	4	0.20 — 1.81 — 0.20	2.21	8.84
22	4	0.20 — 0.40 — 0.25 — 0.25	1.10	4.40
23	20	0.035 — 0.035 — 0.09	0.21	4.20
24	6	0.15 — 0.28 — 0.10 — 0.15	1.06	6.36
		TOTAL LENGTH		812.24

812.24 x 1.21 = 982.81 Kg

STR. 700_400

Pos.	No.	FORM	UNIT LENG.	LENG.
1	10	0.50 — 6.08 — 0.50	7.08	70.80
1a	—		—	—
2	9	0.20 — 9.67	9.87	88.83
3	9	0.35 — 3.70 — 0.20	4.25	38.25
4	2x7	0.50 — 3.21	3.71	51.94
5	2x6	5.35	5.35	64.20
5a	—		—	—
6	2x4	0.20 — 1.53 — 9.56	11.29	90.32
7	2x3	0.20 — 4.15	4.35	26.10
8	6	1.86 / 2.24 — 1.21 ~ 0.60 — 1.86 / 2.24	5.01	30.06
9	6	1.48 / 1.86 — 1.81 ~ 1.21 — 1.48 / 1.86	4.85	29.10
9a	—		—	—
9b			—	—
10	16	1.48 — 1.81 — 1.48	4.77	76.32
10a	—		—	—
10b			—	—
11	7	0.85 / 1.48 — 1.81 — 0.85 / 1.48	4.14	28.98
12	32	0.85 — 1.81 — 0.85	3.51	112.32
13	4	0.85 / 1.20 — 1.81 — 0.85 / 1.20	3.86	15.44
14	7	1.20 — 1.81 — 1.20	4.21	29.47
15	6	0.70 — 1.81 — 0.70	3.21	19.26
16	3	2.30 / 2.75 — 0.79 ~ 0.65 — 2.30 / 2.75	5.78	17.34
17	8	0.50 — 0.20	0.70	5.60
18	10	1.70	1.70	17.00
19	3	3.60	3.60	10.80
20	12	0.95 — 0.20	1.15	13.80
21	4	0.20 — 1.81 — 0.20	2.21	8.84
22	4	0.20 — 0.40 — 0.25 — 0.25	1.10	4.40
23	20	0.035 — 0.035 — 0.09	0.21	4.20
24	6	0.15 — 0.28 — 0.10 — 0.15	1.06	6.36
		TOTAL LENGTH		859.73

859.73 x 1.21 = 1040.27 Kg

STR. 800_100

Pos.	No.	FORM	UNIT LENG.	LENG.
1	10	0.50 — 5.43 — 0.50	6.43	64.30
1a			—	—
2	9	0.20 — 2.35	2.55	22.95
3	9	0.35 — 3.00 — 0.20	3.55	31.95
4	10	0.50 — 3.17	3.67	36.70
5	2x5	4.10	4.10	41.00
5a	—		—	—
6	2x4	0.20 — 0.73 — 2.90	3.83	30.64
7	6	0.20 — 3.45	3.65	21.90
8	7	1.50 / 1.77 — 1.21 ~ 0.60 — 1.50 / 1.77	4.18	29.26
9	6	1.23 / 1.50 — 1.81 ~ 1.21 — 1.23 / 1.50	4.24	25.44
9a			—	—
9b			—	—
10	13	1.23 — 1.81 — 1.21	4.23	54.99
10a	—		—	—
10b	—		—	—
11	5	0.85 / 1.23 — 1.81 — 0.85 / 1.23	3.89	19.45
12	5	0.85 — 1.81 — 0.85	3.51	17.55
13	5	0.85 / 1.25 — 1.81 — 0.85 / 1.25	3.91	19.55
14	4	1.25 — 1.81 — 1.25	4.31	17.24
15	6	0.75 — 1.81 — 0.75	3.31	19.86
16	3	1.83 / 2.26 — 0.82 ~ 0.66 — 1.83 / 2.26	4.83	14.49
17	8	0.50 — 0.20	0.70	5.60
18	10	1.75	1.75	17.50
19	3	3.70	3.70	11.10
20	12	1.00 — 0.20	1.20	14.40
21	4	0.20 — 1.81 — 0.20	2.21	8.84
22	6	0.20 — 0.40 — 0.25 — 0.25	1.10	6.60
23	27	0.035 — 0.035 — 0.09	0.21	5.67
24	8	0.09 — 0.23 — 0.10 — 0.09	0.84	6.72
		TOTAL LENGTH		543.70

543.70 x 1.21 = 657.88 Kg

STR. 800_150

Pos.	No.	FORM	UNIT LENG.	LENG.
1	10	0.50 — 5.68 — 0.50	6.68	66.80
1a	—		—	—
2	9	0.20 — 3.64	3.84	34.56
3	9	0.35 — 3.15 — 0.20	3.70	33.30
4	2x6	0.50 — 3.21	3.71	44.52
5	2x5	4.55	4.55	45.50
5a	—		—	—
6	2x4	0.20 — 0.88 — 3.92	5.05	40.40
7	2x3	0.20 — 3.60	3.80	22.80
8	7	1.64 / 1.96 — 1.21 ~ 0.60 — 1.64 / 1.96	4.51	31.57
9	6	1.33 / 1.64 — 1.81 ~ 1.21 — 1.33 / 1.64	4.48	26.88
9a	—		—	—
9b	—		—	—
10	14	1.33 — 1.81 — 1.33	4.47	62.58
10a	—		—	—
10b	—		—	—
11	6	0.85 / 1.33 — 1.81 — 0.85 / 1.33	3.99	23.94
12	10	0.85 — 1.81 — 0.85	3.51	35.10
13	5	0.85 / 1.25 — 1.81 — 0.85 / 1.25	3.91	19.55
14	4	1.25 — 1.81 — 1.25	4.31	17.24
15	6	0.75 — 1.81 — 0.75	3.31	19.86
16	3	2.02 / 2.46 — 0.80 ~ 0.66 — 2.02 / 2.46	5.21	15.63
17	8	0.50 — 0.20	0.70	5.60
18	10	1.75	1.75	17.50
19	3	3.70	3.70	11.10
20	12	1.00 — 0.20	1.20	14.40
21	4	0.20 — 1.81 — 0.20	2.21	8.84
22	6	0.20 — 0.40 — 0.25 — 0.25	1.10	6.60
23	27	0.035 — 0.035 — 0.09	0.21	5.67
24	8	0.09 — 0.23 — 0.10 — 0.09	0.84	6.72
		TOTAL LENGTH		616.66

616.66 x 1.21 = 746.16 Kg

STR. 800_200

Pos.	No.	FORM	UNIT LENG.	LENG.
1	10	0.50 — 5.88 — 0.50	6.88	68.80
1a	—		—	—
2	9	0.20 — 4.87	5.07	45.63
3	9	0.35 — 3.25 — 0.20	3.80	34.20
4	2x6	0.50 — 3.24	3.74	44.88
5	2x6	4.86	4.85	58.20
5a	—		—	—
6	2x4	0.20 — 0.98 — 5.08	6.26	50.08
7	2x3	0.20 — 3.70	3.90	23.40
8	7	1.72 / 2.05 — 1.21 ~ 0.60 — 1.72 / 2.05	4.68	32.76
9	6	1.38 / 1.72 — 1.81 ~ 1.21 — 1.38 / 1.72	4.61	27.66
9a	—		—	—
9b	—		—	—
10	15	1.38 — 1.81 — 1.38	4.57	68.55
10a	—		—	—
10b	—		—	—
11	6	0.85 / 1.38 — 1.81 — 0.85 / 1.38	4.04	24.24
12	14	0.85 — 1.81 — 0.85	3.51	49.14
13	5	0.85 / 1.25 — 1.81 — 0.85 / 1.25	3.91	19.55
14	5	1.25 — 1.81 — 1.25	4.31	21.55
15	6	0.75 — 1.81 — 0.75	3.31	19.86
16	3	2.11 / 2.55 — 0.80 ~ 0.66 — 2.11 / 2.55	5.39	16.17
17	8	0.50 — 0.20	0.70	5.60
18	10	1.75	1.75	17.50
19	3	3.70	3.70	11.10
20	12	1.00 — 0.20	1.20	14.40
21	4	0.20 — 1.81 — 0.20	2.21	8.84
22	6	0.20 — 0.40 — 0.25 — 0.25	1.10	6.60
23	27	0.035 — 0.035 — 0.09	0.21	5.67
24	8	0.15 — 0.28 — 0.10 — 0.15	1.06	8.48
		TOTAL LENGTH		682.86

682.86 x 1.21 = 826.26 Kg

ALL BARS ARE Φ 14 (1.21 Kg/m)

REFERENCE DWGS: For plan & section see dwg. No. 11/1/1/01
For reinforcement see dwgs. No. 11/1/3/01 TO 11/1/3/03
For bars with variable unit length see note under the same title at dwg No. 20/2/1/01

Scale:	IRRIGATION & DRAINAGE STANDARDS		ISLAMIC REPUBLIC OF IRAN
Date:	DWG. No. 11/1/3/12	RECTANGULAR INCLINED DROP LIST OF REINFORCEMENT	MINISTRY OF PLAN & BUDJET
Approved:	Sheet No. 16 of 32 Rev. No.	STR. 700 - 350 TO 800 - 200	TECHNICAL RESEARCH AND STANDARD BUREAU

omoorepeyman.ir

STR. 800_250

Pos.	No.	FORM	UNIT LENG.	LENG.
1	10	0.50 6.03 0.50	7.03	70.30
1a	—		—	—
2	9	0.20 6.10	6.30	56.70
3	9	0.35 3.40 0.20	3.95	35.55
4	2x7	0.50 3.30	3.80	53.20
5	2x6	5.20	5.20	62.40
5a	—		—	—
6	2x4	0.20 1.13 6.09	7.42	59.36
7	2x3	0.20 3.85	4.05	24.30
8	7	1.86 2.24 1.21~0.60 1.86 2.24	5.01	35.07
9	6	1.48 1.86 1.81~1.21 1.48 1.86	4.85	29.10
9a	—		—	—
9b	—		—	—
10	15	1.48 1.81 1.48	4.77	71.55
10a	—		—	—
10b	—		—	—
11	7	0.85 1.48 1.81 0.85 1.48	4.14	28.98
12	18	0.85 1.81 0.85	3.51	63.18
13	5	0.85 1.25 1.81 0.85 1.25	3.91	19.55
14	5	1.25 1.81 1.25	4.31	21.55
15	6	0.75 1.81 0.75	3.31	19.86
16	3	2.30 2.75 0.79~0.66 2.30 2.75	5.78	17.34
17	8	0.50 0.20	0.70	5.60
18	10	1.75	1.75	17.50
19	3	3.70	3.70	11.10
20	12	1.00 0.20	1.20	14.40
21	4	0.20 1.81 0.20	2.21	8.84
22	6	0.20 0.40 0.25 0.25	1.10	6.60
23	27	0.035 0.035 0.09	0.21	5.67
24	8	0.28 0.15 0.10 0.15	1.06	8.48
		TOTAL LENGTH		746.18

746.18 x 1.21 = 902.88 Kg

STR. 800_300

Pos.	No.	FORM	UNIT LENG.	LENG.
1	10	0.50 6.23 0.50	7.23	72.30
1a	—		—	—
2	9	0.20 7.33	7.53	67.77
3	9	0.35 3.55 0.20	4.10	36.90
4	2x7	0.50 3.30	3.80	53.20
5	2x6	5.50	5.50	66.00
5a	—		—	—
6	2x4	0.20 1.28 7.21	8.69	69.52
7	2x3	0.20 4.00	4.20	25.20
8	7	1.88 2.24 1.21~0.60 1.88 2.24	5.03	35.21
9	6	1.53 1.88 1.81~1.21 1.53 1.88	4.92	29.52
9a	—		—	—
9b	—		—	—
10	16	1.53 1.81 1.53	4.87	77.92
10a	—		—	—
10b	—		—	—
11	8	0.85 1.53 1.81 0.85 1.53	4.19	33.52
12	23	0.85 1.81 0.85	3.51	80.73
13	5	0.85 1.25 1.81 0.85 1.25	3.91	19.55
14	6	1.25 1.81 1.25	4.31	25.86
15	6	0.75 1.81 0.75	3.31	19.86
16	3	2.30 2.75 0.79~0.66 2.30 2.75	5.78	17.34
17	8	0.50 0.20	0.70	5.60
18	10	1.75	1.75	17.50
19	3	3.70	3.70	11.10
20	12	1.00 0.20	1.20	14.40
21	4	0.20 1.81 0.20	2.21	8.84
22	6	0.20 0.40 0.25 0.25	1.10	6.60
23	27	0.035 0.035 0.09	0.21	5.67
24	8	0.28 0.15 0.10 0.15	1.06	8.48
		TOTAL LENGTH		808.59

808.59 x 1.21 = 978.39 Kg

STR. 800_350

Pos.	No.	FORM	UNIT LENG.	LENG.
1	10	0.50 6.33 0.50	7.33	73.30
1a	—		—	—
2	9	0.20 8.50	8.70	78.30
3	9	0.35 3.70 0.20	4.25	38.25
4	2x8	0.50 3.36	3.86	61.76
5	2x6	5.70	5.70	68.40
5a	—		—	—
6	2x4	0.20 1.43 8.27	9.90	79.20
7	2x3	0.20 4.15	4.35	26.10
8	7	2.00 2.43 1.21~0.60 2.00 2.43	5.34	37.38
9	6	1.58 2.00 1.81~1.21 1.58 2.00	5.09	30.54
9a	—		—	—
9b	—		—	—
10	17	1.58 1.81 1.58	4.97	84.49
10a	—		—	—
10b	—		—	—
11	8	0.85 1.58 1.81 0.85 1.58	4.24	33.92
12	27	0.85 1.81 0.85	3.51	94.77
13	5	0.85 1.25 1.81 0.85 1.25	3.91	19.55
14	6	1.25 1.81 1.25	4.31	25.86
15	6	0.75 1.81 0.75	3.31	19.86
16	3	2.49 2.94 0.78~0.66 2.49 2.94	6.15	18.45
17	8	0.50 0.20	0.70	5.60
18	10	1.75	1.75	17.50
19	3	3.70	3.70	11.10
20	12	1.00 0.20	1.20	14.40
21	4	0.20 1.81 0.20	2.21	8.84
22	6	0.20 0.40 0.25 0.25	1.10	6.60
23	27	0.035 0.035 0.09	0.21	5.67
24	8	0.28 0.15 0.10 0.15	1.06	8.48
		TOTAL LENGTH		868.32

868.32 x 1.21 = 1050.67 Kg

STR. 800_400

Pos.	No.	FORM	UNIT LENG.	LENG.
1	10	0.50 6.48 0.50	7.48	74.80
1a	—		—	—
2	9	0.20 9.67	9.87	88.83
3	9	0.35 3.80 0.20	4.35	39.15
4	2x8	0.50 3.36	3.86	61.76
5	2x6	3.85	5.85	70.20
5a			—	—
6	2x4	0.20 1.53 9.44	11.17	89.36
7	2x3	0.20 4.25	4.45	26.70
8	7	2.00 2.43 1.21~0.60 2.00 2.43	5.34	37.38
9	6	1.58 2.00 1.81~1.21 1.58 2.00	5.09	30.54
9a	—		—	—
9b	—		—	—
10	17	1.58 1.81 1.58	4.97	84.49
10a	—		—	—
10b	—		—	—
11	8	0.85 1.58 1.81 0.85 1.58	4.24	33.92
12	32	0.85 1.81 0.85	3.51	112.32
13	5	0.85 1.25 1.81 0.85 1.25	3.91	19.55
14	7	1.25 1.81 1.25	4.31	30.17
15	6	0.75 1.81 0.75	3.31	19.86
16	3	2.49 2.94 0.78~0.66 2.49 2.94	6.15	18.45
17	8	0.50 0.20	0.70	5.60
18	10	1.75	1.75	17.50
19	3	3.70	3.70	11.10
20	12	1.00 0.20	1.20	14.40
21	4	0.20 1.81 0.20	2.21	8.84
22	6	0.20 0.40 0.25 0.25	1.10	6.60
23	27	0.035 0.035 0.09	0.21	5.67
24	8	0.28 0.15 0.10 0.15	1.06	8.48
		TOTAL LENGTH		915.67

915.67 x 1.21 = 1107.96 Kg

STR. 900_100

Pos.	No.	FORM	UNIT LENG.	LENG.
1	10	0.50 5.63 0.50	6.63	66.30
1a	—		—	—
2	9	0.20 2.35	2.55	22.95
3	9	0.35 3.40 0.20	3.95	35.55
4	2x5	0.50 3.27	3.77	37.70
5	2x5	4.30	4.30	43.00
5a			—	—
6	2x4	0.20 0.83 2.79	3.82	30.56
7	2x3	0.20 3.85	4.05	24.30
8	7	1.57 1.86 1.26~0.60 1.57 1.86	4.36	30.52
9	6	1.28 1.57 1.91~1.26 1.28 1.57	4.44	26.64
9a	—		—	—
9b	—		—	—
10	13	1.28 1.91 1.28	4.47	58.11
10a	—		—	—
10b	—		—	—
11	5	0.85 1.28 1.91 0.85 1.28	4.04	20.20
12	5	0.85 1.91 0.85	3.61	18.05
13	5	0.85 1.25 1.91 0.85 1.25	4.01	20.05
14	4	1.25 1.91 1.25	4.41	17.64
15	7	0.75 1.91 0.75	3.41	23.87
16	3	1.92 2.36 0.81~0.66 1.92 2.36	5.02	15.06
17	8	0.50 0.20	0.70	5.60
18	10	1.75	1.75	17.50
19	3	3.90	3.90	11.70
20	12	1.05 0.20	1.25	15.00
21	4	0.20 1.91 0.20	2.31	9.24
22	6	0.20 0.40 0.25 0.25	1.10	6.60
23	27	0.035 0.035 0.09	0.21	5.67
24	8	0.23 0.09 0.10 0.09	0.84	6.72
		TOTAL LENGTH		568.53

568.53 x 1.21 = 687.92 Kg

ALL BARS ARE Φ14 (1.21 Kg/m)

REFERENCE DWGS: For plan & section see dwg. No. 11/1/1/01

For reinforcement see dwgs. No. 11/1/3/01 TO 11/1/3/03

For bars with variable unit length see note under the same title at dwg. No. 20/2/1/01

Scale:

Date:

Approved:

IRRIGATION & DRAINAGE STANDARDS

DWG. No. 11/1/3/13

Sheet No. 17 of 32 Rev. No.

RECTANGULAR INCLINED DROP
LIST OF REINFORCEMENT
STR. 800_250 TO 900_100

ISLAMIC REPUBLIC OF IRAN
MINISTRY OF PLAN & BU
TECHNICAL RESEARCH AND
STANDARD BUREAU

omoorepeyman.ir

STR. 800–250

Pos.	No.	FORM	UNIT LENG.	LENG.
1	10	0.50 6.03 0.50	7.03	70.30
1a	—		—	—
2	9	0.20 6.10	6.30	56.70
3	9	0.35 3.40 0.20	3.95	35.55
4	2x7	0.50 3.30	3.80	53.20
5	2x6	5.20	5.20	62.40
5a	—		—	—
6	2x4	0.20 1.13 6.09	7.42	59.36
7	2x3	0.20 3.85	4.05	24.30
8	7	1.86 2.24 1.21~0.60 1.86 2.24	5.01	35.07
9	6	1.48 1.86 1.81~1.21 1.48 1.86	4.85	29.10
9a	—		—	—
9b	—		—	—
10	15	1.48 1.81 1.48	4.77	71.55
10a	—		—	—
10b	—		—	—
11	7	0.85 1.48 1.81 0.85 1.48	4.14	28.98
12	18	0.85 1.81 0.85	3.51	63.18
13	5	0.85 1.25 1.81 0.85 1.25	3.91	19.55
14	5	1.25 1.81 1.25	4.31	21.55
15	6	0.75 1.81 0.75	3.31	19.86
16	3	2.30 2.75 0.79~0.66 2.30 2.75	5.78	17.34
17	8	0.50 0.20	0.70	5.60
18	10	1.75	1.75	17.50
19	3	3.70	3.70	11.10
20	12	1.00 0.20	1.20	14.40
21	4	0.20 1.81 0.20	2.21	8.84
22	6	0.20 0.40 0.25 0.25	1.10	6.60
23	27	0.035 0.035 0.09	0.21	5.67
24	8	0.28 0.15 0.10 0.15	1.06	8.48
		TOTAL LENGTH	746.18	

746.18 x 1.21 = 902.88 Kg.

STR. 800–300

Pos.	No.	FORM	UNIT LENG.	LENG.
1	10	0.50 6.23 0.50	7.23	72.30
1a	—		—	—
2	9	0.20 7.33	7.53	67.77
3	9	0.35 3.55 0.20	4.10	36.90
4	2x7	0.50 3.30	3.80	53.20
5	2x6	5.50	5.50	66.00
5a	—		—	—
6	2x4	0.20 1.28 7.21	8.69	69.52
7	2x3	0.20 4.00	4.20	25.20
8	7	1.88 2.24 1.21~0.60 1.88 2.24	5.03	35.21
9	6	1.53 1.88 1.81~1.21 1.53 1.88	4.92	29.52
9a	—		—	—
9b	—		—	—
10	16	1.53 1.81 1.53	4.87	77.92
10a	—		—	—
10b	—		—	—
11	8	0.85 1.53 1.81 0.85 1.53	4.19	33.52
12	23	0.85 1.81 0.85	3.51	80.73
13	5	0.85 1.25 1.81 0.85 1.25	3.91	19.55
14	6	1.25 1.81 1.25	4.31	25.86
15	6	0.75 0.75	3.31	19.86
16	3	2.30 2.75 0.79~0.66 2.30 2.75	5.78	17.34
17	8	0.50 0.20	0.70	5.60
18	10	1.75	1.75	17.50
19	3	3.70	3.70	11.10
20	12	1.00 0.20	1.20	14.40
21	4	0.20 1.81 0.20	2.21	8.84
22	6	0.20 0.40 0.25 0.25	1.10	6.60
23	27	0.035 0.035 0.09	0.21	5.67
24	8	0.28 0.15 0.10 0.15	1.06	8.48
		TOTAL LENGTH	808.59	

808.59 x 1.21 = 978.39Kg.

STR. 800–350

Pos.	No.	FORM	UNIT LENG.	LENG.
1	10	0.50 6.33 0.50	7.33	73.30
1a	—		—	—
2	9	0.20 8.50	8.70	78.30
3	9	0.35 3.70 0.20	4.25	38.25
4	2x8	0.50 3.36	3.86	61.76
5	2x6	5.70	5.70	68.40
5a	—		—	—
6	2x4	0.20 1.43 8.27	9.90	79.20
7	2x3	0.20 4.15	4.35	26.10
8	7	2.00 2.43 1.21~0.60 2.00 2.43	5.34	37.38
9	6	1.58 2.00 1.81~1.21 1.58 2.00	5.09	30.54
9a	—		—	—
9b	—		—	—
10	17	1.58 1.81 1.58	4.97	84.49
10a	—		—	—
10b	—		—	—
11	8	0.85 1.58 1.81 0.85 1.58	4.24	33.92
12	27	0.85 1.81 0.85	3.51	94.77
13	5	0.85 1.25 1.81 0.85 1.25	3.91	19.55
14	6	1.25 1.81 1.25	4.31	25.86
15	6	0.75 1.81 0.75	3.31	19.86
16	3	2.49 2.94 0.78~0.66 2.49 2.94	6.15	18.45
17	8	0.50 0.20	0.70	5.60
18	10	1.75	1.75	17.50
19	3	3.70	3.70	11.10
20	12	1.00 0.20	1.20	14.40
21	4	0.20 1.81 0.20	2.21	8.84
22	6	0.20 0.40 0.25 0.25	1.10	6.60
23	27	0.035 0.035 0.09	0.21	5.67
24	8	0.28 0.15 0.10 0.15	1.06	8.48
		TOTAL LENGTH	868.32	

868.32 x 1.21 = 1050.67Kg

STR. 800–400

Pos.	No.	FORM	UNIT LENG.	LENG.
1	10	0.50 6.48 0.50	7.48	74.80
1a	—		—	—
2	9	0.20 9.67	9.87	88.83
3	9	0.35 3.80 0.20	4.35	39.15
4	2x8	0.50 3.36	3.86	61.76
5	2x6	3.85	5.85	70.20
5a			—	—
6	2x4	0.20 1.53 9.44	11.17	89.36
7	2x3	0.20 4.25	4.45	26.70
8	7	2.00 2.43 1.21~0.60 2.00 2.43	5.34	37.38
9	6	1.58 2.00 1.81~1.21 1.58 2.00	5.09	30.54
9a	—		—	—
9b	—		—	—
10	17	1.58 1.81 1.58	4.97	84.49
10a	—		—	—
10b	—		—	—
11	8	0.85 1.58 1.81 0.85 1.58	4.24	33.92
12	32	0.85 1.81 0.85	3.51	112.32
13	5	0.85 1.25 1.81 0.85 1.25	3.91	19.55
14	7	1.25 1.81 1.25	4.31	30.17
15	6	0.75 1.81 0.75	3.31	19.86
16	3	2.49 2.94 0.78~0.66 2.49 2.94	6.15	18.45
17	8	0.50 0.20	0.70	5.60
18	10	1.75	1.75	17.50
19	3	3.70	3.70	11.10
20	12	1.00 0.20	1.20	14.40
21	4	0.20 1.81 0.20	2.21	8.84
22	6	0.20 0.40 0.25 0.25	1.10	6.60
23	27	0.035 0.035 0.09	0.21	5.67
24	8	0.28 0.15 0.10 0.15	1.06	8.48
		TOTAL LENGTH	915.67	

915.67 x 1.21 = 1107.96 Kg.

STR. 900–100

Pos.	No.	FORM	UNIT LENG.	LENG.
1	10	0.50 5.63 0.50	6.63	66.30
1a	—		—	—
2	9	0.20 2.35	2.55	22.95
3	9	0.35 3.40 0.20	3.95	35.55
4	2x5	0.50 3.27	3.77	37.70
5	2x5	4.30	4.30	43.00
5a			—	—
6	2x4	0.20 0.83 2.79	3.82	30.56
7	2x3	0.20 3.85	4.05	24.30
8	7	1.57 1.86 1.26~0.60 1.57 1.86	4.36	30.52
9	6	1.28 1.57 1.91~1.26 1.28 1.57	4.44	26.64
9a	—		—	—
9b	—		—	—
10	13	1.28 1.91 1.28	4.47	58.11
10a	—		—	—
10b	—		—	—
11	5	0.85 1.28 1.91 0.85 1.28	4.04	20.20
12	5	0.85 1.91 0.85	3.61	18.05
13	5	0.85 1.25 1.91 0.85 1.25	4.01	20.05
14	4	1.25 1.91 1.25	4.41	17.64
15	7	0.75 1.91 0.75	3.41	23.87
16	3	1.92 2.36 0.81~0.66 1.92 2.36	5.02	15.06
17	8	0.50 0.20	0.70	5.60
18	10	1.75	1.75	17.50
19	3	3.90	3.90	11.70
20	12	1.05 0.20	1.25	15.00
21	4	0.20 1.91 0.20	2.31	9.24
22	6	0.20 0.40 0.25 0.25	1.10	6.60
23	27	0.035 0.035 0.09	0.21	5.67
24	8	0.23 0.09 0.10 0.09	0.84	6.72
		TOTAL LENGTH	568.53	

568.53 x 1.21 = 687.92 Kg.

ALL BARS ARE Φ14 (1.21 Kg/m)

REFERENCE DWGS: For plan & section see dwg. No. 11/1/1/01

For reinforcement see dwgs. No. 11/1/3/01 TO 11/1/3/03

For bars with variable unit length see note under the same title at dwg. No. 20/2/1/01

Scale:	IRRIGATION & DRAINAGE STANDARDS		
Date:	DWG. No. 11/1/3/13	RECTANGULAR INCLINED DROP LIST OF REINFORCEMENT	
Approved:	Sheet No. 17 of 32	Rev. No.	STR. 800–250 TO 900–100

ISLAMIC REPUBLIC OF IRAN
MINISTRY OF PLAN & BUDGET
TECHNICAL RESEARCH AND STANDARD BUREAU

omoorepeyman.ir

STR. 900–150

Pos.	No.	FORM	UNIT LENG.	LENG.
1	10	0.50 5.88 0.50	6.88	68.80
1a	—		—	—
2	9	0.20 3.64	3.84	34.56
3	9	0.35 3.50 0.20	4.05	36.45
4	2x6	0.50 3.32	3.82	45.84
5	2x6	4.75	4.75	57.00
5a	—		—	—
6	2x4	0.20 0.93 3.85	4.98	39.84
7	2x3	0.20 3.95	4.15	24.90
8	7	1.72 ~ 2.05 1.26 ~ 0.60 1.72 ~ 2.05	4.70	32.90
9	6	1.38 ~ 1.72 1.91 ~ 1.26 1.38 ~ 1.72	4.69	28.14
9a	—		—	—
9b	—		—	—
10	14	1.38 1.91 1.38	4.67	65.38
10a	—		—	—
10b	—		—	—
11	6	0.85 ~ 1.38 1.91 0.85 ~ 1.38	4.14	24.84
12	9	0.85 1.91 0.85	3.61	32.49
13	5	0.85 ~ 1.25 1.91 0.85 ~ 1.25	4.01	20.05
14	4	1.25 1.91 1.25	4.41	17.64
15	7	0.75 1.91 0.75	3.41	23.87
16	3	2.11 ~ 2.55 0.80 ~ 0.66 2.11 ~ 2.55	5.39	16.17
17	8	0.50 0.20	0.70	5.60
18	10	1.75	1.75	17.50
19	3	3.90	3.90	11.70
20	12	1.05 0.20	1.25	15.00
21	4	0.20 1.91 0.20	2.31	9.24
22	6	0.20 0.40 0.25 0.25	1.10	6.60
23	27	0.035 0.035 0.09	0.21	5.67
24	8	0.23 0.09 0.10 0.09	0.84	6.72
		TOTAL LENGTH		646.90

646.90 x 1.21 = 782.75 Kg.

STR. 900–200

Pos.	No.	FORM	UNIT LENG.	LENG.
1	10	0.50 6.08 0.50	7.08	70.80
1a	—		—	—
2	9	0.20 4.87	5.07	45.63
3	9	0.35 3.60 0.20	4.15	37.35
4	2x6	0.50 3.34	3.84	46.08
5	2x6	5.05	5.05	60.60
5a	—		—	—
6	2x4	0.20 1.03 4.79	6.20	49.60
7	2x3	0.20 4.05	4.25	25.50
8	7	1.79 ~ 2.15 1.26 ~ 0.60 1.79 ~ 2.15	4.87	34.09
9	6	1.43 ~ 1.79 1.91 ~ 1.26 1.43 ~ 1.79	4.81	28.86
9a	—		—	—
9b	—		—	—
10	15	1.43 1.91 1.43	4.77	71.55
10a	—		—	—
10b	—		—	—
11	7	0.85 ~ 1.43 1.91 0.85 ~ 1.43	4.19	29.33
12	14	0.85 1.91 0.85	3.61	50.54
13	5	0.85 ~ 1.25 1.91 0.85 ~ 1.25	4.01	20.05
14	5	1.25 1.91 1.25	4.41	22.05
15	7	0.75 1.91 0.75	3.41	23.87
16	3	2.21 ~ 2.65 0.79 ~ 0.66 2.21 ~ 2.65	5.59	16.77
17	8	0.50 0.20	0.70	5.60
18	10	1.75	1.75	17.50
19	3	3.90	3.90	11.70
20	12	1.05 0.20	1.25	15.00
21	4	0.20 1.91 0.20	2.31	9.24
22	6	0.20 0.40 0.25 0.25	1.10	6.60
23	27	0.035 0.035	0.21	5.67
24	8	0.28 0.15 0.10 0.15	1.06	8.48
		TOTAL LENGTH		712.46

712.46 x 1.21 = 862.08 Kg.

STR. 900–250

Pos.	No.	FORM	UNIT LENG.	LENG.
1	10	0.50 6.28 0.50	7.28	72.80
1a	—		—	—
2	9	0.20 5.10	6.30	56.70
3	9	0.35 3.80 0.20	4.35	39.15
4	2x7	0.50 3.37	3.87	54.18
5	2x6	5.35	5.35	64.20
5a	—		—	—
6	2x4	0.20 1.23 6.09	7.52	60.16
7	2x3	0.20 4.25	4.45	26.70
8	7	1.86 ~ 2.24 1.26 ~ 0.60 1.86 ~ 2.24	5.03	35.21
9	6	1.48 ~ 1.86 1.91 ~ 1.26 1.48 ~ 1.86	4.93	29.58
9a	—		—	—
9b	—		—	—
10	16	1.48 1.91 1.48	4.87	77.92
10a	—		—	—
10b	—		—	—
11	7	0.85 ~ 1.48 1.91 0.85 ~ 1.48	4.24	29.60
12	18	0.85 1.91 0.85	3.61	64.98
13	5	0.85 ~ 1.25 1.91 0.85 ~ 1.25	4.01	20.05
14	6	1.25 1.91 1.25	4.41	26.46
15	7	0.75 1.91 0.75	3.41	23.87
16	3	2.30 ~ 2.75 0.79 ~ 0.66 2.30 ~ 2.75	5.70	17.34
17	8	0.50 0.20	0.70	5.60
18	10	1.75	1.75	17.50
19	3	3.90	3.90	11.70
20	12	1.05 0.20	1.50	15.00
21	4	0.20 1.91 0.20	2.31	9.24
22	6	0.20 0.40 0.25 0.25	1.10	6.60
23	27	0.035 0.035 0.09	0.21	5.67
24	8	0.28 0.15 0.10 0.15	1.06	8.48
		TOTAL LENGTH		778.77

778.77 x 1.21 = 942.31 Kg.

STR. 900–300

Pos.	No.	FORM	UNIT LENG.	LENG.
1	10	0.50 6.43 0.50	7.43	74.30
1a	—		—	—
2	9	0.20 7.33	7.53	67.77
3	9	0.35 3.90 0.20	4.45	40.05
4	2x7	0.50 3.37	3.87	54.18
5	2x6	5.60	5.60	67.20
5a	—		—	—
6	2x4	0.20 1.33 7.21	8.74	69.92
7	2x3	0.20 4.35	4.55	27.30
8	7	1.88 ~ 2.24 1.26 ~ 0.60 1.88 ~ 2.24	5.05	35.35
9	6	1.53 ~ 1.88 1.91 ~ 1.26 1.53 ~ 1.88	5.00	30.00
9a	—		—	—
9b	—		—	—
10	17	1.53 1.91 1.53	4.97	84.49
10a	—		—	—
10b	—		—	—
11	8	0.85 ~ 1.53 1.91 0.85 ~ 1.53	4.29	34.32
12	23	0.85 1.91 0.85	3.61	83.03
13	5	0.85 ~ 1.25 1.91 0.85 ~ 1.25	4.01	20.05
14	6	1.25 1.91 1.25	4.41	26.46
15	7	0.75 1.91 0.75	3.41	23.87
16	3	2.30 ~ 2.75 0.79 ~ 0.66 2.30 ~ 2.75	5.78	17.34
17	8	0.50 0.20	0.70	5.60
18	10	1.75	1.75	17.50
19	3	3.90	3.90	11.70
20	12	1.05 0.20	1.25	15.00
21	4	0.20 1.91 0.20	2.31	9.24
22	6	0.20 0.40 0.25 0.25	1.10	6.60
23	27	0.035 0.035 0.09	0.21	5.67
24	8	0.28 0.15 0.10 0.15	1.06	8.48
		TOTAL LENGTH		835.42

835.42 x 1.21 = 1010.86 Kg.

STR. 900–350

Pos.	No.	FORM	UNIT LENG.	LENG.
1	10	0.50 6.58 0.50	7.58	75.80
1a	—		—	—
2	9	0.20 8.50	8.70	78.30
3	9	0.35 4.10 0.20	4.65	41.85
4	2x7	0.50 3.43	3.93	55.02
5	2x6	5.85	5.85	70.20
5a	—		—	—
6	2x4	0.20 1.53 8.27	10.00	80.00
7	2x3	0.20 4.55	4.75	28.50
8	7	2.00 ~ 2.43 1.26 ~ 0.60 2.00 ~ 2.43	5.36	37.52
9	6	1.58 ~ 2.00 1.91 ~ 1.26 1.58 ~ 2.00	5.17	31.02
9a	—		—	—
9b	—		—	—
10	17	1.58 1.91 1.58	5.07	86.19
10a	—		—	—
10b	—		—	—
11	8	0.85 ~ 1.58 1.91 0.85 ~ 1.58	4.34	34.72
12	27	0.25 1.91 0.25	3.61	97.47
13	5	0.85 ~ 1.25 1.91 0.85 ~ 1.25	4.01	20.05
14	7	1.25 1.91 1.25	4.41	30.87
15	7	0.75 1.91 0.75	3.41	23.87
16	3	2.49 ~ 2.94 0.78 ~ 0.66 2.49 ~ 2.94	6.15	18.45
17	8	0.50 0.20	0.70	5.60
18	10	1.75	1.75	17.50
19	3	3.90	3.90	11.70
20	12	1.05 0.20	1.25	15.00
21	4	0.20 1.91 0.20	2.31	9.24
22	6	0.20 0.40 0.25 0.25	1.10	6.60
23	27	0.035 0.035 0.09	0.21	5.67
24	8	0.28 0.15 0.10 0.15	1.06	8.48
		TOTAL LENGTH		889.62

889.62 x 1.21 = 1076.44 Kg.

ALL BARS ARE Φ16 (1.21 Kg/m)

REFERENCE DWGS: For plan & section see dwg. No. 11/1/1/01

For reinforcement see dwgs. No. 11/1/3/01 TO 11/1/3/03

For bars with varidble unit length see note under the same title at dwg. No. 20/2/1/0

Scale:	IRRIGATION & DRAINAGE STANDARDS		
Date:	DWG. No. 11/1/3/14	RECTANGULAR INCLINED DROP LIST OF REINFORCEMENT STR. 900–150 TO 900–350	
Approved:	Sheet No. 18 of 32	Rev. No.	

ISLAMIC REPUBLIC OF IR
MINISTRY OF PLAN & BUDJET
TECHNICAL RESEARCH AND STANDARD BUREAU

omoorepeyman.ir

STR. 900_400

Pos.	No.	FORM	UNIT LENG.	LENG.
1	10	0.50 — 6.68 — 0.50	7.68	76.80
1a	—		—	
2	9	0.20 — 9.67	9.87	88.83
3	9	0.35 — 4.20 — 0.20	4.75	42.75
4	2x7	0.50 — 3.43	3.93	55.02
5	2x7	6.05	6.05	84.70
5a	—		—	—
6	2x4	0.20 — 1.63 — 9.33	11.16	89.28
7	2x3		4.85	29.10
8	7	1.26 ~ 0.60	5.39	37.73
9	6	1.91 ~ 1.26	5.25	31.50
9a	—		—	—
9b	—		—	—
10	18	1.63 — 1.91 — 1.63	5.17	93.06
10a	—		—	—
10b	—	1.91	—	—
11	9	0.85 ~ 1.63 — 1.91 — 0.85 ~ 1.63	4.39	39.51
12	31	0.85 — 1.91 — 0.85	3.61	111.91
13	5	0.85 ~ 1.25 — 1.91 — 0.85 ~ 1.25	4.01	20.05
14	7	1.25 — 1.91 — 1.25	4.41	30.87
15	7	0.75 — 0.75	3.41	23.87
16	3	2.49 ~ 2.94 — 0.78 ~ 0.66 — 2.49 ~ 2.94	6.15	18.45
17	8	0.50 — 0.20	0.70	5.60
18	10	1.75	1.75	17.50
19	3	3.90	3.90	11.70
20	12	1.05 — 0.20	1.25	15.00
21	4	0.20 — 1.91 — 0.20	2.31	9.24
22	6	0.20 — 0.40 — 0.25 — 0.25	1.10	6.60
23	27	0.035 — 0.035 — 0.09	0.21	5.67
24	8	0.15 — 0.28 — 0.10 — 0.15	1.06	8.48
		TOTAL LENGTH	953.22	
953.22	x	1.21	=	1153.40 Kg

STR. 1000_100

Pos.	No.	FORM	UNIT LENG.	LENG.
1	10	0.50 — 5.75 — 0.60	6.85	68.50
1a	—		—	—
2	9	0.20 — 2.35	2.55	22.95
3	9	0.35 — 3.45 — 0.20	4.00	36.00
4	2x6	0.60 — 3.29	3.89	46.68
5	2x5	4.55	4.55	45.50
5a	—		—	—
6	2x4	0.20 — 0.75 — 2.79	3.74	29.92
7	2x3	0.20 — 3.90	4.10	24.60
8	7	1.64 ~ 1.96 — 1.26 ~ 0.60 — 1.64 ~ 1.96	4.53	31.71
9	6	1.33 ~ 1.64 — 1.91 ~ 1.26 — 1.33	4.56	27.36
9a	—		—	—
9b	—		—	—
10	14	1.33 — 1.91 — 1.33	4.57	63.98
10a	—		—	—
10b	—		—	—
11	6	0.85 ~ 1.33 — 1.91 — 0.85 ~ 1.33	4.09	24.54
12	4	0.85 — 1.91 — 0.85	3.61	14.44
13	5	0.85 ~ 1.30 — 1.91 — 0.85 ~ 1.30	4.06	20.30
14	4	1.30 — 1.91 — 1.30	4.51	18.04
15	7	0.80 — 1.91 — 0.80	3.51	24.57
16	3	2.02 ~ 2.56 — 0.84 ~ 0.66 — 2.02 ~ 2.56	5.33	15.99
17	8	0.60 — 0.20	0.80	6.40
18	12	1.90	1.90	22.80
19	3	4.00	4.00	12.00
20	12	1.10 — 0.20	1.30	15.60
21	4	0.20 — 1.91 — 0.20	2.31	9.24
22	6	0.20 — 0.40 — 0.25 — 0.25	1.10	6.60
23	27	0.035 — 0.035 — 0.09	0.21	5.67
24	8	0.09 — 0.23 — 0.10 — 0.09	0.84	6.72
		TOTAL LENGTH	600.11	
600.11	x	1.21	=	726.13 Kg

STR. 1000_150

Pos.	No.	FORM	UNIT LENG.	LENG.
1	10	0.50 — 6.05 — 0.60	7.15	71.50
1a	—		—	—
2	9	0.20 — 3.64	3.84	34.56
3	9	0.35 — 3.55 — 0.20	4.10	36.90
4	2x6	0.60 — 3.34	3.94	47.28
5	2x6	5.05	5.05	60.60
5a			—	—
6	2x4	0.20 — 0.85 — 3.85	4.90	39.20
7	2x3	0.20 — 4.00	4.20	25.20
8	7	1.79 ~ 2.15 — 1.26 ~ 0.60 — 1.79 ~ 2.15	4.87	34.09
9	6	1.43 ~ 1.79 — 1.91 ~ 1.26 — 1.43 ~ 1.79	4.81	28.86
9a	—		—	—
9b	—		—	—
10	15	1.43 — 1.91 — 1.43	4.77	71.55
10a	—		—	—
10b	—		—	—
11	7	0.85 ~ 1.43 — 1.91 — 0.85 ~ 1.43	4.19	29.33
12	9	0.85 — 1.91 — 0.85	3.61	32.49
13	5	0.85 ~ 1.30 — 1.91 — 0.85 ~ 1.30	4.06	20.30
14	4	1.30 — 1.91 — 1.30	4.51	18.04
15	7	0.80 — 1.91 — 0.80	3.51	24.57
16	3	2.21 ~ 2.76 — 0.84 ~ 0.66 — 2.21 ~ 2.76	5.72	17.16
17	8	0.60 — 0.20	0.80	6.40
18	12	1.90	1.90	22.80
19	3	4.00	4.00	12.00
20	12	1.10 — 0.20	1.30	15.60
21	4	0.20 — 1.91 — 0.20	2.31	9.24
22	6	0.20 — 0.40 — 0.25 — 0.25	1.10	6.60
23	27	0.035 — 0.035 — 0.09	0.21	5.67
24	8	0.15 — 0.28 — 0.10 — 0.15	1.06	8.48
		TOTAL LENGTH	678.42	
678.42	x	1.21	=	820.89 Kg

STR. 1000_200

Pos.	No.	FORM	UNIT LENG.	LENG.
1	10	0.50 — 6.25 — 0.60	7.35	73.50
1a	—		—	—
2	9	0.20 — 4.78	4.98	44.82
3	9	0.35 — 3.70 — 0.20	4.25	38.25
4	2x7	0.60 — 3.40	4.00	56.00
5	2x6	5.45	5.45	65.40
5a	—		—	—
6	2x4	0.20 — 1.00 — 4.86	6.06	48.48
7	2x3	0.20 — 4.15	4.35	26.10
8	7	1.93 ~ 2.33 — 1.26 ~ 0.80 — 1.93 ~ 2.33	5.19	36.33
9	6	1.53 ~ 1.93 — 1.91 ~ 1.26 — 1.53 ~ 1.93	5.05	30.30
9a	—		—	—
9b	—		—	—
10	16	1.53 — 1.91 — 1.53	4.97	79.52
10a	—		—	—
10b	—		—	—
11	8	0.85 ~ 1.53 — 1.91 — 0.85 ~ 1.53	4.29	34.32
12	13	0.85 — 1.91 — 0.85	3.61	46.93
13	5	0.85 ~ 1.30 — 1.91 — 0.85 ~ 1.30	4.06	20.30
14	5	1.30 — 1.91 — 1.30	4.51	22.55
15	7	0.80 — 1.91 — 0.80	3.51	24.57
16	3	2.39 ~ 2.95 — 0.81 ~ 0.66 — 2.39 ~ 2.95	6.08	18.24
17	8	0.60 — 0.20	0.80	6.40
18	12	1.90	1.90	22.80
19	3	4.00	4.00	12.00
20	12	1.10 — 0.20	1.30	15.60
21	4	0.20 — 1.91 — 0.20	2.31	9.24
22	6	0.20 — 0.40 — 0.25 — 0.25	1.10	6.60
23	27	0.035 — 0.035 — 0.09	0.21	5.67
24	8	0.15 — 0.28 — 0.10 — 0.15	1.06	8.48
		TOTAL LENGTH	752.40	
752.40	x	1.21	=	910.40 Kg

STR. 1000_250

Pos.	No.	FORM	UNIT LENG.	LENG.
1	10	0.50 — 6.45 — 0.60	7.55	75.50
1a	—		—	—
2	9	0.20 — 6.10	6.30	56.70
3	9	0.35 — 3.85 — 0.20	4.40	39.60
4	2x7	0.60 — 3.43	4.03	56.42
5	2x6	5.75	5.75	69.00
5a	—		—	—
6	2x4	0.20 — 1.15 — 5.98	7.33	58.64
7	2x3	0.20 — 4.30	4.50	27.00
8	7	2.00 ~ 2.43 — 1.26 ~ 0.60 — 2.00 ~ 2.43	5.36	37.52
9	6	1.58 ~ 2.00 — 1.91 1.26 — 1.58 ~ 2.00	5.17	31.02
9a	—		—	—
9b	—		—	—
10	17	1.58 — 1.91 — 1.58	5.07	86.19
10a	—		—	—
10b	—		—	—
11	8	0.85 ~ 1.58 — 1.91 — 0.85 ~ 1.58	4.34	34.72
12	17	0.85 — 1.91 — 0.85	3.61	61.37
13	5	0.85 ~ 1.30 — 1.91 — 0.85 ~ 1.30	4.06	20.30
14	5	1.30 — 1.91 — 1.30	4.51	22.55
15	7	0.80 — 1.91 — 0.80	3.51	24.57
16	3	2.49 ~ 3.05 — 0.81 ~ 0.66 — 2.49 ~ 3.05	6.28	18.84
17	8	0.60 — 0.20	0.80	6.40
18	12	1.90	1.90	22.80
19	3	4.00	4.00	12.00
20	12	1.10 — 0.20	1.30	15.60
21	4	0.20 — 1.91 — 0.20	2.31	9.24
22	6	0.20 — 0.40 — 0.25 — 0.25	1.10	6.60
23	27	0.035 — 0.035 — 0.09	0.21	5.67
24	8	0.15 — 0.28 — 0.10 — 0.15	1.06	8.48
		TOTAL LENGTH	806.73	
806.73	x	1.21	=	976.14 Kg

ALL BARS ARE ϕ14 (1.21 Kg/m)

REFERENCE DWGS: For plan & section see dwg. No. 11/1/1/01
For reinforcement see dwgs. No. 11/1/3/01 TO 11/1/3/03
For bars with various unit length see note under the same title at dwg. No. 20/2/1/01

Scale:
Date:
Approved:

IRRIGATION & DRAINAGE STANDARDS

DWG. No. 11/1/3/15
Sheet No. 19 of 32 Rev. No.

RECTANGULAR INCLINED DROP
LIST OF REINFORCEMENT
STR. 900_400 TO 1000_250

ISLAMIC REPUBLIC OF IRAN
MINISTRY OF PLAN & BUDJET
TECHNICAL RESEARCH AND STANDARD BUREAU

omoorepeyman.ir

STR. 1000_300

Pos.	Nº.	FORM	UNIT LENG.	LENG.
1	10	0.50 / 6.60 / 0.60	7.70	77.00
1a	—		—	—
2	9	0.20 / 7.33	7.53	67.77
3	9	0.35 / 4.00 / 0.20	4.55	40.95
4	2x8	0.60 / 3.46	4.06	64.96
5	2x7	6.00	6.00	84.00
5a	—		—	—
6	2x4	0.20 / 1.30 / 7.10	8.60	68.80
7	2x3	0.20 / 4.45	4.65	27.90
8	7	2.08 2.52 / 1.26 ~ 0.60 / 2.08 2.52	5.53	38.71
9	6	1.63 2.08 / 1.91 ~ 1.26 / 1.63 2.08	5.30	31.80
9a	—		—	—
9b	—		—	—
10	18	1.63 / 1.91 / 1.63	5.17	93.06
10a	—		—	—
10b	—		—	—
11	9	0.85 1.63 / 1.91 / 0.85 1.63	4.39	39.51
12	22	0.85 / 1.91 / 0.85	3.61	79.42
13	5	0.85 1.30 / 1.91 / 0.85 1.30	4.06	20.30
14	6	1.30 / 1.91 / 1.30	4.51	27.06
15	7	0.80 / 1.91 / 0.80	3.51	24.57
16	3	2.50 3.15 / 0.80 ~ 0.66 / 2.50 3.15	6.46	19.38
17	8	0.60 / 0.20	0.80	6.40
18	12	1.90	1.90	22.80
19	3	4.00	4.00	12.00
20	12	1.10 / 0.20	1.30	15.60
21	4	0.20 / 1.91 / 0.20	2.31	9.24
22	6	0.20 / 0.40 / 0.25 / 0.25	1.10	6.60
23	27	0.035 0.035 / 0.09	0.21	5.67
24	8	0.33 / 0.22 / 0.10 / 0.22	1.30	10.40
		TOTAL LENGTH		839.90

839.90 x 1.21 = 1081.62 Kg

STR. 1000_350

Pos.	Nº.	FORM	UNIT LENG.	LENG.
1	10	0.50 / 6.75 / 0.60	7.85	78.50
1a	—		—	—
2	9	0.20 / 8.50	8.70	78.30
3	9	0.35 / 4.20 / 0.20	4.75	42.75
4	2x8	0.60 / 3.50	4.10	65.60
5	2x7	6.25	6.25	87.50
5a	—		—	—
6	2x4	0.20 / 1.50 / 8.16	9.86	78.88
7	2x3	0.20 / 4.65	4.85	29.10
8	7	2.15 2.62 / 1.26 ~ 0.60 / 2.15 2.62	5.70	39.90
9	6	1.68 2.15 / 1.91 ~ 1.26 / 1.68 2.15	5.42	32.52
9a	—		—	—
9b	—		—	—
10	18	1.68 / 1.91 / 1.68	5.27	94.86
10a	—		—	—
10b	—		—	—
11	9	0.85 1.68 / 1.91 / 0.85 1.68	4.44	39.96
12	26	0.85 / 1.91 / 0.85	3.61	93.86
13	5	0.85 1.30 / 1.91 / 0.85 1.30	4.06	20.30
14	7	1.30 / 1.91 / 1.30	4.51	31.57
15	7	0.80 / 1.91 / 0.80	3.51	24.57
16	3	2.58 3.25 / 0.80 ~ 0.66 / 2.58 3.25	6.66	19.98
17	8	0.60 / 0.20	0.80	6.40
18	12	1.90	1.90	22.80
19	3	4.00	4.00	12.00
20	12	1.10 / 0.20	1.30	15.60
21	4	0.20 / 1.91 / 0.20	2.31	9.24
22	6	0.20 / 0.40 / 0.25 / 0.25	1.10	6.60
23	27	0.035 0.035 / 0.09	0.21	5.67
24	8	0.33 / 0.22 / 0.10 / 0.22	1.30	10.40
		TOTAL LENGTH		946.86

946.86 x 1.21 = 1145.70 Kg

STR. 1000_400

Pos.	Nº.	FORM	UNIT LENG.	LENG.
1	10	0.50 / 6.85 / 0.60	7.95	79.50
1a	—		—	—
2	9	0.20 / 9.67	9.87	88.83
3	9	0.35 / 4.30 / 0.20	4.85	43.65
4	2x9	0.60 / 3.53	4.13	74.34
5	2x7	6.45	6.45	90.30
5a	—		—	—
6	2x4	0.20 / 1.80 / 9.22	11.02	88.16
7	2x3	0.20 / 4.75	4.95	29.70
8	7	2.22 2.71 / 1.26 ~ 0.60 / 2.22 2.71	5.86	41.02
9	6	1.73 2.22 / 1.91 ~ 1.26 / 1.73 2.22	5.54	33.24
9a	—		—	—
9b	—		—	—
10	19	1.73 / 1.91 / 1.73	5.37	102.03
10a	—		—	—
10b	—		—	—
11	10	0.85 1.73 / 1.91 / 0.85 1.73	4.49	44.90
12	30	0.85 / 1.91 / 0.85	3.61	108.30
13	5	0.85 1.30 / 1.91 / 0.85 1.30	4.06	20.30
14	7	1.30 / 1.91 / 1.30	4.51	31.57
15	7	0.80 / 1.91 / 0.80	3.51	24.57
16	3	2.77 3.34 / 0.80 ~ 0.66 / 2.77 3.34	6.84	20.52
17	8	0.60 / 0.20	0.80	6.40
18	12	1.90	1.90	22.80
19	3	4.00	4.00	12.00
20	12	1.10 / 0.20	1.30	15.60
21	4	0.20 / 1.91 / 0.20	2.31	9.24
22	6	0.20 / 0.40 / 0.25 / 0.25	1.10	6.60
23	27	0.035 0.035 / 0.09	0.21	5.67
24	8	0.33 / 0.22 / 0.10 / 0.22	1.30	10.40
		TOTAL LENGTH		1009.64

1009.64 x 1.21 = 1221.66 Kg

STR. 1200_100

Pos.	Nº.	FORM	UNIT LENG.	LENG.
1	11	0.50 / 6.25 / 0.60	7.35	80.85
1a	—		—	—
2	10	0.20 / 2.35	2.55	25.50
3	10	0.35 / 3.55 / 0.20	4.10	41.00
4	2x6	0.60 / 3.60	4.20	50.40
5	2x6	4.75	4.75	57.00
5a	—		—	—
6	2x4	0.20 / 0.85 / 2.79	3.84	30.72
7	2x4	0.20 / 4.00	4.20	33.60
8	7	2.05 1.72 / 1.41 ~ 0.75 / 2.05 1.72	4.85	33.95
9	7	1.72 1.38 / 2.06 ~ 1.41 / 1.72 1.38	4.84	33.88
9a	—		—	—
9b	—		—	—
10	15	1.38 / 2.06 / 1.38	4.82	72.30
10a	—		—	—
10b	—		—	—
11	6	0.90 1.38 / 2.06 / 0.90 1.38	4.34	26.04
12	4	0.90 / 2.06 / 0.90	3.86	15.44
13	5	0.90 1.35 / 2.06 / 0.90 1.35	4.31	21.55
14	4	1.35 / 2.06 / 1.35	4.76	19.04
15	7	0.85 / 2.06 / 0.85	3.76	26.32
16	3	2.11 2.64 / 1.01 ~ 0.81 / 2.11 2.64	5.66	16.98
17	9	0.60 / 0.20	0.80	7.20
18	12	1.95	1.95	23.40
19	3	4.35	4.35	13.05
20	14	1.20 / 0.20	1.40	19.60
21	4	0.20 / 2.06 / 0.20	2.46	9.84
22	6	0.20 / 0.40 / 0.25 / 0.25	1.10	6.60
23	27	0.035 0.035 / 0.09	0.21	5.67
24	8	0.28 / 0.15 / 0.10 / 0.15	1.06	8.48
		TOTAL LENGTH		678.41

678.41 x 1.21 = 820.88 Kg

STR. 1200_150

Pos.	Nº.	FORM	UNIT LENG.	LENG.
1	11	0.50 / 6.50 / 0.60	7.60	83.60
1a	—		—	—
2	10	0.20 / 3.64	3.84	38.40
3	10	0.35 / 3.70 / 0.20	4.25	42.50
4	2x7	0.60 / 3.65	4.25	59.50
5	2x6	5.20	5.20	62.40
5a	—		—	—
6	2x4	0.20 / 1.00 / 3.85	5.05	40.40
7	2x4	0.20 / 4.15	4.35	34.80
8	7	2.24 1.86 / 1.41 ~ 0.75 / 2.24 1.86	5.18	36.26
9	7	1.86 1.48 / 2.06 ~ 1.41 / 1.86 1.48	5.08	35.56
9a	—		—	—
9b	—		—	—
10	16	1.48 / 2.06 / 1.48	5.02	80.32
10a	—		—	—
10b	—		—	—
11	7	0.90 1.48 / 2.06 / 0.90 1.48	4.44	31.08
12	9	0.90 / 2.06 / 0.90	3.86	34.74
13	5	0.90 1.35 / 2.06 / 0.90 1.35	4.31	21.55
14	5	1.35 / 2.06 / 1.35	4.76	23.80
15	7	0.85 / 2.06 / 0.85	3.76	26.32
16	3	2.30 2.84 / 1.00 ~ 0.81 / 2.30 2.84	6.05	18.15
17	9	0.60 / 0.20	0.80	7.20
18	12	1.95	1.95	23.40
19	3	4.35	4.35	13.05
20	14	1.20 / 0.20	1.40	19.60
21	4	0.20 / 2.06 / 0.20	2.46	9.84
22	6	0.20 / 0.40 / 0.25 / 0.25	1.10	6.60
23	27	0.035 0.035 / 0.09	0.21	5.67
24	8	0.28 / 0.15 / 0.10 / 0.15	1.06	8.48
		TOTAL LENGTH		763.22

763.22 x 1.21 = 923.50 Kg

ALL BARS ARE Φ 14 (1.21 Kg/m)

REFERENCE DWGS: For plan & sec... see dwg. Nº. 11/1/1/01
For reinforcem... see dwg. Nº. 11/1/3/01 TO 11/1/3/03
For bars with variable unit length see note under the same title at dwg. Nº. 20/2/1/01

Scale:	IRRIGATION & DRAINAGE STANDARDS		
Date:	DWG. Nº. 11/1/3/16		RECTANGULAR INCLINED DROP LIST OF REINFORCEMENT
Approved:	Sheet Nº. 20 of 32	Rev. Nº.	STR. 1000_300 TO 1200_150

ISLAMIC REPUBLIC OF IRAN
MINISTRY OF PLAN & BUDJET
TECHNICAL RESEARCH AND STANDARD BUREAU

omoorepeyman.ir

STR. 1200_200

Pos.	No.	FORM	UNIT LENG.	LENG.
1	11	0.50 6.75 0.50	7.85	86.35
1a	—		—	—
2	10	0.20 4.87	5.07	50.70
3	10	0.35 3.80 0.20	4.35	43.50
4	2x7	0.60 3.70	4.30	60.20
5	2x6	5.65	5.65	67.80
5a	—		—	—
6	2x4	0.20 1.10 4.86	6.16	49.28
7	2x4	0.20 4.25	4.45	35.60
8	7	2.00 2.43 1.41 ~ 0.75 2.00 2.43	5.51	38.57
9	7	1.58 2.00 2.06 ~ 1.41 1.58 2.00	5.32	37.24
9a	—		—	—
9b	—		—	—
10	17	1.58 2.06 1.58	5.22	88.74
10a	—		—	—
10b	—		—	—
11	8	0.90 1.58 2.06 0.90 1.58	4.54	36.32
12	13	0.90 2.06 0.90	3.86	50.18
13	5	0.90 1.35 2.06 0.90 1.35	4.31	21.55
14	5	1.35 2.06 1.35	4.76	23.80
15	7	0.85 2.06 0.85	3.76	26.32
16	3	2.49 3.03 0.99 ~ 0.81 2.49 3.03	6.42	19.26
17	9	0.60 0.20	0.80	7.20
18	12	1.95	1.95	23.40
19	3	4.35	4.35	13.05
20	14	1.20 0.20	1.40	19.60
21	4	0.20 2.06 0.20	2.46	9.84
22	6	0.20 0.40 0.25 0.25	1.10	6.60
23	27	0.035 0.035 0.09	0.21	5.67
24	8	0.28 0.15 0.10 0.15	1.06	8.48
		TOTAL LENGTH	829.25	

829.25 x 1.21 = 1003.39 Kg

STR. 1200_250

Pos.	No.	FORM	UNIT LENG.	LENG.
1	11	0.50 6.95 0.50	8.05	88.55
1a	—		—	—
2	10	0.20 6.10	6.30	63.00
3	10	0.35 3.95 0.20	4.50	45.00
4	2x8	0.60 3.73	4.33	69.28
5	2x7	5.95	5.95	83.30
5a	—		—	—
6	2x4	0.20 1.25 5.98	7.43	59.44
7	2x4	0.20 4.40	4.60	36.80
8	7	2.08 2.52 1.41 ~ 0.75 2.08 2.52	5.68	39.76
9	7	1.63 2.08 2.06 ~ 1.41 1.63 2.08	5.45	38.15
9a	—		—	—
9b	—		—	—
10	18	1.63 2.06 1.63	5.32	95.76
10a	—		—	—
10b	—		—	—
11	8	0.90 1.63 2.06 0.90 1.63	4.59	36.72
12	17	0.90 2.06 0.90	3.86	65.62
13	5	0.90 1.35 2.06 0.90 1.35	4.31	21.55
14	6	1.35 2.06 1.35	4.76	23.80
15	7	0.85 2.06 0.85	3.76	26.32
16	3	2.58 3.13 0.98 ~ 0.81 2.58 3.13	6.61	19.83
17	9	0.60 0.20	0.80	7.20
18	12	1.95	1.95	23.40
19	3	4.35	4.35	13.05
20	14	1.20 0.20	1.40	19.60
21	4	0.20 2.06 0.20	2.46	9.84
22	6	0.20 0.40 0.25 0.25	1.10	6.60
23	27	0.035 0.035 0.09	0.21	5.67
24	8	0.33 0.22 0.10 0.22	1.30	10.40
		TOTAL LENGTH	908.64	

908.64 x 1.21 = 1099.45 Kg

STR. 1200_350

Pos.	No.	FORM	UNIT LENG.	LENG.
1	11	0.50 7.10 0.60	8.20	90.20
1a	—		—	—
2	10	0.20 7.33	7.53	75.30
3	10	0.35 4.15 0.20	4.70	47.00
4	2x8	0.60 3.74	4.34	69.44
5	2x7	6.20	6.20	86.80
5a	—		—	—
6	2x4	0.20 1.45 7.10	8.75	70.00
7	2x4	0.20 4.60	4.80	38.40
8	7	2.10 2.52 1.41 ~ 0.75 2.10 2.52	5.70	39.90
9	7	1.68 2.10 2.06 ~ 1.41 1.63 2.10	5.47	38.29
9a	—		—	—
9b	—		—	—
10	18	1.68 2.06 1.68	5.42	97.56
10a	—		—	—
10b	—		—	—
11	9	0.90 1.68 2.06 0.90 1.68	4.64	41.76
12	22	0.90 2.06 0.90	3.86	84.92
13	5	0.90 1.35 2.06 0.90 1.35	4.31	21.55
14	7	1.35 2.06 1.35	4.76	33.32
15	7	0.85 2.06 0.85	3.76	26.32
16	3	2.58 3.13 0.98 ~ 0.81 2.58 3.13	6.61	19.83
17	9	0.60 0.20	0.80	7.20
18	12	1.95	1.95	23.40
19	3	4.35	4.35	13.05
20	14	1.20 0.20	1.40	19.60
21	4	0.20 2.06 0.20	2.46	9.84
22	6	0.20 0.40 0.25 0.25	1.10	6.60
23	27	0.035 0.035 0.09	0.21	5.67
24	8	0.33 0.22 0.10 0.22	1.30	10.40
		TOTAL LENGTH	976.35	

976.35 x 1.21 = 1181.38 Kg

STR. 1200_350

Pos.	No.	FORM	UNIT LENG.	LENG.
1	11	0.50 7.25 0.50	8.35	91.85
1a	—			
2	10	0.20 8.50	8.70	87.00
3	10	0.35 4.30 0.20	4.85	48.50
4	2x8	0.60 3.77	4.37	69.92
5	2x7	6.45	6.45	90.30
5a	—		—	—
6	2x4	0.20 1.60 8.16	9.96	79.68
7	2x4	0.20 4.75	4.95	39.60
8	7	2.17 2.62 1.41 ~ 0.75 2.17 2.62	5.87	41.09
9	7	1.73 2.17 2.06 ~ 1.41 1.73 2.17	5.64	39.48
9a	—		—	—
9b	—		—	—
10	19	1.73 2.06 1.73	5.52	104.88
10a	—		—	—
10b	—		—	—
11	9	0.90 1.73 2.06 0.90 1.73	4.69	42.21
12	26	0.90 2.06 0.90	3.86	100.36
13	5	0.90 1.35 2.06 0.90 1.35	4.31	21.55
14	7	1.35 2.06 1.35	4.76	33.32
15	7	0.85 2.06 0.85	3.76	26.32
16	3	2.68 3.23 0.98 ~ 0.81 2.68 3.23	6.81	20.43
17	9	0.60 0.20	0.80	7.20
18	12	1.95	1.95	23.40
19	3	4.35	4.35	13.05
20	14	1.20 0.20	1.40	19.60
21	4	0.20 2.06 0.20	2.46	9.84
22	6	0.20 0.40 0.25 0.25	1.10	6.60
23	27	0.035 0.035 0.09	0.21	5.67
24	8	0.33 0.22 0.10 0.22	1.30	10.40
		TOTAL LENGTH	1032.25	

1032.25 x 1.21 = 1249.02 Kg

STR. 1200_400

Pos.	No.	FORM	UNIT LENG.	LENG.
1	11	0.50 7.35 0.60	8.45	92.95
1a	—		—	—
2	10	0.20 9.67	9.87	98.70
3	10	0.35 4.45 0.20	5.00	50.00
4	2x10	0.60 3.83	4.43	88.60
5	2x8	6.65	6.65	106.40
5a	—		—	—
6	2x4	0.20 1.75 9.22	11.17	89.36
7	2x4	0.20 4.90	5.10	40.80
8	7	2.29 2.71 1.41 ~ 0.75 2.29 2.71	6.08	42.56
9	7	1.78 2.29 2.12 ~ 1.41 1.78 2.29	5.84	40.88
9a	—		—	—
9b	—		—	—
10	20	1.78 2.12 1.78	5.68	113.60
10a	—		—	—
10b	—		—	—
11	10	0.93 1.78 2.06 ~ 2.12 0.93 1.78	4.80	48.00
12	30	0.93 2.06 0.93	3.92	117.60
13	5	0.93 1.38 2.06 0.93 1.38	4.37	21.85
14	8	1.38 2.06 1.38	4.82	38.56
15	7	0.88 2.06 0.88	3.82	26.74
16	3	2.77 3.32 0.97 ~ 0.81 2.77 3.32	6.98	20.94
17	9	0.60 0.20	0.80	7.20
18	12	1.95	1.95	23.40
19	3	4.35	4.35	13.05
20	14	1.20 0.20	1.40	19.60
21	4	0.20 2.12 0.20	2.52	10.08
22	6	0.20 0.40 0.25 0.25	1.10	6.60
23	27	0.035 0.035 0.09	0.21	5.67
24	8	0.33 0.22 0.10 0.23	1.30	10.40
		TOTAL LENGTH	1133.54	

1133.54 x 1.21 = 1372.18 Kg

ALL BARS ARE Φ 14 (1.21 Kg/m)

REFERENCE DWGS: For plan & section see dwg. No. 11/1/1/01

For reinforcement see dwgs. No. 11/1/3/01 TO 11/1/3/03

For bars with variable unit length see note under the same title at dwg. No. 20/2/1/01

Scale:

Date:

Approved:

IRRIGATION & DRAINAGE STANDARDS

DWG. No. 11/1/3/17

Sheet No. 21 of 32 Rev. No.

RECTANGULAR INCLINED DROP
LIST OF REINFORCEMENT
STR. 1200_200 TO 1200_400

ISLAMIC REPUBLIC OF IRAN
MINISTRY OF PLAN & BUD.
TECHNICAL RESEARCH AND STANDARD BUREAU

@omoorepeyman.ir

STR. 1400_100

Pos.	No.	FORM	UNIT LENG.	LENG.
1	12	0.50 / 6.35 / 0.60	7.45	89.40
1a	—		—	—
2	10	0.20 / 2.35	2.55	25.50
3	10	0.35 / 3.60 / 0.20	4.15	41.50
4	2x6	0.60 / 3.60	4.20	50.40
5	2x6	4.95	4.95	59.40
5a	—		—	—
6	2x4	0.20 / 0.80 / 2.79	3.79	30.32
7	2x4	0.20 / 4.05	4.25	34.00
8	7	1.79 ~ 2.15 / 1.51 ~ 0.75 / 1.79 ~ 2.15	5.07	35.49
9	7	1.43 ~ 1.79 / 2.21 ~ 1.51 / 1.43 ~ 1.79	5.08	35.56
9a	—		—	—
9b	—		—	—
10	15	1.43 / 2.21 / 1.43	5.07	76.05
10a	—		—	—
10b	—		—	—
11	6	0.90 / 1.43 / 2.21 / 0.90 / 1.43	4.54	27.24
12	4	0.90 / 2.21 / 0.90	4.01	16.04
13	6	0.90 / 1.40 / 2.21 / 0.90 / 1.43	4.51	27.06
14	4	1.40 / 2.21 / 1.40	5.01	20.04
15	7	0.90 / 2.21 / 0.90	4.01	28.07
16	3	2.21 ~ 2.74 / 1.01 ~ 0.81 / 2.21 ~ 2.74	5.86	17.58
17	9	0.60 / 0.20	0.80	7.20
18	12	2.00	2.00	24.00
19	3	4.60	4.60	13.80
20	14	1.25 / 0.20	1.45	20.30
21	4	0.20 / 2.21 / 0.20	2.61	10.44
22	6	0.20 / 0.40 / 0.25 / 0.25	1.10	6.60
23	27	0.035 / 0.035 / 0.09	0.21	5.67
24	8	0.28 / 0.15 / 0.10 / 0.15	1.06	8.48
		TOTAL LENGTH	710.14	

710.14 × 1.21 = 859.27 Kg

STR. 1400_150

Pos.	No.	FORM	UNIT LENG.	LENG.
1	12	0.50 / 6.65 / 0.60	7.75	93.00
1a	—		—	—
2	10	0.20 / 3.64	3.84	38.40
3	10	0.35 / 3.80 / 0.20	4.35	63.50
4	2x7	0.60 / 3.65	4.25	59.50
5	2x6	5.45	5.45	65.40
5a	—		—	—
6	2x4	0.20 / 1.00 / 3.85	5.05	40.40
7	2x4	0.20 / 4.25	4.45	35.60
8	7	1.93 ~ 2.33 / 1.51 ~ 0.75 / 1.93 ~ 2.33	5.39	37.73
9	7	1.53 ~ 1.93 / 2.21 ~ 1.51 / 1.53 ~ 1.93	5.32	37.24
9a	—		—	—
9b	—		—	—
10	16	1.53 / 2.21 / 1.53	5.27	84.32
10a	—		—	—
10b			—	—
11	7	0.90 / 1.53 / 2.21 / 0.90 / 1.53	4.64	32.48
12	8	0.90 / 2.21 / 0.90	4.01	32.08
13	6	0.90 / 1.40 / 2.21 / 0.90 / 1.40	4.51	27.06
14	5	1.40 / 2.21 / 1.40	5.01	25.05
15	7	0.90 / 2.21 / 0.90	4.01	28.07
16	3	2.39 ~ 2.94 / 0.99 ~ 0.81 / 2.39 ~ 2.94	6.23	18.69
17	9	0.60 / 0.20	0.80	7.20
18	12	2.00	2.00	24.00
19	3	4.60	4.60	13.80
20	14	1.25 / 0.20	1.45	20.30
21	4	0.20 / 2.21 / 0.20	2.61	10.44
22	6	0.20 / 0.40 / 0.25 / 0.25	1.10	6.60
23	27	0.035 / 0.035 / 0.09	0.21	5.67
24	8	0.28 / 0.15 / 0.10 / 0.15	1.06	8.48
		TOTAL LENGTH	795.01	

795.01 × 1.21 = 961.96 Kg

STR. 1400_200

Pos.	No.	FORM	UNIT LENG.	LENG.
1	12	0.50 / 6.90 / 0.60	8.00	96.00
1a	—		—	—
2	10	0.20 / 4.87	5.07	50.70
3	10	0.35 / 3.90 / 0.20	4.45	44.50
4	2x7	0.60 / 3.68	4.28	59.92
5	2x7	5.90	5.90	82.60
5a	—		—	—
6	2x4	0.20 / 1.10 / 4.86	6.16	49.28
7	2x4	0.20 / 4.35	4.55	36.40
8	7	2.03 ~ 2.43 / 1.51 ~ 0.75 / 2.03 ~ 2.43	5.59	39.13
9	7	1.63 ~ 2.03 / 2.21 ~ 1.51 / 1.63 ~ 2.03	5.52	38.64
9a	—		—	—
9b	—		—	—
10	18	1.63 / 2.21 / 1.63	5.47	98.46
10a	—		—	—
10b	—		—	—
11	8	0.90 / 1.63 / 2.21 / 0.90 / 1.63	4.74	37.92
12	12	0.90 / 2.21 / 0.90	4.01	48.12
13	6	0.90 / 1.40 / 2.21 / 0.90 / 1.40	4.51	27.06
14	5	1.40 / 2.21 / 1.40	5.01	25.05
15	7	0.90 / 2.21 / 0.90	4.01	28.07
16	3	2.49 ~ 3.03 / 0.99 ~ 0.81 / 2.49 ~ 3.03	6.42	19.26
17	9	0.60 / 0.20	0.80	7.20
18	12	2.00	2.00	24.00
19	3	4.60	4.60	13.80
20	14	1.25 / 0.20	1.45	20.30
21	4	0.20 / 2.21 / 0.20	2.61	10.44
22	6	0.20 / 0.40 / 0.25 / 0.25	1.10	6.60
23	27	0.035 / 0.035 / 0.09	0.21	5.67
24	8	0.28 / 0.15 / 0.10 / 0.15	1.06	8.48
		TOTAL LENGTH	877.60	

877.60 × 1.21 = 1061.90 Kg

STR. 1400_250

Pos.	No.	FORM	UNIT LENG.	LENG.
1	12	0.50 / 7.10 / 0.60	8.20	98.40
1a	—		—	—
2	10	0.20 / 6.10	6.30	63.00
3	10	0.35 / 4.10 / 0.20	4.65	46.50
4	2x8	0.60 / 3.71	4.31	68.96
5	2x7	6.20	6.20	86.80
5a	—		—	—
6	2x4	0.20 / 1.30 / 5.98	7.48	59.84
7	2x4	0.20 / 4.55	4.75	38.00
8	7	2.10 ~ 2.52 / 1.51 ~ 0.75 / 2.10 ~ 2.52	5.75	40.25
9	7	1.68 ~ 2.10 / 2.21 ~ 1.51 / 1.68 ~ 2.10	5.64	39.48
9a	—		—	—
9b	—		—	—
10	18	1.68 / 2.21 / 1.68	5.57	100.26
10a	—		—	—
10b	—		—	—
11	9	0.90 / 1.68 / 2.21 / 0.90 / 1.68	4.79	43.11
12	17	0.90 / 2.21 / 0.90	4.01	68.17
13	6	0.90 / 1.40 / 2.21 / 0.90 / 1.40	4.51	27.06
14	6	1.40 / 2.21 / 1.40	5.01	30.06
15	7	0.90 / 2.21 / 0.90	4.01	28.07
16	3	2.58 ~ 3.13 / 0.98 ~ 0.81 / 2.58 ~ 3.13	6.61	19.83
17	9	0.60 / 0.20	0.80	7.20
18	12	2.00	2.00	24.00
19	3	4.60	4.60	13.80
20	14	1.25 / 0.20	1.45	20.30
21	4	0.20 / 2.21 / 0.20	2.61	10.44
22	6	0.20 / 0.40 / 0.25 / 0.25	1.10	6.60
23	27	0.035 / 0.035 / 0.09	0.21	5.67
24	8	0.33 / 0.22 / 0.10 / 0.22	1.30	10.40
		TOTAL LENGTH	956.20	

956.20 × 1.21 = 1157.00 Kg

STR. 1400_300

Pos.	No.	FORM	UNIT LENG.	LENG.
1	12	0.50 / 7.25 / 0.60	8.35	100.20
1a	—		—	—
2	10	0.20 / 7.33	7.53	75.30
3	10	0.35 / 4.30 / 0.20	4.85	48.50
4	2x8	0.60 / 3.74	4.34	69.44
5	2x7	6.45	6.45	90.30
5a	—		—	—
6	2x4	0.20 / 1.50 / 7.10	8.80	70.40
7	2x4	0.20 / 4.75	4.95	39.60
8	7	2.17 ~ 2.62 / 1.51 ~ 0.75 / 2.17 ~ 2.62	5.92	41.44
9	7	1.73 ~ 2.17 / 2.21 ~ 1.51 / 1.73 ~ 2.17	5.76	40.32
9a	—		—	—
9b	—		—	—
10	19	1.73 / 2.21 / 1.73	5.67	107.73
10a	—		—	—
10b	—		—	—
11	9	0.90 / 1.73 / 2.21 / 0.90 / 1.73	4.84	43.56
12	21	0.90 / 2.21 / 0.90	4.01	84.21
13	6	0.90 / 1.40 / 2.21 / 0.90 / 1.40	4.51	27.06
14	7	1.40 / 2.21 / 1.40	5.01	35.07
15	7	0.90 / 2.21 / 0.90	4.01	28.07
16	3	2.68 ~ 3.23 / 0.98 ~ 0.81 / 2.68 ~ 3.23	6.81	20.43
17	9	0.60 / 0.20	0.80	7.20
18	12	2.00	2.00	24.00
19	3	4.60	4.60	13.80
20	14	1.25 / 0.20	1.45	20.30
21	4	0.20 / 2.21 / 0.20	2.61	10.44
22	6	0.20 / 0.40 / 0.25 / 0.25	1.10	6.60
23	27	0.035 / 0.035 / 0.09	0.21	5.67
24	8	0.33 / 0.22 / 0.10 / 0.22	1.30	10.40
		TOTAL LENGTH	1020.04	

1020.04 × 1.21 = 1234.25 Kg

ALL BARS ARE Φ 14 (1.21 Kg/m)

REFERENCE DWGS: For plan & section see dwg. No. 11/1/1/01

For reinforcement see dwgs. No. 11/1/3/01 TO 11/1/3/03

For bars with variable unit length see note under the same title at dwg. No. 20/2/1/01

Scale:	IRRIGATION & DRAINAGE STANDARDS	
Date:	DWG. No. 11/1/3/18	RECTANGULAR INCLINED DROP LIST OF REINFORCEMENT
Approved:	Sheet No. 22 of 32 Rev. No.	STR. 1400_100 TO 1400_300

ISLAMIC REPUBLIC OF IRAN
MINISTRY OF PLAN & BUD
TECHNICAL RESEARCH AND STANDARD BUREAU

omoorepeyman.ir

STR. 1400_350

Pos.	No.	FORM	UNIT LENG.	LENG.
1	12	0.50 / 7.45 / 0.60	8.55	102.60
1a	—		—	—
2	10	0.20 / 8.50	8.70	87.00
3	10	0.35 / 4.45 / 0.20	5.00	50.00
4	2x9	0.60 / 3.77	4.37	78.66
5	2x8	6.75	6.75	108.00
5a	—		—	—
6	2x4	0.20 / 1.65 / 8.15	10.01	80.08
7	2x4	0.20 / 4.90	5.10	40.80
8	7	2.25 / 2.71 / 0.75 ~ 1.51 / 2.25 / 2.71	6.09	42.63
9	7	1.78 / 2.25 / 1.51 ~ 2.27 / 1.78 / 2.25	5.92	41.44
9a	—		—	—
9b	—		—	—
10	20	1.78 / 2.27 / 1.78	5.83	116.60
10a	—		—	—
10b	—		—	—
11	10	0.93 / 1.78 / 2.21 ~ 2.27 / 0.93 / 1.78	4.95	49.50
12	26	0.93 / 2.21 / 0.93	4.07	105.82
13	6	0.93 / 1.43 / 2.21 / 0.93 / 1.43	4.57	27.42
14	7	1.43 / 2.21 / 1.43	5.07	35.49
15	7	0.93 / 2.21 / 0.93	4.07	28.49
16	3	2.77 / 3.33 / 0.81 ~ 0.97 / 2.77 / 3.33	6.99	20.97
17	9	0.60 / 0.20	0.80	7.20
18	12	2.00	2.00	24.00
19	3	4.60	4.60	13.80
20	14	1.25 / 0.20	1.45	20.30
21	4	0.20 / 2.27 / 0.20	2.67	10.68
22	6	0.20 / 0.40 / 0.25 / 0.25	1.10	6.60
23	27	0.035 / 0.035 / 0.09	0.21	5.67
24	8	0.33 / 0.22 / 0.10 / 0.22	1.30	10.40
		TOTAL LENGTH		1114.15

1114.15 x 1.21 = 1348.12 Kg.

STR. 1400_400

Pos.	No.	FORM	UNIT LENG.	LENG.
1	12	0.50 / 7.55 / 0.60	8.65	103.80
1a	—		—	—
2	10	0.20 / 9.67	9.87	98.70
3	10	0.35 / 4.60 / 0.20	5.15	51.50
4	2x10	0.60 / 3.80	4.40	88.00
5	2x8	6.95	6.95	111.20
5a	—		—	—
6	2x4	0.20 / 1.80 / 9.22	11.22	89.76
7	2x4	0.20 / 5.05	5.25	42.00
8	7	2.32 / 2.81 / 0.75 ~ 1.51 / 2.32 / 2.81	6.26	43.82
9	7	1.83 / 2.32 / 1.51 ~ 2.27 / 1.83 / 2.32	6.04	42.28
9a	—		—	—
9b	—		—	—
10	21	1.83 / 2.27 / 1.83	5.93	124.53
10a	—		—	—
10b	—		—	—
11	11	0.93 / 1.83 / 2.21 ~ 2.27 / 0.93 / 1.83	5.00	55.00
12	30	0.93 / 2.21 / 0.93	4.07	122.10
13	6	0.93 / 1.43 / 2.21 / 0.93 / 1.43	4.57	27.42
14	8	1.43 / 2.21 / 1.43	5.07	40.56
15	7	0.93 / 2.21 / 0.93	4.07	28.49
16	3	0.87 / 3.43 / 0.81 ~ 0.97 / 0.87 / 3.43	7.19	21.57
17	9	0.60 / 0.20	0.80	7.20
18	12	2.00	2.00	24.00
19	3	4.60	4.60	13.80
20	14	1.25 / 0.20	1.45	20.30
21	4	0.20 / 2.27 / 0.20	2.67	10.68
22	6	0.20 / 0.40 / 0.25 / 0.25	1.10	6.60
23	27	0.035 / 0.035 / 0.09	0.21	5.67
24	8	0.33 / 0.22 / 0.10 / 0.22	1.30	10.40
		TOTAL LENGTH		1189.38

1189.38 x 1.21 = 1439.15 Kg.

STR. 1600_100

Pos.	No.	FORM	UNIT LENG.	LENG.
1	12	0.50 / 6.90 / 0.60	8.00	96.00
1a	—		—	—
2	11	0.20 / 2.35	2.55	28.05
3	11	0.35 / 4.00 / 0.20	4.55	50.05
4	2x7	0.60 / 3.93	4.53	63.42
5	2x6	5.40	5.40	64.80
5a	—		—	—
6	2x4	0.20 / 0.80 / 2.68	3.68	29.44
7	2x4	0.20 / 4.45	4.65	37.20
8	8	1.93 / 2.33 / 0.75 ~ 1.51 / 1.93 / 2.33	5.39	43.12
9	8	1.53 / 1.93 / 1.51 ~ 2.21 / 1.53 / 1.93	5.32	42.56
9a	—		—	—
9b	—		—	—
10	16	1.53 / 2.21 / 1.53	5.27	84.32
10a	—		—	—
10b	—		—	—
11	7	0.90 / 1.53 / 2.21 / 0.90 / 1.53	4.64	32.48
12	3	0.90 / 2.21 / 0.90	4.01	12.03
13	6	0.90 / 1.45 / 2.21 / 0.90 / 1.45	4.56	27.36
14	4	1.45 / 2.21 / 1.45	5.11	20.44
15	8	0.95 / 2.21 / 0.95	4.11	32.88
16	3	2.39 / 2.94 / 0.81 ~ 0.99 / 2.39 / 2.94	6.23	18.69
17	9	0.60 / 0.20	0.80	7.20
18	12	2.05	2.05	24.60
19	3	4.70	4.70	14.10
20	14	1.30 / 0.20	1.50	21.00
21	4	0.20 / 2.21 / 0.20	2.61	10.44
22	8	0.20 / 0.40 / 0.25 / 0.25	1.10	8.80
23	34	0.035 / 0.035 / 0.09	0.21	7.14
24	10	0.28 / 0.15 / 0.10 / 0.15	1.06	10.60
		TOTAL LENGTH		786.72

786.72 x 1.21 = 951.93 Kg.

STR. 1600_150

Pos.	No.	FORM	UNIT LENG.	LENG.
1	12	0.50 / 7.20 / 0.60	8.30	99.60
1a	—		—	—
2	11	0.20 / 3.64	3.84	42.24
3	11	0.35 / 4.15 / 0.20	4.70	51.70
4	2x8	0.60 / 3.98	4.58	73.28
5	2x7	5.90	5.90	82.60
5a	—		—	—
6	2x4	0.20 / 0.95 / 3.74	4.89	39.12
7	2x4	0.20 / 4.60	4.80	38.40
8	8	2.08 / 2.52 / 0.75 ~ 1.51 / 2.08 / 2.52	5.73	45.84
9	8	1.63 / 2.08 / 1.51 ~ 2.21 / 1.63 / 2.08	5.57	44.56
9a	—		—	—
9b	—		—	—
10	18	1.63 / 2.21 / 1.63	5.47	98.46
10a	—		—	—
10b	—		—	—
11	8	0.90 / 1.63 / 2.21 / 0.90 / 1.63	4.74	37.92
12	7	0.90 / 2.21 / 0.90	4.01	28.07
13	6	0.90 / 1.45 / 2.21 / 0.90 / 1.45	4.56	27.36
14	5	1.45 / 2.21 / 1.45	5.11	25.55
15	8	0.95 / 2.21 / 0.95	4.11	32.88
16	3	2.58 / 3.13 / 0.81 ~ 0.98 / 2.58 / 3.13	6.61	19.83
17	9	0.60 / 0.20	0.80	7.20
18	12	2.05	2.05	24.60
19	3	4.70	4.70	14.10
20	14	1.30 / 0.20	1.50	21.00
21	4	0.20 / 2.21 / 0.20	2.61	10.44
22	8	0.20 / 0.40 / 0.25 / 0.25	1.10	8.80
23	34	0.035 / 0.035 / 0.09	0.21	7.14
24	10	0.23 / 0.15 / 0.10 / 0.15	1.06	10.60
		TOTAL LENGTH		891.29

891.29 x 1.21 = 1078.46 Kg.

STR. 1600_200

Pos.	No.	FORM	UNIT LENG.	LENG.
1	12	0.50 / 7.50 / 0.60	8.60	103.20
1a	—		—	—
2	11	0.20 / 4.87	5.07	55.77
3	11	0.35 / 4.30 / 0.20	4.85	53.35
4	2x8	0.60 / 4.01	4.61	73.76
5	2x7	6.40	6.40	89.60
5a	—		—	—
6	2x4	0.20 / 1.10 / 4.75	6.05	48.40
7	2x4	0.20 / 4.75	4.95	39.60
8	8	2.17 / 2.62 / 0.75 ~ 1.51 / 2.17 / 2.62	5.92	47.36
9	8	1.73 / 2.17 / 1.51 ~ 2.21 / 1.73 / 2.17	5.76	46.08
9a	—		—	—
9b	—		—	—
10	19	1.73 / 2.21 / 1.73	5.67	107.73
10a	—		—	—
10b	—		—	—
11	9	0.90 / 1.73 / 2.21 / 0.90 / 1.73	4.84	43.56
12	11	0.90 / 2.21 / 0.90	4.01	44.11
13	6	0.90 / 1.45 / 2.21 / 0.90 / 1.45	4.56	27.36
14	5	1.45 / 2.21 / 1.45	5.11	25.55
15	8	0.95 / 2.21 / 0.95	4.11	32.88
16	3	2.68 / 3.23 / 0.81 ~ 0.98 / 2.68 / 3.23	6.81	20.43
17	9	0.60 / 0.20	0.80	7.20
18	12	2.05	2.05	24.60
19	3	4.70	4.70	14.10
20	14	1.30 / 0.20	1.50	21.00
21	4	0.20 / 2.21 / 0.20	2.61	10.44
22	8	0.20 / 0.40 / 0.25 / 0.25	1.10	8.80
23	34	0.035 / 0.035 / 0.09	0.21	7.14
24	10	0.33 / 0.22 / 0.10 / 0.22	1.30	13.00
		TOTAL LENGTH		965.02

965.02 x 1.21 = 1167.67 Kg.

ALL BARS ARE Φ 14 (1.21 Kg/m)

REFERENCE DWGS: For plan & section see dwg. No. 11/1/1/01

For reinforcement see dwgs. No. 11/1/3/01 TO 11/1/3/03

For bars with variable unit length see note under the same title at dwg. No. 20/2/1/01

Scale:	IRRIGATION & DRAINAGE STANDARDS	
Date:	DWG. No. 11/1/3/19	RECTANGULAR INCLINED DROP LIST OF REINFORCEMENT
Approved:	Sheet No. 23 of 32 Rev. No.	STR. 1400_350 TO 1600_200

ISLAMIC REPUBLIC OF IRAN
MINISTRY OF PLAN & BUD
TECHNICAL RESEARCH AND STANDARD BUREAU

omoorepeyman.ir

STR. 1600_250

Pos.	No.	FORM	UNIT LENG.	LENG.
1	12	0.50 / 7.70 / 0.60	8.80	105.60
1a	—		—	—
2	11	0.20 / 6.10	6.30	69.30
3	11	0.35 / 4.50 / 0.20	5.05	55.55
4	2x9	0.60 / 4.04	4.64	83.52
5	2x8	6.70	6.70	107.20
5a	—		—	—
6	2x4	0.20 / 1.30 / 5.87	7.37	58.96
7	2x4	0.20 / 4.95	5.15	41.20
8	8	2.25 ~ 2.71 / 0.75 ~ 1.51 / 2.25 ~ 2.71	6.09	48.72
9	8	1.78 ~ 2.25 / 1.51 ~ 2.27 / 1.78 ~ 2.25	5.92	47.36
9a	—		—	—
9b	—		—	—
10	20	1.78 / 2.27 / 1.78	5.83	116.60
10a	—		—	—
10b	—		—	—
11	10	0.93 ~ 1.78 / 2.21 ~ 2.27 / 0.93 ~ 1.78	4.95	49.50
12	16	0.93 / 2.21 / 0.93	4.07	65.12
13	6	0.93 ~ 1.48 / 2.21 / 0.93 ~ 1.48	4.62	27.72
14	6	1.48 / 2.21 / 1.48	5.17	31.02
15	8	0.98 / 2.21 / 0.98	4.17	33.36
16	3	2.77 ~ 3.33 / 0.81 ~ 0.97 / 2.77 ~ 3.33	6.99	20.97
17	9	0.60 / 0.20	0.80	7.20
18	12	2.05	2.05	24.60
19	3	4.70	4.70	14.10
20	14	1.30 / 0.20	1.50	21.00
21	4	0.20 / 2.27 / 0.20	2.67	10.68
22	8	0.20 / 0.40 / 0.25 / 0.25	1.10	8.80
23	34	0.035 / 0.035 / 0.09	0.21	7.14
24	10	0.33 / 0.22 / 0.10 / 0.22	1.30	13.00

TOTAL LENGTH 1068.22

1068.22 x 1.21 = 1292.55 Kg

STR. 1600_300

Pos.	No.	FORM	UNIT LENG.	LENG.
1	12	0.50 / 7.90 / 0.60	9.00	108.00
1a	—		—	—
2	11	0.20 / 7.33	7.53	82.83
3	11	0.35 / 4.70 / 0.20	5.25	57.75
4	2x10	0.60 / 4.07	4.67	93.40
5	2x8	7.00	7.00	112.00
5a	—		—	—
6	2x4	0.20 / 1.50 / 6.98	8.68	69.44
7	2x4	0.20 / 5.15	5.35	42.80
8	8	2.32 ~ 2.81 / 0.75 ~ 1.51 / 2.32 ~ 2.81	6.26	50.08
9	8	1.83 ~ 2.32 / 1.51 ~ 2.27 / 1.83 ~ 2.32	6.04	48.32
9a	—		—	—
9b	—		—	—
10	21	1.83 / 2.27 / 1.83	5.93	124.53
10a	—		—	—
10b	—		—	—
11	11	0.93 ~ 1.83 / 2.21 ~ 2.27 / 0.93 ~ 1.83	5.00	55.00
12	20	0.93 / 2.21 / 0.93	4.07	81.40
13	6	0.93 ~ 1.48 / 2.21 / 0.93 ~ 1.48	4.62	27.72
14	7	1.48 / 2.21 / 1.48	5.17	36.19
15	8	0.98 / 2.21 / 0.98	4.17	33.36
16	3	2.87 ~ 3.43 / 0.81 ~ 0.97 / 2.87 ~ 3.43	7.19	21.57
17	9	0.60 / 0.20	0.80	7.20
18	12	2.05	2.05	24.60
19	3	4.70	4.70	14.10
20	14	1.30 / 0.20	1.50	21.00
21	4	0.20 / 2.27 / 0.20	2.67	10.68
22	8	0.20 / 0.40 / 0.25 / 0.25	1.10	8.80
23	34	0.035 / 0.035 / 0.09	0.21	7.14
24	10	0.33 / 0.22 / 0.10 / 0.22	1.30	13.00

TOTAL LENGTH 1150.91

1150.91 x 1.21 = 1392.60 Kg

STR. 1600_350

Pos.	No.	FORM	UNIT LENG.	LENG.
1	12	0.50 / 8.05 / 0.60	9.15	109.80
1a	—		—	—
2	11	0.20 / 8.50	8.70	95.70
3	11	0.35 / 4.90 / 0.20	5.45	59.95
4	2x10	0.60 / 4.10	4.70	94.00
5	2x9	7.25	7.25	130.50
5a	—		—	—
6	2x4	0.20 / 1.70 / 8.05	9.95	79.60
7	2x4	0.20 / 5.35	5.55	44.40
8	8	2.39 ~ 2.90 / 0.75 ~ 1.51 / 2.39 ~ 2.90	6.42	51.36
9	10	1.88 ~ 2.39 / 1.51 ~ 2.27 / 1.88 ~ 2.39	6.16	61.60
9a	—		—	—
9b	—		—	—
10	26	1.88 / 2.27 / 1.88	6.03	156.78
10a	—		—	—
10b	—		—	—
11	13	0.93 ~ 1.88 / 2.21 ~ 2.27 / 0.93 ~ 1.88	5.05	65.65
12	25	0.93 / 2.21 / 0.93	4.07	101.75
13	6	0.93 ~ 1.48 / 2.21 / 0.93 ~ 1.48	4.62	27.72
14	8	1.48 / 2.21 / 1.48	5.17	41.36
15	8	0.98 / 2.21 / 0.98	4.17	33.36
16	3	2.96 ~ 3.52 / 0.81 ~ 0.96 / 2.96 ~ 3.52	7.37	22.11
17	9	0.60 / 0.20	0.80	7.20
18	12	2.05	2.05	24.60
19	3	4.70	4.70	14.10
20	14	1.30 / 0.20	1.50	21.00
21	4	0.20 / 2.27 / 0.20	2.67	10.68
22	8	0.20 / 0.40 / 0.25 / 0.25	1.10	8.80
23	34	0.035 / 0.035 / 0.09	0.21	7.14
24	10	0.38 / 0.28 / 0.10 / 0.28	1.52	15.20

TOTAL LENGTH 1284.36

1284.36 x 1.21 = 1554.08 Kg

STR. 1600_400

Pos.	No.	FORM	UNIT LENG.	LENG.
1	12	0.50 / 8.20 / 0.60	9.30	111.60
1a	—		—	—
2	11	0.20 / 9.67	9.87	108.57
3	11	0.35 / 5.05 / 0.20	5.60	61.60
4	2x10	0.60 / 4.10	4.70	94.00
5	2x9	7.50	7.50	135.00
5a	—		—	—
6	2x4	0.20 / 1.85 / 9.11	11.16	89.28
7	2x4	0.20 / 5.50	5.70	45.60
8	8	2.42 ~ 2.90 / 0.75 ~ 1.51 / 2.42 ~ 2.90	6.45	51.60
9	10	1.93 ~ 2.42 / 1.51 ~ 2.27 / 1.93 ~ 2.42	6.24	62.40
9a	—		—	—
9b	—		—	—
10	27	1.93 / 2.27 / 1.93	6.13	165.51
10a	—		—	—
10b	—		—	—
11	14	0.93 ~ 1.93 / 2.21 ~ 2.27 / 0.93 ~ 1.93	5.10	71.40
12	29	0.93 / 2.21 / 0.93	4.07	118.03
13	6	0.93 ~ 1.48 / 2.21 / 0.93 ~ 1.48	4.62	27.72
14	8	1.48 / 2.21 / 1.48	5.17	41.36
15	8	0.98 / 2.21 / 0.98	4.17	33.36
16	3	2.96 ~ 3.52 / 0.81 ~ 0.96 / 2.96 ~ 3.52	7.37	22.11
17	9	0.60 / 0.20	0.80	7.20
18	12	2.05	2.05	24.60
19	3	4.70	4.70	14.10
20	14	1.30 / 0.20	1.50	21.00
21	4	0.20 / 2.27 / 0.20	2.67	10.68
22	8	0.20 / 0.40 / 0.25 / 0.25	1.10	8.80
23	34	0.035 / 0.035 / 0.09	0.21	7.14
24	10	0.38 / 0.28 / 0.10 / 0.28	1.52	15.20

TOTAL LENGTH 1347.26

1347.26 x 1.21 = 1630.18 Kg

STR. 1800_100

Pos.	No.	FORM	UNIT LENG.	LENG.
1	12	0.50 / 7.05 / 0.60	8.15	97.80
1a	—		—	—
2	11	0.20 / 2.35	2.55	28.05
3	11	0.35 / 4.05 / 0.20	4.60	50.60
4	2x7	0.60 / 3.96	4.56	63.84
5	2x6	5.65	5.65	67.80
5a	—		—	—
6	2x4	0.20 / 0.75 / 2.68	3.63	29.04
7	2x4	0.20 / 4.50	4.70	37.60
8	8	2.43 ~ 2.00 / 0.90 ~ 1.64 / 2.43 ~ 2.00	5.70	45.60
9	8	2.00 ~ 1.58 / 1.64 ~ 2.31 / 2.00 ~ 1.58	5.56	44.48
9a	—		—	—
9b	—		—	—
10	17	1.58 / 2.31 / 1.58	5.47	92.99
10a	—		—	—
10b	—		—	—
11	8	0.90 ~ 1.58 / 2.31 / 0.90 ~ 1.58	4.79	38.32
12	3	0.90 / 2.31 / 0.90	4.11	12.33
13	7	0.90 ~ 1.50 / 2.31 / 0.90 ~ 1.50	4.71	32.96
14	4	1.50 / 2.31 / 1.50	5.31	21.24
15	8	1.00 / 2.31 / 1.00	4.31	34.48
16	3	2.49 ~ 3.02 / 0.96 ~ 1.16 / 2.49 ~ 3.02	6.57	19.71
17	10	0.60 / 0.20	0.80	8.00
18	14	2.10	2.10	29.40
19	3	4.90	4.90	14.70
20	14	1.35 / 0.20	1.55	21.70
21	4	0.20 / 2.31 / 0.20	2.71	10.84
22	8	0.20 / 0.40 / 0.25 / 0.25	1.10	8.80
23	34	0.035 / 0.035 / 0.09	0.21	7.14
24	10	0.28 / 0.15 / 0.10 / 0.15	1.06	10.60

TOTAL LENGTH 828.03

828.03 x 1.21 = 1002.92 Kg

ALL BARS ARE Φ14 (1.21 Kg/m)

REFERENCE DWGS: For plan section see dwg. No. 11/1/1/01

For reinforcement see dwgs. No. 11/1/3/01 TO 11/1/3/03

For bars with variable unit length see note under the same title at dwg. No. 20/2/1/01

Scale:

Date:

Approved:

IRRIGATION & DRAINAGE STANDARDS

DWG. No. 11/1/3/20

Sheet No. 24 of 32 Rev. No.

RECTANGULAR INCLINED DROP
LIST OF REINFORCEMENT
STR. 1600_250 TO 1800_100

ISLAMIC REPUBLIC OF IRAN
MINISTRY OF PLAN & BUD
TECHNICAL RESEARCH AND STANDARD BUREAU

@omoorepeyman.ir

STR. 1800–150

Pos.	No.	FORM	UNIT LENG.	LENG.
1	12	0.50 / 7.40 / 0.60	8.50	102.00
1a	—		—	—
2	11	0.20 / 3.64	3.84	42.24
3	11	0.35 / 4.20 / 0.20	4.75	52.25
4	2x8	0.60 / 4.02	4.62	73.92
5	2x7	6.20	6.20	86.80
5a	—		—	—
6	2x4	0.20 / 0.90 / 3.74	4.84	38.72
7	2x4	0.20 / 4.65	4.85	38.80
8	8	2.15 / 2.62 / 0.90~1.64 / 2.15 / 2.62	6.04	48.32
9	8	1.68 / 2.15 / 1.64~2.31 / 1.68 / 2.15	5.81	46.48
9a	—		—	—
9b	—		—	—
10	18	1.68 / 2.31 / 1.68	5.67	102.06
10a	—		—	—
10b	—		—	—
11	9	0.90 / 1.68 / 2.31 / 0.90 / 1.68	4.89	44.01
12	7	0.90 / 2.31 / 0.90	4.11	28.77
13	7	0.90 / 1.50 / 2.31 / 0.90 / 1.50	4.71	32.97
14	4	1.50 / 2.31 / 1.50	5.31	21.24
15	8	1.00 / 2.31 / 1.00	4.31	34.48
16	3	2.68 / 3.21 / 0.96~1.15 / 2.68 / 3.21	6.95	20.85
17	10	0.60 / 0.20	0.80	8.00
18	14	2.10	2.10	29.90
19	3	4.90	4.90	14.70
20	14	1.35 / 0.20	1.55	21.70
21	4	0.20 / 2.31 / 0.20	2.71	10.84
22	8	0.20 / 0.40 / 0.25 / 0.25	1.10	8.80
23	34	0.035 / 0.035 / 0.09	0.21	7.14
24	10	0.33 / 0.22 / 0.10 / 0.22	1.30	13.00
		TOTAL LENGTH		927.99

927.99 x 1.21 = 1122.87Kg

STR. 1800–200

Pos.	No.	FORM	UNIT LENG.	LENG.
1	13	0.50 / 7.85 / 0.60	8.75	113.75
1a			—	—
2	11	0.20 / 4.87	5.07	55.77
3	11	0.35 / 4.40 / 0.20	4.95	54.45
4	2x9	0.60 / 4.05	4.65	83.70
5	2x8	4.65	6.65	106.40
5a	—		—	—
6	2x4	0.20 / 1.10 / 4.75	6.05	48.40
7	2x4	0.20 / 4.85	5.05	40.40
8	8	2.25 / 2.71 / 0.90~1.64 / 2.25 / 2.71	6.23	49.84
9	8	1.78 / 2.25 / 1.64~2.37 / 1.78 / 2.25	6.04	48.32
9a	—		—	—
9b	—		—	—
10	20	1.78 / 2.37 / 1.78	5.93	118.60
10a	—		—	—
10b	—		—	—
11	10	0.93 / 1.78 / 2.31~2.37 / 0.93 / 1.78	5.05	50.50
12	11	0.93 / 2.31 / 0.93	4.17	45.87
13	7	0.93 / 1.53 / 2.31 / 0.93 / 1.53	4.77	33.39
14	5	1.53 / 2.31 / 1.53	5.37	26.85
15	8	1.03 / 2.31 / 1.03	4.73	34.96
16	3	2.77 / 3.31 / 0.96~1.15 / 2.77 / 3.31	7.14	21.42
17	10	0.60 / 0.20	0.80	8.00
18	14	2.10	2.10	29.90
19	3	4.90	4.90	14.70
20	14	1.35 / 0.20	1.55	21.70
21	4	0.20 / 2.37 / 0.20	2.77	11.08
22	8	0.20 / 0.40 / 0.25 / 0.25	1.10	8.80
23	34	0.035 / 0.035 / 0.09	0.21	7.14
24	10	0.33 / 0.22 / 0.10 / 0.22	1.30	13.00
		TOTAL LENGTH		1046.94

1046.94 x 1.21 = 1266.80Kg

STR. 1800–250

Pos.	No.	FORM	UNIT LENG.	LENG.
1	13	0.50 / 7.85 / 0.60	8.95	116.35
1a	—		—	—
2	11	0.20 / 6.10	6.30	69.30
3	11	0.35 / 4.60 / 0.20	5.15	56.65
4	2x10	0.60 / 4.11	4.71	94.20
5	2x9	7.05	7.05	126.90
5a	—		—	—
6	2x4	0.20 / 1.30 / 5.75	7.25	58.00
7	2x4	0.20 / 5.05	5.25	42.00
8	8	2.39 / 2.90 / 0.90~1.64 / 2.39 / 2.90	6.56	52.48
9	10	1.88 / 2.39 / 1.64~2.37 / 1.88 / 2.39	6.28	62.80
9a	—		—	—
9b	—		—	—
10	25	1.88 / 2.37 / 1.88	6.13	153.25
10a	—		—	—
10b	—		—	—
11	13	0.93 / 1.88 / 2.31~2.37 / 0.93 / 1.88	5.15	66.95
12	15	0.93 / 2.31 / 0.93	4.17	62.55
13	7	0.93 / 1.53 / 2.31 / 0.93 / 1.53	4.77	33.39
14	6	1.53 / 2.31 / 1.53	5.37	32.22
15	8	1.03 / 2.31 / 1.03	4.37	34.96
16	3	2.96 / 3.51 / 0.96~1.14 / 2.96 / 3.51	7.52	22.56
17	10	0.60 / 0.20	0.80	8.00
18	14	2.10	2.10	29.90
19	3	4.90	4.90	14.70
20	14	1.35 / 0.20	1.55	21.70
21	4	0.20 / 2.37 / 0.20	2.77	11.08
22	8	0.20 / 0.40 / 0.25 / 0.25	1.10	8.80
23	34	0.035 / 0.035 / 0.09	0.21	7.14
24	10	0.33 / 0.22 / 0.10 / 0.22	1.30	13.00
		TOTAL LENGTH		1198.88

1198.88 x 1.21 = 1450.64Kg

STR. 1800–300

Pos.	No.	FORM	UNIT LENG.	LENG.
1	13	0.50 / 8.05 / 0.60	9.15	118.95
1a	—		—	—
2	11	0.20 / 7.33	7.53	82.83
3	11	0.35 / 4.80 / 0.20	5.35	58.85
4	2x11	0.60 / 4.14	4.74	104.28
5	2x9	7.35	7.35	132.30
5a	—		—	—
6	2x4	0.20 / 1.50 / 6.87	8.57	68.56
7	2x4	0.20 / 5.25	5.45	43.60
8	8	2.46 / 3.00 / 0.90~1.64 / 2.46 / 3.00	6.73	53.84
9	10	1.93 / 2.46 / 1.64~2.37 / 1.93 / 2.46	6.40	64.00
9a	—		—	—
9b	—		—	—
10	26	1.93 / 2.37 / 1.93	6.23	161.98
10a	—		—	—
10b	—		—	—
11	14	0.93 / 1.93 / 2.31~2.37 / 0.93 / 1.93	5.20	72.80
12	20	0.93 / 2.31 / 0.93	4.17	83.40
13	7	0.93 / 1.53 / 2.31 / 0.93 / 1.53	4.77	33.39
14	7	1.53 / 2.31 / 1.53	5.37	37.59
15	8	1.03 / 2.31 / 1.03	4.37	34.96
16	3	3.06 / 3.61 / 0.96~1.13 / 3.06 / 3.61	7.72	23.16
17	10	0.60 / 0.20	0.80	8.00
18	14	2.10	2.10	29.90
19	3	4.90	4.90	14.70
20	14	1.35 / 0.20	1.55	21.70
21	4	0.21 / 2.37 / 0.20	2.77	11.08
22	8	0.20 / 0.40 / 0.25 / 0.25	1.10	8.80
23	34	0.035 / 0.035 / 0.09	0.21	7.14
24	10	0.28 / 0.38 / 0.10 / 0.28	1.52	15.20
		TOTAL LENGTH		1291.01

1291.01 x 1.21 = 1562.12 Kg

STR. 1800–350

Pos.	No.	FORM	UNIT LENG.	LENG.
1	9	0.50 / 8.20 / 0.60	9.30	83.70
1a	10	0.20 / 8.40 / 0.60	9.20	92.00
2	11	0.20 / 8.50	8.70	95.70
3	11	0.35 / 5.00 / 0.20	5.55	61.05
4	2x11	0.60 / 4.18	4.78	105.16
5	2x9	7.60	7.60	136.80
5a	—		—	—
6	2x4	0.20 / 1.70 / 7.93	9.83	78.64
7	2x4	0.20 / 5.45	5.65	45.20
8	8	2.55 / 3.09 / 0.90~1.64 / 2.55 / 3.09	6.91	55.28
9	10	2.00 / 2.55 / 1.64~2.37 / 2.00 / 2.55	6.56	65.60
9a	—		—	—
9b	6	0.20 / 1.64~2.37 / 0.20	2.41	14.46
10	27	2.00 / 2.37 / 2.00	6.37	171.99
10a	—		—	—
10b	16	0.20 / 2.37 / 0.20	2.77	44.32
11	14	0.93 / 2.00 / 2.31~2.37 / 0.93 / 2.00	5.27	73.78
12	24	0.93 / 2.31 / 0.93	4.17	100.08
13	7	0.93 / 1.53 / 2.31 / 0.93 / 1.53	4.77	33.39
14	8	1.53 / 2.31 / 1.53	5.37	42.96
15	8	1.03 / 2.31 / 1.03	4.37	34.96
16	3	3.15 / 3.70 / 0.96~1.13 / 3.15 / 3.70	7.90	23.70
17	10	0.60 / 0.20	0.80	8.00
18	14	2.10	2.10	29.90
19	3	4.90	4.90	14.70
20	14	1.35 / 0.20	1.55	21.70
21	4	0.20 / 2.37 / 0.20	2.77	11.08
22	8	0.20 / 0.40 / 0.25 / 0.25	1.10	8.80
23	34	0.035 / 0.035 / 0.09	0.21	7.14
24	10	0.28 / 0.40 / 0.10 / 0.28	1.56	15.60
		TOTAL LENGTH		1475.69

1475.69 x 1.21 = 1785.58Kg

ALL BARS ARE Φ14 (1.21 Kg/m)

REFERENCE DWGS: For plan & section see dwg No. 11/1/1/01

For reinforcement see dwgs No. 11/1/3/01 TO 11/1/3/03

For bars with various unit length see note under the same title at dwg No. 29/2/1/01

Scale:	IRRIGATION & DRAINAGE STANDARDS	
Date:	DWG. No. 11/1/3/21	RECTANGULAR INCLINED DROP LIST OF REINFORCEMENT
Approved:	Sheet No. 25 of 32 Rev. No.	STR. 1800–150 TO 1800–350

ISLAMIC REPUBLIC OF IRAN
MINISTRY OF PLAN & BUDJET
TECHNICAL RESEARCH AND STANDARD BUREAU

omoorepeyman.ir

STR. 1800–400

Pos.	No	FORM	UNIT LENG.	LENG.
1	9	0.50 / 8.40 / 0.60	9.50	85.50
1a	10	0.20 / 8.60 / 0.60	9.40	94.00
2	11	0.20 / 9.67	9.87	108.57
3	11	0.35 / 5.20 / 0.20	5.75	63.25
4	2x11	0.60 / 4.18	4.78	105.16
5	2x9	7.90	7.90	142.20
5a	—		—	—
6	2x4	0.20 / 1.90 / 9.00	11.20	89.60
7	2x4	0.20 / 5.65	5.85	46.80
8	8	2.57 3.09 / 0.90 ~ 1.64 / 2.57 3.09	6.93	55.44
9	10	2.05 2.57 / 1.64 ~ 2.37 / 2.05 2.57	6.63	66.30
9a	—		—	—
9b	6	0.20 / 1.64 ~ 2.37 / 0.20	2.41	14.46
10	28	2.05 / 2.37 / 2.05	6.47	181.16
10a	—		—	—
10b	16	0.20 / 2.37 / 0.20	2.77	44.32
11	15	0.93 2.05 / 2.31 ~ 2.37 / 0.93 2.05	5.32	79.80
12	28	0.93 / 2.31 / 0.93	4.17	116.76
13	7	0.93 1.53 / 2.31 / 0.93 1.53	4.77	33.39
14	8	1.53 / 2.31 / 1.53	5.37	42.96
15	8	1.03 / 2.31 / 1.03	4.37	34.96
16	3	3.15 3.70 / 0.96 ~ 1.13 / 3.15 3.70	7.50	23.70
17	10	0.60 / 0.20	0.80	8.00
18	14	2.10	2.10	29.90
19	3	4.90	4.90	14.70
20	14	1.35 / 0.20	1.55	21.70
21	4	0.20 / 2.37 / 0.20	2.77	11.08
22	8	0.20 / 0.40 / 0.25 / 0.25	1.10	8.80
23	34	0.035 0.035 / 0.09	0.21	7.14
24	10	0.40 / 0.28 / 0.10 / 0.28	1.56	15.60
		TOTAL LENGTH	1545.25	

1545.25 x 1.21 = 1869.75 Kg

STR. 2000–100

Pos.	No.	FORM	UNIT LENG.	LENG.
1	13	0.50 / 7.25 / 0.60	8.35	108.55
1a	—		—	—
2	11	0.20 / 2.35	2.55	28.05
3	11	0.35 / 4.10 / 0.20	4.65	51.15
4	2x7	0.60 / 4.04	4.64	64.96
5	2x7	5.85	5.85	81.90
5a	—		—	—
6	2x4	0.20 / 0.70 / 2.68	3.58	28.64
7	2x4	0.20 / 4.55	4.75	38.00
8	8	2.03 2.43 / 0.90 ~ 1.71 / 2.03 2.43	5.77	46.16
9	8	1.63 2.03 / 1.71 ~ 2.41 / 1.63 2.03	5.72	45.76
9a	—		—	—
9b	—		—	—
10	17	1.63 / 2.41 / 1.63	5.67	96.39
10a	—		—	—
10b	—		—	—
11	9	0.90 1.63 / 2.41 / 0.90 1.63	4.94	44.46
12	2	0.90 / 2.41 / 0.90	4.21	8.42
13	7	0.90 1.55 / 2.41 / 0.90 1.55	4.86	34.02
14	4	1.55 / 2.41 / 1.55	5.51	22.04
15	8	1.05 / 2.41 / 1.05	4.51	36.08
16	3	2.49 3.02 / 0.96 ~ 1.16 / 2.49 3.02	6.57	19.71
17	10	0.60 / 0.20	0.80	8.00
18	14	2.15	2.15	30.10
19	3	5.10	5.10	15.30
20	14	1.40 / 0.20	1.60	22.40
21	4	0.20 / 2.41 / 0.20	2.81	11.24
22	8	0.20 / 0.40 / 0.25 / 0.25	1.10	8.80
23	34	0.035 0.035 / 0.09	0.21	7.14
24	10	0.28 / 0.15 / 0.10 / 0.15	1.06	10.60
		TOTAL LENGTH	867.87	

867.87 x 1.21 = 1050.12 Kg

STR. 2000–150

Pos.	No.	FORM	UNIT LENG.	LENG.
1	13	0.50 / 7.60 / 0.60	8.70	113.10
1a	—		—	—
2	11	0.20 / 3.64	3.84	42.24
3	11	0.35 / 4.30 / 0.20	4.85	53.35
4	2x8	0.60 / 4.10	4.70	75.20
5	2x7	6.40	6.40	89.60
5a	—		—	—
6	2x4	0.20 / 0.90 / 3.74	4.84	38.72
7	2x4	0.20 / 4.75	4.95	39.60
8	8	2.17 2.62 / 0.90 ~ 1.71 / 2.17 2.62	6.10	48.80
9	8	1.73 2.17 / 1.71 ~ 2.41 / 1.73 2.17	5.96	47.68
9a	—		—	—
9b	—		—	—
10	19	1.73 / 2.41 / 1.73	5.87	111.53
10a	—		—	—
10b	—		—	—
11	10	0.90 1.73 / 2.41 / 0.90 1.73	5.04	50.40
12	7	0.90 / 2.41 / 0.90	4.21	29.47
13	7	0.90 1.55 / 2.41 / 0.90 1.55	4.86	34.02
14	4	1.55 / 2.41 / 1.55	5.51	22.04
15	8	1.05 / 2.41 / 1.05	4.51	36.08
16	3	2.68 3.21 / 0.96 ~ 1.15 / 2.68 3.21	6.95	20.85
17	10	0.60 / 0.20	0.80	8.00
18	14	2.15	2.15	30.10
19	3	5.10	5.10	15.30
20	14	1.40 / 0.20	1.60	22.40
21	4	0.20 / 2.41 / 0.20	2.81	11.24
22	8	0.20 / 0.40 / 0.25 / 0.25	1.10	8.80
23	34	0.035 0.035 / 0.09	0.21	7.14
24	10	0.33 / 0.22 / 0.10 / 0.22	1.30	13.00
		TOTAL LENGTH	968.66	

968.66 x 1.21 = 1172.08 Kg

STR. 2000–200

Pos.	No.	FORM	UNIT LENG.	LENG.
1	13	0.50 / 7.90 / 0.60	9.00	117.00
1a	—		—	—
2	12	0.20 / 4.87	5.07	60.84
3	11	0.35 / 4.50 / 0.20	5.05	55.55
4	2x9	0.60 / 4.15	4.75	85.50
5	2x8	6.90	6.90	110.40
5a	—		—	—
6	2x4	0.20 / 1.10 / 4.75	6.05	48.40
7	2x4	4.95	5.15	41.20
8	8	2.32 2.81 / 0.90 ~ 1.71 / 2.32 2.81	6.44	51.52
9	8	1.83 2.32 / 1.71 ~ 2.47 / 1.83 2.32	6.24	49.92
9a	—		—	—
9b	—		—	—
10	20	1.83 / 2.47 / 1.83	6.13	122.60
10a	—		—	—
10b	—		—	—
11	11	0.93 1.83 / 2.41 ~ 2.47 / 0.93 1.83	5.20	57.20
12	11	0.93 / 2.41 / 0.93	4.27	46.97
13	7	0.93 1.58 / 2.41 / 0.93 1.58	4.92	34.44
14	5	1.58 / 2.41 / 1.58	5.57	27.85
15	8	1.08 / 2.41 / 1.08	4.57	36.56
16	3	2.87 3.41 / 0.96 ~ 1.14 / 2.87 3.41	7.33	21.99
17	10	0.60 / 0.20	0.80	8.00
18	14	2.15	2.15	30.10
19	3	5.10	5.10	15.30
20	14	1.40 / 0.20	1.60	22.40
21	4	0.20 / 2.47 / 0.20	2.87	11.48
22	8	0.20 / 0.40 / 0.25 / 0.25	1.10	8.80
23	34	0.035 0.035 / 0.09	0.21	7.14
24	10	0.33 / 0.22 / 0.10 / 0.22	1.30	13.00
		TOTAL LENGTH	1084.16	

1084.16 x 1.21 = 1311.83 Kg

STR. 2000–250

Pos.	No.	FORM	UNIT LENG.	LENG.
1	13	0.50 / 8.10 / 0.60	9.20	119.60
1a	—		—	—
2	12	0.20 / 6.10	6.30	75.60
3	11	0.35 / 4.70 / 0.20	5.25	57.75
4	2x10	0.60 / 4.18	4.78	95.60
5	2x9	7.20	7.20	129.60
5a	—		—	—
6	2x4	0.20 / 1.30 / 5.87	7.37	58.96
7	2x4	0.20 / 5.15	5.35	42.80
8	8	2.39 2.90 / 0.90 ~ 1.71 / 2.39 2.90	6.60	52.80
9	10	1.88 2.39 / 1.71 ~ 2.47 / 1.88 2.39	6.36	63.60
9a	—		—	—
9b	—		—	—
10	26	1.88 / 2.47 / 1.88	6.23	161.98
10a	—		—	—
10b	—		—	—
11	13	0.93 1.88 / 2.41 ~ 2.47 / 0.93 1.88	5.25	68.25
12	15	0.93 / 2.41 / 0.93	4.27	64.05
13	7	0.93 1.58 / 2.41 / 0.93 1.58	4.92	34.44
14	6	1.58 / 2.41 / 1.58	5.57	33.42
15	8	1.08 / 2.41 / 1.08	4.57	36.56
16	3	2.96 3.51 / 0.96 ~ 1.14 / 2.96 3.51	7.52	22.56
17	10	0.60 / 0.20	0.80	8.00
18	14	2.15	2.15	30.10
19	3	5.10	5.10	15.30
20	14	1.40 / 0.20	1.60	22.40
21	4	0.20 / 2.47 / 0.20	2.87	11.48
22	8	0.20 / 0.40 / 0.25 / 0.25	1.10	8.80
23	34	0.035 0.035 / 0.09	0.21	7.14
24	10	0.38 / 0.28 / 0.10 / 0.28	1.52	15.20
		TOTAL LENGTH	1235.99	

1235.99 x 1.21 = 1495.55 Kg

ALL BARS ARE Φ14 (1.21 Kg/m)

REFERENCE DWGS: For plan & section see dwg. No. 11/1/1/01
For reinforcement see dwgs, No. 11/1/3/01 TO 11/1/3/03
For bars with variable unit length see note under the same title at dwg. No. 20/2/1/01

Scale:	IRRIGATION & DRAINAGE STANDARDS	
Date:	DWG. No. 11/1/3/22	RECTANGULAR INCLINED DROP LIST OF REINFORCEMENT
Approved:	Sheet No. 26 of 32 Rev. No.	STR. 1800–400 TO 2000–250

ISLAMIC REPUBLIC OF IRAN
MINISTRY OF PLAN & BUD.
TECHNICAL RESEARCH AND STANDARD BUREAU

STR. 2000_300

Pos.	No.	FORM	UNIT LENG.	LENG.
1	9	0.50 8.30 0.60	9.40	84.60
1a	10	0.20 8.50 0.60	9.30	93.00
2	12	0.20 7.33	7.53	90.36
3	11	0.35 4.90 0.20	5.45	59.95
4	2x11	0.60 4.25	4.85	106.70
5	2x9	7.60	7.60	136.80
5a	—		—	—
6	2x4	0.20 1.50 6.87	8.57	68.56
7	2x4	0.20 5.35	5.55	44.40
8	8	2.55 3.09 0.90 ~ 1.71 2.55 3.09	6.95	55.60
9	10	2.00 2.55 1.71 ~ 2.47 2.00 2.55	6.64	66.40
9a	—		—	—
9b	7	0.20 1.71 ~ 2.47 0.20	2.49	17.43
10	27	2.00 2.47 2.00	6.47	174.69
10a	—		—	—
10b	17	0.20 2.47 0.20	2.87	48.79
11	14	0.93 2.00 2.41 ~ 2.47 0.93 2.00	5.37	75.18
12	19	0.93 2.41 0.93	4.27	81.13
13	7	0.93 1.58 2.41 0.93 1.58	4.92	34.44
14	6	1.58 2.41 1.58	5.57	33.42
15	8	1.08 2.41 1.08	4.57	36.56
16	3	3.15 3.70 0.96 ~ 1.13 3.15 3.70	7.90	23.70
17	10	0.60 0.20	0.80	8.00
18	14	2.15	2.15	30.10
19	3	5.10	5.10	15.30
20	14	1.40 0.20	1.60	22.40
21	4	0.20 2.47 0.20	2.87	11.48
22	8	0.20 0.40 0.25 0.25	1.10	8.80
23	34	0.035 0.035 0.09	0.21	7.14
24	10	0.40 0.28 0.10 0.28	1.56	15.60
		TOTAL LENGTH		1450.53

1450.53 x 1.21 = 1755.14Kg.

STR. 2000_350

Pos.	No.	FORM	UNIT LENG.	LENG.
1	9	0.50 8.45 0.60	9.55	85.95
1a	10	0.20 8.65 0.60	9.45	94.50
2	12	0.20 8.50	8.70	104.40
3	11	0.35 5.10 0.20	5.65	62.15
4	2x11	0.60 4.25	4.85	106.70
5	2x9	7.85	7.85	141.30
5a			—	—
6	2x4	0.20 1.70 7.93	9.83	78.64
7	2x4	0.20 5.55	5.75	46.00
8	8	2.57 3.09 0.90 ~ 1.71 2.57 3.09	6.97	55.76
9	10	2.05 2.57 1.71 ~ 2.47 2.05 2.57	6.71	67.10
9a			—	—
9b	7	0.20 1.71 ~ 2.47 0.20	2.49	17.43
10	28	2.05 2.47 2.05	6.57	183.96
10a	—		—	—
10b	17	0.20 2.47 0.20	2.87	48.79
11	15	0.93 2.05 2.41 ~ 2.47 0.93 2.05	5.42	81.30
12	23	0.93 2.41 0.93	4.27	98.21
13	7	0.93 1.58 2.41 0.93 1.58	4.92	34.44
14	8	1.58 2.41 1.58	5.57	44.56
15	8	1.08 2.41 1.08	4.57	36.56
16	3	3.15 3.70 0.96 ~ 1.13 3.15 3.70	7.90	23.70
17	10	0.60 0.20	0.80	8.00
18	14	2.15	2.15	30.10
19	3	5.10	5.10	15.30
20	14	1.40 0.20	1.60	22.40
21	4	0.20 2.47 0.20	2.87	11.48
22	8	0.20 0.40 0.25 0.25	1.10	8.80
23	34	0.035 0.035 0.09	0.21	7.14
24	10	0.40 0.28 0.10 0.28	1.56	15.60
		TOTAL LENGTH		1530.27

1530.27 x 1.21 = 1851.63Kg.

STR. 2000_400

Pos.	No.	FORM	UNIT LENG.	LENG.
1	9	0.50 8.65 0.60	9.75	87.75
1a	11	0.20 8.89 0.60	9.69	106.59
2	12	0.20 9.67	9.87	118.44
3	12	0.35 5.30 0.20	5.85	70.20
4	2x11	0.60 4.28	4.88	107.36
5	2x7	8.15	8.15	114.10
5a	2x7	8.15 1.80	9.95	139.30
6	2x4	0.20 1.90 9.00	11.10	88.80
7	2x4	0.20 5.75	5.95	47.60
8	8	2.65 3.19 0.90 ~ 1.71 2.65 3.19	7.15	57.20
9	10	2.12 2.65 1.71 ~ 2.51 2.12 2.65	6.88	68.80
9a	2x7	0.20 2.12 ~ 2.65 0.20	2.99	41.86
9b	7	0.20 1.71 ~ 2.51 0.20	2.51	17.57
10	29	2.12 2.51 2.12	6.75	195.75
10a	2x17	2.12 0.20	2.32	78.88
10b	17	0.20 2.51 0.20	2.91	49.47
11	16	0.94 2.12 2.43 ~ 2.51 0.94 2.12	5.53	88.48
12	28	0.94 2.43 0.94	4.31	120.68
13	7	0.94 1.59 2.43 0.94 1.59	4.96	34.72
14	8	1.59 2.43 1.59	5.61	44.88
15	8	1.09 2.43 1.09	4.61	36.88
16	3	3.25 3.80 0.96 ~ 1.12 3.25 3.80	8.09	24.27
17	10	0.60 0.20	0.80	8.00
18	14	2.15	2.15	30.10
19	3	5.10	5.10	15.30
20	14	1.40 0.20	1.60	22.40
21	4	0.20 2.51 0.20	2.91	11.64
22	8	0.20 0.40 0.25 0.25	1.10	8.80
23	34	0.035 0.035 0.09	0.21	7.14
24	10	0.42 0.28 0.10 0.28	1.60	16.00
		TOTAL LENGTH		1858.96

1858.96 x 1.21 = 2249.34Kg.

STR. 2250_100

Pos.	No.	FORM	UNIT LENG.	LENG.
1	13	0.50 7.55 0.60	8.65	112.45
1a				
2	12	0.20 2.35	2.55	30.60
3	12	0.35 4.20 0.20	4.75	57.00
4	2x7	0.80 4.15	4.75	66.50
5	2x7	6.05	6.05	84.70
5a	—		—	—
6	2x4	0.20 0.80 2.62	3.62	28.96
7	2x5	0.20 4.65	4.85	48.50
8	8	2.10 2.52 0.90 ~ 1.76 2.10 2.52	5.95	47.60
9	8	1.68 2.10 1.76 ~ 2.51 1.68 2.10	5.92	47.36
9a	—		—	—
9b	—		—	—
10	18	1.68 2.51 1.68	5.87	105.66
10a	—		—	—
10b	—		—	—
11	9	0.95 1.68 2.51 0.95 1.68	5.14	46.26
12	2	0.95 2.51 0.95	4.41	8.82
13	7	0.95 1.60 2.51 0.95 1.60	5.06	35.42
14	4	1.60 2.51 1.60	5.71	22.84
15	8	1.10 2.51 1.10	4.71	37.68
16	3	2.58 3.12 0.96 ~ 1.16 2.58 3.12	6.76	20.28
17	11	0.60 0.20	0.80	8.80
18	14	2.20	2.20	30.80
19	3	5.40	5.40	16.20
20	16	1.50 0.20	1.70	27.20
21	4	0.20 2.51 0.20	2.91	11.64
22	8	0.20 0.40 0.25 0.25	1.10	8.80
23	34	0.035 0.035 0.09	0.21	7.14
24	10	0.28 0.15 0.10 0.15	1.06	10.60
		TOTAL LENGTH		921.81

921.81 x 1.21 = 1115.39Kg.

STR. 2250_150

Pos.	No.	FORM	UNIT LENG.	LENG.
1	13	0.50 7.90 0.60	9.00	117.00
1a	—		—	—
2	12	0.20 3.64	3.84	46.08
3	12	0.35 4.40 0.20	4.95	59.40
4	2x9	0.50 4.20	4.70	84.60
5	2x8	6.60	6.60	105.60
5a	—		—	—
6	2x4	0.20 1.00 3.74	4.94	39.52
7	2x5	0.20 4.85	5.05	50.50
8	8	2.25 2.71 0.90 ~ 1.76 2.25 2.71	6.29	50.32
9	8	1.78 2.25 1.76 ~ 2.57 1.78 2.25	6.20	49.60
9a	—		—	—
9b	—		—	—
10	20	1.78 2.57 1.78	6.13	122.60
10a	—		—	—
10b			—	—
11	10	0.98 1.78 2.51 ~ 2.57 0.98 1.78	5.30	53.00
12	7	0.98 2.51 0.98	4.47	31.29
13	7	0.98 1.63 2.51 0.98 1.63	5.12	35.84
14	5	1.63 2.51 1.63	5.77	28.85
15	8	1.13 2.51 1.13	4.77	38.16
16	3	2.77 3.31 0.96 ~ 1.15 2.77 3.31	7.14	21.42
17	11	0.60 0.20	0.80	8.80
18	14	2.20	2.20	30.80
19	3	5.40	5.40	16.20
20	16	1.50 0.20	1.70	27.20
21	4	0.20 2.57 0.20	2.97	11.88
22	8	0.20 0.40 0.25 0.25	1.10	8.80
23	34	0.035 0.035 0.09	0.21	7.14
24	10	0.33 0.22 0.10 0.22	1.30	13.00
		TOTAL LENGTH		1057.60

1057.60 x 1.21 = 12[illegible].70 Kg.

ALL BARS ARE Φ14 (1.2[illegible] Kg/m)

REFERENCE DWGS: For plan section see dwg. No. 11/1/1/01
For reinforcement see dwgs. No. 11/1/3/01 TO 11/1/3/03
For bars with variable unit length see note under the same title at dwg. No. 20/2/1/01

Scale:	IRRIGATION & DRAINAGE STANDARDS	
Date:	DWG No. 11/1/3/23	RECTANGULAR INCLINED DROP LIST OF REINFORCEMENT
Approved:	Sheet No. 27 of 32 Rev. No.	STR. 2000_300 TO 2250_150

ISLAMIC REPUBLIC OF IRAN
MINISTRY OF PLAN & BU[illegible]
TECHNICAL RESEARCH AND STANDARD BUREAU

STR. 2250–200

Pos.	No.	FORM	UNIT LENG.	LENG.
1	13	0.50 8.15 0.60	9.25	120.25
1a	—		—	—
2	12	0.20 4.87	5.07	60.84
3	12	0.35 4.60 0.20	5.15	61.80
4	2x10	0.60 4.25	4.85	97.00
5	2x9	7.05	7.05	126.90
5a	—		—	—
6	2x4	0.20 1.20 4.75	6.15	49.20
7	2x5	0.20 5.05	5.25	52.50
8	8	2.39 2.90 0.90 ~ 1.76 2.39 2.90	6.62	52.96
9	10	1.88 2.39 1.76 ~ 2.57 1.88 2.39	6.44	64.40
9a	—		—	—
9b	—		—	—
10	26	1.88 2.57 1.88	6.33	164.58
10a	—		—	—
10b	—		—	—
11	13	0.98 1.88 2.51 ~ 2.57 0.98 1.88	5.40	70.20
12	11	0.98 2.51 0.98	4.47	49.17
13	7	0.98 1.63 2.51 0.98 1.63	5.12	35.84
14	6	1.63 2.51 1.63	5.77	34.62
15	8	1.13 2.51 1.13	4.77	38.16
16	3	2.96 3.51 0.96 ~ 1.14 2.96 3.51	7.52	22.56
17	11	0.60 0.20	0.80	8.80
18	14	2.20	2.20	30.80
19	3	5.40	5.40	16.20
20	16	1.50 0.20	1.70	27.20
21	4	0.20 2.57 0.20	2.97	11.88
22	8	0.20 0.40 0.25 0.25	1.10	8.80
23	34	0.035 0.035 0.09	0.21	7.14
24	10	0.33 0.22 0.10 0.22	1.30	13.00
		TOTAL LENGTH	1224.80	

1224.80 x 1.21 = 1482.01 Kg.

STR. 2250–250

Pos.	No.	FORM	UNIT LENG.	LENG.
1	9	0.50 8.40 0.60	9.50	85.50
1a	10	0.20 8.60 0.60	9.40	94.00
2	12	0.20 6.10	6.30	75.60
3	12	0.35 4.80 0.20	5.35	64.20
4	2x11	0.60 4.31	4.91	108.02
5	2x9	7.50	7.50	135.00
5a	—		—	—
6	2x4	0.20 1.40 5.75	7.35	58.80
7	2x5	0.20 5.25	5.45	54.50
8	8	2.55 3.09 0.90 ~ 1.76 2.55 3.09	6.97	55.76
9	10	2.00 2.55 1.76 ~ 2.57 2.00 2.55	6.72	67.20
9a	—		—	—
9b	7	0.20 1.76 ~ 2.57 0.20	2.57	17.99
10	27	2.00 2.57 2.00	6.57	177.39
10a	—		—	—
10b	16	0.20 2.57 0.20	2.97	47.52
11	14	0.98 2.00 2.51 ~ 2.57 0.98 2.00	5.52	77.28
12	15	0.98 2.51 0.98	4.47	67.05
13	7	0.98 1.63 2.51 0.98 1.63	5.12	35.84
14	6	1.63 2.51 1.63	5.77	34.62
15	8	1.13 2.51 1.13	4.77	38.16
16	3	3.15 3.70 0.96 ~ 1.13 3.15 3.70	7.90	23.70
17	11	0.60 0.20	0.80	8.80
18	14	2.20	2.20	30.80
19	3	5.40	5.40	16.20
20	16	1.50 0.20	1.70	27.20
21	4	0.20 2.57 0.20	2.97	11.88
22	8	0.20 0.40 0.25 0.25	1.10	8.80
23	34	0.035 0.035 0.09	0.21	7.14
24	10	0.40 0.28 0.10 0.28	1.56	15.60
		TOTAL LENGTH	1444.55	

1444.55 x 1.21 = 1747.91 Kg.

STR. 2250–300

Pos.	No.	FORM	UNIT LENG.	LENG.
1	9	0.50 8.60 0.60	9.70	87.30
1a	10	0.20 8.80 0.60	9.60	96.00
2	12	0.20 7.33	7.53	90.36
3	12	0.35 5.00 0.20	5.55	66.60
4	2x11	0.60 4.35	4.95	108.90
5	2x9	7.80	7.80	140.40
5a	—		—	—
6	2x4	0.20 1.60 6.87	8.67	69.36
7	2x5	0.20 5.45	5.65	56.50
8	8	2.62 3.19 0.90 ~ 1.76 2.62 3.19	7.14	57.12
9	10	2.05 2.62 1.76 ~ 2.57 2.05 2.62	6.84	68.40
9a	—		—	—
9b	7	0.20 1.76 ~ 2.57 0.20	2.57	17.99
10	28	2.05 2.57 2.05	6.67	186.76
10a	—		—	—
10b	16	0.20 2.57 0.20	2.97	47.52
11	14	0.98 2.05 2.51 ~ 2.57 0.98 2.05	5.57	77.98
12	19	0.98 2.51 0.98	4.47	84.93
13	7	0.98 1.63 2.51 0.98 1.63	5.12	35.84
14	7	1.63 2.51 1.63	5.77	40.39
15	8	1.13 2.51 1.13	4.77	38.16
16	3	3.25 3.80 0.96 ~ 1.12 3.25 3.80	8.09	24.27
17	11	0.60 0.20	0.80	8.80
18	14	2.20	2.20	30.80
19	3	5.40	5.40	16.20
20	16	1.50 0.20	1.70	27.20
21	4	0.20 2.57 0.20	2.97	11.88
22	8	0.20 0.40 0.25 0.25	1.10	8.80
23	34	0.035 0.035 0.09	0.21	7.14
24	10	0.40 0.28 0.10 0.28	1.56	15.60
		TOTAL LENGTH	1521.20	

1521.20 x 1.21 = 1840.65Kg

STR. 2250–350

Pos.	No.	FORM	UNIT LENG.	LENG.
1	10	0.50 8.80 0.60	9.90	99.00
1a	11	0.20 9.04 0.60	9.84	108.24
2	12	0.20 8.50	8.70	104.40
3	12	0.35 5.25 0.20	5.80	69.60
4	2x11	0.60 4.35	4.95	108.90
5	2x7	8.10	8.10	113.40
5a	2x7	8.10 1.80	9.90	138.60
6	2x4	0.20 1.85 7.93	9.98	79.84
7	2x5	0.20 5.70	5.90	59.00
8	8	2.65 3.19 0.90 ~ 1.76 2.65 3.19	7.17	57.36
9	10	2.12 2.65 1.76 ~ 2.61 2.12 2.65	6.96	69.60
9a	2x7	0.20 0.20 2.12 ~ 2.65 0.20	2.99	41.86
9b	7	0.20 1.76 ~ 2.61 0.20	2.59	18.13
10	29	2.12 2.61 2.12	6.85	198.65
10a	2x17	2.12 0.20	2.32	78.88
10b	17	0.20 2.61 0.20	3.01	51.17
11	15	0.99 2.12 2.53 ~ 2.61 0.99 2.12	5.68	85.20
12	23	0.99 2.53 0.99	4.51	103.73
13	7	0.99 1.64 2.53 0.99 1.64	5.16	36.12
14	8	1.64 2.53 1.64	5.81	46.48
15	8	1.14 2.53 1.14	4.81	38.48
16	3	3.25 3.80 0.96 ~ 1.12 3.25 3.80	8.09	24.27
17	11	0.60 0.20	0.80	8.80
18	14	2.20	2.20	30.80
19	3	5.40	5.40	16.20
20	16	1.50 0.20	1.70	27.20
21	4	0.20 2.61 0.20	3.01	12.04
22	8	0.20 0.40 0.25 0.25	1.10	8.80
23	34	0.035 0.035 0.09	0.21	7.14
24	10	0.42 0.28 0.10 0.28	1.60	16.00
		TOTAL LENGTH	1857.89	

1857.89 x 1.21 = 2248.05Kg

STR. 2250–400

Pos.	No.	FORM	UNIT LENG.	LENG.
1	10	0.50 9.00 0.60	10.10	101.00
1a	11	0.20 9.24 0.60	9.99	109.89
2	12	0.20 9.67	9.87	118.44
3	12	0.35 5.40 0.20	5.95	71.40
4	2x11	0.60 4.38	4.98	109.56
5	2x7	8.35	8.35	116.90
5a	2x7	8.35 1.80	10.15	142.10
6	2x4	0.20 2.05 9.00	11.25	90.00
7	2x5	0.20 5.85	6.05	60.50
8	8	2.73 3.28 0.90 ~ 1.76 2.73 3.28	7.34	58.72
9	10	2.17 2.73 1.76 ~ 2.61 2.17 2.73	7.09	70.90
9a	2x7	0.20 0.20 2.17 ~ 2.73 0.20	3.05	42.70
9b	7	0.20 1.76 ~ 2.61 0.20	2.59	18.13
10	30	2.17 2.61 2.17	6.95	208.50
10a	2x17	2.17 0.20	2.37	80.58
10b	17	0.20 2.61 0.20	3.01	51.17
11	16	0.99 2.17 2.53 ~ 2.61 0.99 2.17	5.73	91.68
12	28	0.99 2.53 0.99	4.51	126.28
13	7	0.99 1.64 2.53 0.99 1.64	5.16	36.12
14	9	1.64 2.53 1.64	5.81	52.29
15	8	1.14 2.53 1.14	4.81	38.48
16	3	3.25 3.80 0.96 ~ 1.12 3.25 3.80	8.09	24.27
17	11	0.60 0.20	0.80	8.80
18	14	2.20	2.20	30.80
19	3	5.40	5.40	16.20
20	16	1.50 0.20	1.70	27.20
21	4	0.20 2.61 0.20	3.01	12.04
22	8	0.20 0.40 0.25 0.25	1.10	8.80
23	34	0.035 0.035 0.09	0.21	7.14
24	10	0.42 0.28 0.10 0.28	1.60	16.00
		TOTAL LENGTH	1946.59	

1946.59 x 1.21 = 2355.37Kg

ALL BARS ARE Φ 14 (1.21 Kg/m)

REFERENCE DWGS: For plan & section see dwg. No. 11/1/1/01

For reinforcement see dwgs. No. 11/1/3/01 TO 11/1/3/03

For bars with variable unit length see note under the same title at dwg. No. 20/2/1/01

Scale:	IRRIGATION & DRAINAGE STANDARDS		
Date:	DWG.No. 11/1/3/24	RECTANGULAR INCLINED DROP LIST OF REINFORCEMENT	
Approved:	Sheet No. 28 of 32 Rev.No.	STR. 2250_200 TO 2250_400	

ISLAMIC REPUBLIC OF IRAN
MINISTRY OF PLAN & BUDGET
TECHNICAL RESEARCH AND STANDARD BUREAU

qomoorepeyman.ir

STR. 2500_100

Pos.	No.	FORM	UNIT LENG.	LENG.
1	14	0.50 7.80 0.60	8.90	124.60
1a	—		—	—
2	12	0.20 2.35	2.55	30.60
3	12	0.35 4.55 0.20	5.10	61.20
4	2x8	0.60 4.27	4.87	77.92
5	2x7	6.30	6.30	88.20
5a	—		—	—
6	2x4	0.20 0.75 2.68	3.63	29.04
7	2x5	0.20 5.00	5.20	52.00
8	9	2.17 2.62 1.05 ~ 1.90 2.17 2.62	6.27	56.43
9	9	1.73 2.17 1.90 ~ 2.61 1.73 2.17	6.16	55.44
9a	—		—	—
9b	—		—	
10	19	1.73 2.61 1.73	6.07	115.33
10a	—		—	—
10b	—		—	—
11	9	0.95 1.73 2.61 0.95 1.73	5.29	47.61
12	2	0.95 2.61 0.95	4.51	9.02
13	7	0.95 1.65 2.61 0.95 1.65	5.21	36.47
14	4	1.65 2.61 1.65	5.91	23.64
15	10	1.15 2.61 1.15	4.91	49.10
16	3	2.68 3.20 1.11 ~ 1.33 2.68 3.20	7.10	21.30
17	11	0.60 0.20	0.80	8.80
18	14	2.25	2.25	31.50
19	3	5.60	5.60	16.80
20	16	1.55 0.20	1.75	28.00
21	4	0.20 2.61 0.20	3.01	12.04
22	10	0.20 0.40 0.25 0.25	1.10	11.00
23	41	0.035 0.035 0.09	0.21	8.61
24	12	0.33 0.22 0.10 0.22	1.30	15.60
			1010.25	

1010.25 x 1.21 = 1222.40 Kg

STR. 2500_150

Pos.	No.	FORM	UNIT LENG.	LENG.
1	14	0.50 8.15 0.60	9.25	129.50
1a	—		—	—
2	12	0.20 3.64	3.84	46.08
3	12	0.35 4.75 0.20	5.30	63.60
4	2x9	0.60 4.33	4.93	88.74
5	2x8	6.85	6.85	109.60
5a	—		—	—
6	2x4	0.20 0.95 3.74	4.89	39.12
7	2x5	0.20 5.20	5.40	54.00
8	9	2.32 2.81 1.05 ~ 1.90 2.32 2.81	6.61	59.49
9	9	1.83 2.32 1.90 ~ 2.67 1.83 2.32	6.44	57.96
9a	—		—	—
9b			—	—
10	21	1.83 2.67 1.83	6.33	132.93
10a	—		—	—
10b	—		—	—
11	10	0.98 1.83 2.61 ~ 2.67 0.98 1.83	5.45	54.50
12	6	0.98 2.61 0.98	4.57	27.42
13	7	0.98 1.68 2.61 0.98 1.68	5.27	36.89
14	5	1.68 2.61 1.68	5.97	29.85
15	10	1.18 2.61 1.18	4.97	49.70
16	3	2.87 3.40 1.11 ~ 1.31 2.87 3.40	7.48	22.44
17	11	0.60 0.20	0.80	8.80
18	14	2.25	2.25	31.50
19	3	5.60	5.60	16.80
20	16	1.55 0.20	1.75	28.00
21	4	0.20 2.67 0.20	3.07	12.28
22	10	0.20 0.40 0.25 0.25	1.10	11.00
23	41	0.035 0.035 0.09	0.21	8.61
24	12	0.33 0.22 0.10 0.22	1.30	15.60
			1134.41	

1134.41 x 1.21 = 1372.64 Kg

STR. 2500_200

Pos.	No.	FORM	UNIT LENG.	LENG.
1	14	0.50 8.40 0.60	9.50	133.00
1a	—		—	—
2	12	0.20 4.87	5.07	60.84
3	12	0.35 5.00 0.20	5.55	66.60
4	2x10	0.60 4.38	4.98	99.60
5	2x9	7.30	7.30	131.40
5a	—		—	—
6	2x4	0.20 1.20 4.75	6.15	49.20
7	2x5	0.20 5.45	5.65	56.50
8	9	2.46 3.00 1.05 ~ 1.90 2.46 3.00	6.94	62.42
9	10	1.93 2.46 1.90 ~ 2.67 1.93 2.46	6.68	66.80
9a	—		—	—
9b	—		—	—
10	27	1.93 2.67 1.93	6.53	176.31
10a	—		—	—
10b	—		—	—
11	13	0.98 1.93 2.61 ~ 2.67 0.98 1.93	5.55	72.15
12	10	0.98 2.61 0.98	4.57	45.70
13	7	0.98 1.68 2.61 0.98 1.68	5.27	36.89
14	6	1.68 2.61 1.68	5.97	35.82
15	10	1.18 2.61 1.18	4.97	49.70
16	3	3.06 3.59 1.11 ~ 1.30 3.06 3.59	7.86	23.58
17	11	0.60 0.20	0.80	8.80
18	14	2.25	2.25	31.50
19	3	5.60	5.60	16.80
20	16	1.55 0.20	1.75	28.00
21	4	0.20 2.67 0.20	3.07	12.28
22	10	0.20 0.40 0.25 0.25	1.10	11.00
23	41	0.035 0.035 0.09	0.21	8.61
24	12	0.38 0.28 0.10 0.28	1.52	18.24
			1301.74	

1301.74 x 1.21 = 1575.11 Kg

STR. 2500_250

Pos.	No.	FORM	UNIT LENG.	LENG.
1	10	0.50 8.65 0.60	9.75	97.50
1a	11	0.20 8.85 0.60	9.65	106.15
2	12	0.20 6.10	6.30	75.60
3	12	0.35 5.20 0.20	5.75	69.00
4	2x11	0.60 4.42	5.02	110.44
5	2x9	7.75	7.75	139.50
5a	—		—	—
6	2x4	0.20 1.40 5.75	7.35	58.80
7	2x5	0.20 5.65	5.85	58.50
8	9	2.57 3.09 1.05 ~ 1.90 2.57 3.09	7.14	64.26
9	10	2.05 2.57 1.90 ~ 2.67 2.05 2.57	6.91	69.10
9a	—		—	—
9b	7	0.20 1.90 ~ 2.67 0.20	2.69	18.83
10	28	2.05 2.67 2.05	6.77	189.56
10a	—		—	—
10b	16	0.20 2.67 0.20	3.07	49.12
11	14	0.98 2.05 2.61 ~ 2.67 0.98 2.05	5.67	79.38
12	14	0.98 2.61 0.98	4.57	63.98
13	7	0.98 1.68 2.61 0.98 1.68	5.27	36.89
14	6	1.68 2.61 1.68	5.97	35.82
15	10	1.18 2.61 1.18	4.97	49.70
16	3	3.15 3.69 1.11 ~ 1.39 3.15 3.69	8.09	24.27
17	11	0.60 0.20	0.80	8.80
18	14	2.25	2.25	31.50
19	3	5.60	5.60	16.80
20	16	1.55 0.20	1.75	28.00
21	4	0.20 2.67 0.20	3.07	12.28
22	10	0.20 0.40 0.25 0.25	1.10	11.00
23	41	0.035 0.035 0.09	0.21	8.61
24	12	0.40 0.28 0.10 0.28	1.56	18.72
			1532.11	

1532.11 x 1.21 = 1853.85 Kg

STR. 2500_300

Pos.	No.	FORM	UNIT LENG.	LENG.
1	10	0.50 8.85 0.60	9.95	99.50
1a	11	0.20 9.09 0.60	9.89	108.79
2	13	0.50 7.33 0.60	8.43	109.59
3	13	0.35 5.40 0.20	5.95	77.35
4	2x11	0.60 4.45	5.05	111.10
5	2x7	8.05	8.05	112.70
5a	2x7	8.05 1.80	9.85	137.90
6	2x4	0.20 1.60 6.87	8.67	69.36
7	2x5	0.20 5.85	6.05	60.50
8	9	2.65 3.19 1.05 ~ 1.90 2.65 3.19	7.32	65.88
9	11	2.12 2.65 1.90 ~ 2.71 2.12 2.65	7.08	77.88
9a	2x7	0.20 2.12 ~ 2.65 0.20	2.99	41.86
9b	2x7	0.20 1.90 ~ 2.71 0.20	2.71	37.94
10	28	2.12 2.71 2.12	6.95	194.60
10a	2x17	2.12 0.20	2.32	78.88
10b	17	0.20 2.71 0.20	3.11	52.87
11	15	0.98 2.12 2.61 ~ 2.71 0.98 2.12	5.76	86.40
12	19	0.98 2.61 0.98	4.57	86.83
13	7	0.98 1.68 2.61 0.98 1.68	5.27	36.89
14	7	1.68 2.61 1.68	5.97	41.79
15	10	1.18 2.61 1.18	4.97	49.70
16	3	3.25 3.79 1.11 ~ 1.29 3.25 3.79	8.24	24.72
17	11	0.60 0.20	0.80	8.80
18	14	2.25	2.25	31.50
19	3	5.60	5.60	16.80
20	16	1.55 0.20	1.75	28.00
21	4	0.20 2.71 0.20	3.11	12.44
22	10	0.20 0.40 0.25 0.25	1.10	11.00
23	41	0.035 0.035 0.09	0.21	8.61
24	12	0.42 0.28 0.10 0.28	1.60	19.20
			1899.38	

1899.38 x 1.21 = 2298.25 Kg

ALL BARS ARE Φ14 (1.21 Kg/m)

REFERENCE DWGS: For [illegible]n & section see dwg. No. 11/1/1/01

For [illegible]nforcement see dwgs. No. 11/1/3/01 TO 11/1/3/03

For [illegible] with variable unit length see note under the same title at dwg. No. 20/2/1/01

Scale:

Date:

Approved:

IRRIGATION & DRAINAGE STANDARDS

DWG. No. 11/1/3/25

Sheet No. 29 of 32 Rev. No.

RECTANGULAR INCLINED DROP
LIST OF REINFORCEMENT
STR. 2500_100 TO 2500_300

ISLAMIC REPUBLIC OF I[illegible]

MINISTRY OF PLAN & [illegible]UDJET

TECHNICAL RESEARCH [illegible]D
STANDARD BURE[illegible]

www.tabarestan.info تبرستان

STR. 2500–350

Pos.	No.	FORM	UNIT LENG.	LENG.
1	10	0.50 9.05 0.60	10.15	101.50
1a	11	0.20 9.29 0.60	10.09	110.99
2	13	0.20 8.50	8.70	113.10
3	13	0.35 5.65 0.20	6.20	80.60
4	2x11	0.50 4.48	4.98	109.56
5	2x7	8.35	8.35	116.90
5a	2x7	8.35 1.80	10.15	142.10
6	2x4	0.20 1.85 7.93	9.98	79.84
7	2x5	0.20 6.10	6.30	63.00
8	9	2.73 3.28 1.05 ~ 1.90 2.73 3.28	7.49	67.41
9	11	2.17 2.73 1.90 ~ 2.71 2.17 2.73	7.21	79.31
9a	2x7	0.20 2.17 ~ 2.73 0.20 0.20	3.05	42.70
9b	7	0.20 1.90 ~ 2.71 0.20	2.71	18.97
10	30	2.17 2.71 2.17	7.05	211.50
10a	2x17	2.17 0.20	2.37	80.58
10b	17	0.20 2.71 0.20	3.11	52.87
11	16	0.98 2.17 2.61 ~ 2.71 0.98 2.17	5.81	92.96
12	23	0.98 2.61 0.98	4.57	105.11
13	7	0.98 1.68 2.61 0.98 1.68	5.27	36.89
14	8	1.68 2.61 1.68	5.97	47.76
15	10	1.18 2.61 1.18	4.97	49.70
16	3	3.34 3.88 1.11 ~ 1.29 3.44 3.88	8.52	25.56
17	11	0.60 0.20	0.80	8.80
18	14	2.25	2.25	31.50
19	3	5.60	5.60	16.80
20	16	1.55 0.20	1.75	28.00
21	4	0.20 2.71 0.20	3.11	12.44
22	10	0.20 0.40 0.25 0.25	1.10	11.00
23	47	0.035 0.035 0.09	0.21	9.87
24	12	0.47 0.34 0.10 0.34	1.82	21.84
		TOTAL LENGTH	1969.16	

1969.16 x 1.21 = 2382.68Kg

STR. 2500–400

Pos.	No.	FORM	UNIT LENG.	LENG.
1	10	0.50 9.20 0.60	10.30	103.00
1a	13	0.20 9.48 0.60	10.28	133.64
2	13	0.20 9.67	9.87	128.31
3	13	0.35 5.85 0.20	6.40	83.20
4	2x14	0.60 4.52	5.12	143.36
5	2x7	8.60	8.60	120.40
5a	2x8	8.60 1.80	10.40	166.40
6	2x4	0.20 2.05 9.00	11.25	90.00
7	2x5	0.20 6.30	6.50	65.00
8	9	2.81 3.38 1.05 ~ 1.90 2.81 3.83	7.67	69.03
9	11	2.24 2.81 1.90 ~ 2.75 2.24 2.81	7.38	81.18
9a	2x7	0.20 2.24 ~ 2.81 0.20 0.20	3.13	43.82
9b	7	0.20 1.90 ~ 2.75 0.20	2.73	19.11
10	31	2.24 2.75 2.24	7.23	224.13
10a	2x18	2.24 0.20	2.44	87.84
10b	18	0.20 2.75 0.20	3.15	56.70
11	16	0.98 2.24 2.61 ~ 2.75 0.98 2.24	5.90	94.40
12	27	0.98 2.61 0.98	4.57	123.39
13	7	0.98 1.68 2.61 0.98 1.68	5.27	36.89
14	9	1.68 2.61 1.68	5.97	53.73
15	10	1.18 2.61 1.18	4.97	49.70
16	3	3.44 3.98 1.11 ~ 1.29 3.44 3.98	8.62	25.86
17	11	0.60 0.20	0.80	8.80
18	14	2.25	2.25	31.50
19	3	5.60	5.60	16.80
20	16	1.55 0.20	1.75	28.00
21	4	0.20 2.75 0.20	3.15	12.60
22	10	0.25 0.40 0.25 0.25	1.10	11.00
23	47	0.035 0.035 0.09	0.21	9.87
24	12	0.49 0.34 0.10 0.34	1.86	22.32
		TOTAL LENGTH	2139.98	

2139.98 x 1.21 = 2589.38Kg

STR. 2750–100

Pos.	No.	FORM	UNIT LENG.	LENG.
1	14	0.50 8.00 0.60	9.10	127.40
1a	—		—	—
2	13	0.20 2.35	2.55	33.15
3	13	0.35 4.60 0.20	5.15	66.95
4	2x9	0.60 4.38	4.98	89.64
5	2x8	6.40	6.40	102.40
5a	—		—	—
6	2x5	0.20 0.80 2.68	3.68	36.80
7	2x5	0.20 5.05	5.25	52.50
8	9	2.25 2.71 1.05 ~ 1.95 2.25 2.71	6.46	58.14
9	9	1.78 2.25 1.95 ~ 2.77 1.78 2.25	6.39	57.51
9a	—		—	—
9b	—		—	—
10	19	1.78 2.77 1.78	6.33	120.27
10a	—		—	—
10b	—		—	—
11	9	1.00 1.78 2.71 ~ 2.77 1.00 1.78	5.52	49.68
12	2	1.00 2.71 1.00	4.71	9.42
13	7	1.00 1.70 2.71 1.00 1.70	5.41	37.87
14	4	1.70 2.71 1.70	6.11	24.44
15	10	1.20 2.71 1.20	5.11	51.10
16	3	2.27 3.30 1.11 ~ 1.32 2.27 3.30	7.29	21.87
17	11	0.60 0.20	0.80	8.80
18	16	2.30	2.30	36.80
19	3	5.80	5.80	17.40
20	16	1.60 0.20	1.80	28.80
21	4	0.20 2.77 0.20	3.17	12.68
22	10	0.20 0.40 0.25 0.25	1.10	11.00
23	41	0.035 0.035 0.09	0.21	8.61
24	12	0.33 0.22 0.10 0.22	1.30	15.60
		TOTAL LENGTH	1078.83	

1078.83 x 1.21 = 1305.38Kg

STR. 2750–150

Pos.	No.	FORM	UNIT LENG.	LENG.
1	14	0.50 8.40 0.60	9.50	133.00
1a	—		—	—
2	13	0.20 3.64	3.84	49.92
3	13	0.35 4.80 0.20	5.35	69.55
4	2x10	0.60 4.43	5.03	100.60
5	2x9	7.00	7.00	126.00
5a	—		—	—
6	2x5	0.20 1.00 3.74	4.94	49.40
7	2x5	0.20 5.25	5.45	54.50
8	9	2.39 2.90 1.05 ~ 1.95 2.39 2.90	6.79	61.11
9	11	1.88 2.39 1.95 ~ 2.77 1.88 2.39	6.63	72.93
9a	—		—	—
9b	—		—	—
10	26	1.88 2.77 1.88	6.53	169.78
10a	—		—	—
10b	—		—	—
11	12	1.00 1.88 2.71 ~ 2.77 1.00 1.88	5.62	67.44
12	6	1.00 2.71 1.00	4.71	28.26
13	7	1.00 1.70 2.71 1.00 1.70	5.41	37.87
14	5	1.70 2.71 1.70	6.11	30.55
15	10	1.20 2.71 1.20	5.11	51.10
16	3	2.96 3.49 1.11 ~ 1.31 2.96 3.49	7.66	22.98
17	11	0.60 0.20	0.80	8.80
18	16	2.30	2.30	36.80
19	3	5.80	5.80	17.40
20	16	1.60 0.20	1.80	28.80
21	4	0.20 2.77 0.20	3.17	12.68
22	10	0.20 0.40 0.25 0.25	1.10	11.00
23	41	0.035 0.035 0.09	0.21	8.61
24	12	0.33 0.22 0.10 0.22	1.30	15.60
		TOTAL LENGTH	1264.68	

1264.68 x 1.21 = 1530.26Kg

STR. 2750–200

Pos.	No.	FORM	UNIT LENG.	LENG.
1	10	0.50 8.65 0.60	9.75	97.50
1a	11	0.20 8.85 0.60	9.65	106.15
2	13	0.20 4.87	5.07	65.91
3	13	0.35 5.05 0.20	5.60	72.80
4	2x10	0.60 4.46	5.06	101.20
5	2x9	7.45	7.45	134.10
5a	—		—	—
6	2x5	0.20 1.25 4.75	6.20	62.00
7	2x5	0.20 5.50	5.70	57.00
8	9	2.50 3.00 1.05 ~ 1.95 2.50 3.00	7.00	63.00
9	11	2.00 2.50 1.95 ~ 2.77 2.00 2.50	6.86	75.46
9a	—		—	—
9b	7	0.20 1.95 ~ 2.77 0.20	2.76	19.32
10	27	2.00 2.77 2.00	6.77	182.79
10a	—		—	—
10b	16	0.20 2.77 0.20	3.17	50.72
11	13	1.00 2.00 2.71 ~ 2.77 1.00 2.00	5.74	74.62
12	10	1.00 2.71 1.00	4.71	47.10
13	7	1.00 1.70 2.71 1.00 1.70	5.41	37.87
14	6	1.70 2.71 1.70	6.11	36.66
15	10	1.20 2.71 1.20	5.11	51.10
16	3	3.06 3.59 1.11 ~ 1.30 3.06 3.59	7.86	23.58
17	11	0.60 0.20	0.80	8.80
18	16	2.30	2.30	36.80
19	3	5.80	5.80	17.40
20	16	1.60 0.20	1.80	28.80
21	4	0.20 2.77 0.20	3.17	12.68
22	10	0.20 0.40 0.25 0.25	1.10	11.00
23	41	0.035 0.035 0.09	0.21	8.61
24	12	0.40 0.28 0.10 0.28	1.56	18.72
		TOTAL LENGTH	1501.69	

1501.69 x 1.21 = 1817.04Kg

ALL BARS ARE Φ14 (1.21 Kg/m)

REFERENCE DWGS: For plan & section see dwg. No. 11/1/1/01

For reinforcement see dwgs. No. 11/1/3/01 TO 11/1/3/03

For bars with variable unit length see note under the same title at dwg. No. 20/2/1/01

Scale:

Date:

Approved:

IRRIGATION & DRAINAGE STANDARDS

DWG. No. 11/1/3/26

Sheet No. 30 of 32 Rev. No.

RECTANGULAR INCLINED DROP
LIST OF REINFORCEMENT
STR. 2500–350 TO 2750–200

ISLAMIC REPUBLIC OF IRAN
MINISTRY OF PLAN & BUD
TECHNICAL RESEARCH AND STANDARD BUREAU

omoorepeyman.ir

STR. 2750_250

Pos.	No.	FORM	UNIT LENG.	LENG.
1	10	0.50 8.90 0.60	10.00	100.00
1a	12	0.20 9.14 0.60	9.94	119.28
2	13	0.20 6.10	6.30	81.90
3	13	0.35 5.30 0.20	5.85	76.05
4	2x11	0.60 4.52	5.12	112.64
5	2x7	7.90	7.90	110.60
5a	2x7	7.90 1.80	9.70	135.80
6	2x5	0.20 1.50 5.75	7.45	74.50
7	2x5	0.20 5.75	5.95	59.60
8	9	2.65 3.19 1.05 ~ 1.95 2.65 3.19	7.34	66.06
9	11	2.12 2.65 1.95 ~ 2.81 2.12 2.65	7.15	78.65
9a	2x7	0.20 2.12 ~ 2.65 0.20 0.20	2.99	41.86
9b	7	0.20 1.95 ~ 2.81 0.20	2.78	19.46
10	29	2.12 2.81 2.12	7.05	204.45
10a	2x16	2.12 0.20	2.32	74.24
10b	16	0.20 2.81 0.20	3.21	51.36
11	14	1.00 2.12 2.71 ~ 2.81 1.00 2.12	5.88	82.32
12	14	1.00 2.71 1.00	4.71	65.94
13	7	1.00 1.70 2.71 1.00 1.70	5.41	37.87
14	7	1.70 2.71 1.70	6.11	42.77
15	10	1.20 2.71 1.20	5.11	51.10
16	3	3.25 3.79 1.11 ~ 1.29 3.25 3.79	8.24	24.72
17	11	0.60 0.20	0.80	8.80
18	16	2.30	2.30	36.80
19	3	5.80	5.80	17.40
20	16	1.60 0.20	1.80	28.80
21	4	0.20 2.81 0.20	3.21	12.84
22	10	0.20 0.40 0.25 0.25	1.10	11.00
23	41	0.035 0.035 0.09	0.21	8.61
24	12	0.42 0.28 0.10 0.28	1.60	19.20
		TOTAL LENGTH	1854.52	

1854.52 x 1.21 = 2243.97Kg

STR. 2750_300

Pos.	No.	FORM	UNIT LENG.	LENG.
1	10	0.50 9.10 0.60	10.20	102.00
1a	12	0.20 9.34 0.60	10.14	121.68
2	13	0.20 7.33	7.53	97.89
3	13	0.35 5.50 0.20	6.05	78.65
4	2x11	0.60 4.55	5.15	113.30
5	2x7	8.20	8.20	114.80
5a	2x7	8.20 1.80	10.00	140.00
6	2x5	0.20 1.70 6.87	8.77	87.70
7	2x5	0.20 5.95	6.15	61.50
8	9	2.73 3.28 1.05 ~ 1.95 2.73 3.28	7.51	67.59
9	12	2.17 2.73 1.95 ~ 2.81 2.17 2.73	7.28	87.36
9a	2x7	0.20 2.17 ~ 2.73 0.20 0.20	3.05	42.70
9b	7	0.20 1.95 ~ 2.81 0.20	2.78	19.46
10	30	2.17 2.81 2.17	7.15	214.50
10a	2x17	2.17 0.20	2.37	80.58
10b	17	0.20 2.81 0.20	3.21	54.57
11	15	1.00 2.17 2.71 ~ 2.81 1.00 2.17	5.93	88.95
12	17	1.00 2.71 1.00	4.71	80.07
13	7	1.00 1.70 2.71 1.00 1.70	5.41	37.87
14	8	1.70 2.71 1.70	6.11	48.88
15	10	1.20 2.71 1.20	5.11	51.10
16	3	3.34 3.88 1.11 ~ 1.29 3.34 3.88	8.42	25.26
17	11	0.60 0.20	0.80	8.80
18	16	2.30	2.30	36.80
19	3	5.80	5.80	17.40
20	16	1.60 0.20	1.80	28.80
21	4	0.20 2.81 0.20	3.21	12.84
22	10	0.20 0.40 0.25 0.25	1.10	11.00
23	41	0.035 0.035 0.09	0.21	8.61
24	12	0.42 0.28 0.10 0.28	1.60	19.20
		TOTAL LENGTH	1960.86	

1960.86 x 1.21 = 2372.64Kg

STR. 2750_350

Pos.	No.	FORM	UNIT LENG.	LENG.
1	10	0.50 9.30 0.60	10.40	104.00
1a	13	0.20 9.58 0.60	10.38	134.94
2	13	0.20 8.50	8.70	113.10
3	13	0.35 5.75 0.20	6.30	81.90
4	2x11	0.60 4.58	5.18	113.96
5	2x7	8.50	8.50	119.00
5a	2x7	8.50 1.80	10.30	144.20
6	2x5	0.20 1.95 7.93	10.08	100.80
7	2x5	0.20 6.20	6.40	64.00
8	9	2.81 3.38 1.05 ~ 1.95 2.81 3.38	7.69	69.21
9	12	2.24 2.81 1.95 ~ 2.85 2.24 2.81	7.45	89.40
9a	2x7	0.20 2.24 ~ 2.81 0.20 0.20	3.13	43.82
9b	7	0.20 1.95 ~ 2.85 0.20	2.80	19.60
10	31	2.24 2.85 2.24	7.33	227.23
10a	2x18	2.24 0.20	2.44	87.84
10b	18	0.20 2.85 0.20	3.25	58.50
11	16	1.00 2.24 2.71 ~ 2.85 1.00 2.24	6.02	96.32
12	23	1.00 2.71 1.00	4.71	108.33
13	7	1.00 1.70 2.71 1.00 1.70	5.41	37.87
14	9	1.70 2.71 1.70	6.11	54.99
15	10	1.20 2.71 1.20	5.11	51.10
16	3	3.44 3.98 1.11 ~ 1.29 3.44 3.98	8.62	25.86
17	11	0.60 0.20	0.80	8.80
18	16	2.30	2.30	36.80
19	3	5.80	5.80	17.40
20	16	1.60 0.20	1.80	28.80
21	4	0.20 2.85 0.20	3.25	13.00
22	10	0.20 0.40 0.25 0.25	1.10	11.00
23	47	0.035 0.035 0.09	0.21	9.87
24	12	0.49 0.34 0.10 0.34	1.86	22.32
		TOTAL LENGTH	2093.96	

2093.96 x 1.21 = 2533.69 Kg

STR. 2750_400

Pos.	No.	FORM	UNIT LENG.	LENG.
1	10	0.50 9.50 0.60	10.60	106.00
1a	13	0.20 9.78 0.60	10.58	137.54
2	13	0.20 9.67	9.87	128.31
3	13	0.35 5.95 0.20	6.50	84.50
4	2x11	0.60 4.59	5.19	114.18
5	2x7	8.80	8.80	123.20
5a	2x8	8.80 1.80	10.60	169.60
6	2x5	0.20 2.15 9.00	11.35	113.50
7	2x5	0.20 6.40	6.60	66.00
8	9	2.83 3.38 1.05 ~ 1.95 2.83 3.38	7.71	69.39
9	12	2.29 2.83 1.95 ~ 2.85 2.29 2.83	7.52	90.24
9a	2x7	0.20 2.29 ~ 2.83 0.20 0.20	3.16	44.24
9b	7	0.20 1.95 ~ 2.85 0.20	2.80	19.60
10	32	2.29 2.85 2.29	7.43	237.76
10a	2x18	2.29 0.20	2.49	89.64
10b	18	0.20 2.85 0.20	3.25	58.50
11	16	1.00 2.29 2.71 ~ 2.85 1.00 2.29	6.07	97.12
12	24	1.00 2.71 1.00	4.71	113.04
13	7	1.00 1.70 2.71 1.00 1.70	5.41	37.87
14	9	1.70 2.71 1.70	6.11	54.99
15	10	1.20 2.71 1.20	5.11	51.10
16	3	3.44 3.98 1.11 ~ 1.29 3.44 3.98	8.62	25.86
17	11	0.60 0.20	0.80	8.80
18	16	2.30	2.30	36.80
19	3	5.80	5.80	17.40
20	16	1.60 0.20	1.80	28.80
21	4	0.20 2.85 0.20	3.25	13.00
22	10	0.20 0.40 0.25 0.25	1.10	11.00
23	47	0.035 0.035 0.09	0.21	9.87
24	12	0.49 0.34 0.10 0.34	1.86	22.32
		TOTAL LENGTH	2180.17	

2180.17 x 1.21 = 2638.01Kg

STR. 3000_100

Pos.	No.	FORM	UNIT LENG.	LENG.
1	15	0.50 8.30 0.60	9.40	141.00
1a	–		–	–
2	13	0.20 2.35	2.55	33.15
3	13	0.35 4.65 0.20	5.20	67.60
4	2x9	0.60 4.50	5.10	91.80
5	2x8	6.70	6.70	107.20
5a	–		–	–
6	2x5	0.20 0.75 2.68	3.63	36.30
7	2x5	0.20 5.10	5.30	53.00
8	9	2.32 2.81 1.20 ~ 2.08 2.32 2.81	6.77	60.93
9	9	1.83 2.32 2.08 ~ 2.87 1.83 2.32	5.63	59.67
9a	–		–	–
9b	–		–	–
10	20	1.83 2.87 1.83	6.53	130.60
10a	–		–	–
10b	–		–	–
11	10	1.00 1.83 2.81 ~ 2.87 1.00 1.83	5.67	56.70
12	1	1.00 2.81 1.00	4.81	4.81
13	7	1.00 1.75 2.81 1.00 1.75	5.56	38.92
14	4	1.75 2.81 1.75	6.31	25.24
15	10	1.25 2.81 1.25	5.31	53.10
16	3	2.87 3.38 1.26 ~ 1.49 2.87 3.38	7.63	22.89
17	12	0.60 0.20	0.80	9.60
18	16	2.35	2.35	37.60
19	3	6.00	6.00	18.00
20	16	1.65 0.20	1.85	29.60
21	4	0.20 2.87 0.20	3.27	13.08
22	10	0.20 0.40 0.25 0.25	1.10	11.00
23	41	0.035 0.035 0.09	0.21	8.61
24	12	0.33 0.22 0.10 0.22	1.30	15.60
		TOTAL LENGTH	1126.00	

1126.00 x 1.21 = 1362.46 Kg

ALL BARS ARE Φ14 (1.21 Kg/m)

REFERENCE DWGS: For plan & section see dwg.No. 11/1/1/01

For reinforcement see dwgs. No. 11/1/3/01 TO 11/1/3/03

For bars with variable unit length see note under the same title at dwg.No. 20/2/1/01

Scale:

Date:

Approved:

IRRIGATION & DRAINAGE STANDARDS

DWG.No. 11/1/3/27

Sheet No. 31 of 32 Rev.No.

RECTANGULAR INCLINED DROP
LIST OF REINFORCEMENT
STR. 2750_250 TO 3000_100

ISLAMIC REPUBLIC OF IR...
MINISTRY OF PLAN & ...DGET
TECHNICAL RESEARCH ...
STANDARD BUREAU

omoorepeyman.ir

STR. 3000_150

Pos.	No.	FORM	UNIT LENG.	LENG.
1	15	0.50 / 8.60 / 0.60	9.70	145.50
1a	—		—	—
2	13	0.20 / 3.64	3.84	49.92
3	13	0.35 / 4.90 / 0.20	5.45	70.85
4	2x10	0.60 / 4.53	5.13	102.60
5	2x9	7.20	7.20	129.60
5a	—		—	—
6	2x5	0.20 / 1.00 / 3.74	4.94	49.40
7	2x5	0.20 / 5.35	5.55	55.50
8	9	2.42 / 2.90 / 1.20 ~ 2.08 / 2.42 / 2.90	6.96	62.64
9	11	1.93 / 2.42 / 2.08 ~ 2.87 / 1.93 / 2.42	6.83	75.13
9a	—		—	—
9b	—		—	—
10	27	1.93 / 2.87 / 1.93	6.73	181.71
10a	—		—	—
10b	—		—	—
11	13	1.00 / 1.93 / 2.81 ~ 2.87 / 1.00 / 1.93	5.77	75.01
12	6	1.00 / 2.81 / 1.00	4.81	28.86
13	7	1.00 / 1.75 / 2.81 / 1.00 / 1.75	5.56	38.92
14	5	1.75 / 2.81 / 1.75	6.31	31.55
15	10	1.25 / 2.81 / 1.25	5.31	53.10
16	3	2.96 / 3.41 / 1.26 ~ 1.48 / 2.96 / 3.48	7.81	23.43
17	12	0.60 / 0.20	0.80	9.60
18	16	2.35	2.35	37.60
19	3	6.00	6.00	18.00
20	16	1.65 / 0.20	1.85	29.60
21	4	0.20 / 2.87 / 0.20	3.27	13.08
22	10	0.20 / 0.40 / 0.25 / 0.25	1.10	11.00
23	41	0.035 / 0.035 / 0.09	0.21	8.61
24	12	0.33 / 0.22 / 0.10 / 0.22	1.30	15.60
		TOTAL LENGTH		1316.81

1316.81 x 1.21 = 1593.34 Kg.

STR. 3000_200

Pos.	No.	FORM	UNIT LENG.	LENG.
1	10	0.50 / 8.90 / 0.60	10.00	100.00
1a	11	0.20 / 9.10 / 0.60	9.90	108.90
2	13	0.20 / 4.87	5.07	65.91
3	13	0.35 / 5.10 / 0.20	5.65	73.45
4	2x10	0.60 / 4.59	5.19	103.80
5	2x9	7.70	7.70	138.60
5a	—		—	—
6	2x5	0.20 / 1.20 / 4.75	6.15	61.50
7	2x5	0.20 / 5.55	5.75	57.50
8	9	2.57 / 3.09 / 1.20 ~ 2.08 / 2.57 / 3.09	7.30	65.70
9	11	2.05 / 2.57 / 2.08 ~ 2.87 / 2.05 / 2.57	7.10	78.10
9a	—		—	—
9b	7	0.20 / 2.08 ~ 2.87 / 0.20	2.88	20.16
10	28	2.05 / 2.87 / 2.05	6.97	195.16
10a	—		—	—
10b	16	0.20 / 2.87 / 0.20	3.27	52.32
11	14	1.00 / 2.05 / 2.81 ~ 2.87 / 1.00 / 2.05	5.89	82.46
12	9	1.00 / 2.81 / 1.00	4.81	43.29
13	7	1.00 / 1.75 / 2.81 / 1.00 / 1.75	5.56	38.92
14	6	1.75 / 2.81 / 1.75	6.31	37.86
15	10	1.25 / 2.81 / 1.25	5.31	53.10
16	3	3.35 / 3.68 / 1.26 ~ 1.47 / 3.35 / 3.68	8.20	24.60
17	12	0.60 / 0.20	0.80	9.60
18	16	2.35	2.35	37.60
19	3	6.00	6.00	18.00
20	16	1.65 / 0.20	1.85	29.60
21	4	0.20 / 2.87 / 0.20	3.27	13.08
22	10	0.20 / 0.40 / 0.25 / 0.25	1.10	11.00
23	41	0.035 / 0.035 / 0.09	0.21	8.61
24	12	0.40 / 0.28 / 0.10 / 0.28	1.56	18.72
		TOTAL LENGTH		1547.54

1547.54 x 1.21 = 1872.52 Kg.

STR. 3000_250

Pos.	No.	FORM	UNIT LENG.	LENG.
1	10	0.50 / 9.15 / 0.60	10.25	102.50
1a	12	0.20 / 9.39 / 0.60	10.19	122.28
2	13	0.20 / 6.10	6.30	81.90
3	13	0.35 / 5.40 / 0.20	5.95	77.35
4	2x11	0.60 / 4.62	5.22	114.84
5	2x7	8.05	8.05	112.70
5a	2x7	8.05 / 1.80	9.85	137.90
6	2x5	0.20 / 1.50 / 5.87	7.57	75.70
7	2x5	0.20 / 5.85	6.05	60.50
8	9	2.65 / 3.19 / 1.20 ~ 2.08 / 2.65 / 3.19	7.48	67.32
9	11	2.12 / 2.65 / 2.08 ~ 2.91 / 2.12 / 2.65	7.27	79.97
9a	2x7	0.20 / 2.12 ~ 2.65 / 0.20 / 0.20	2.99	41.86
9b	7	0.20 / 2.08 ~ 2.91 / 0.20	2.90	20.30
10	30	2.12 / 2.91 / 2.12	7.15	214.50
10a	2x17	2.12 / 0.20	2.32	78.88
10b	17	0.20 / 2.91 / 0.20	3.31	56.27
11	14	1.00 / 2.12 / 2.81 ~ 2.91 / 1.00 / 2.12	5.98	83.72
12	14	1.00 / 2.81 / 1.00	4.81	67.34
13	7	1.00 / 1.75 / 2.81 / 1.00 / 1.75	5.56	38.92
14	6	1.75 / 2.81 / 1.75	6.31	37.86
15	10	1.25 / 2.81 / 1.25	5.31	53.10
16	3	3.25 / 3.77 / 1.26 ~ 1.47 / 3.25 / 3.77	8.39	25.17
17	12	0.60 / 0.20	0.80	9.60
18	16	2.35	2.35	37.60
19	3	6.00	6.00	18.00
20	16	1.65 / 0.20	1.85	29.60
21	4	0.20 / 2.91 / 0.20	3.31	13.24
22	10	0.20 / 0.40 / 0.25 / 0.25	1.10	11.00
23	41	0.035 / 0.035 / 0.09	0.21	8.61
24	12	0.42 / 0.28 / 0.10 / 0.28	1.60	19.20
		TOTAL LENGTH		1897.73

1897.73 x 1.21 = 2296.25 Kg.

STR. 3000_300

Pos.	No.	FORM	UNIT LENG.	LENG.
1	11	0.50 / 9.35 / 0.60	10.45	114.95
1a	14	0.20 / 9.53 / 0.60	10.43	146.02
2	14	0.20 / 7.33	7.53	105.42
3	13	0.35 / 5.60 / 0.20	6.15	79.95
4	2x11	0.60 / 4.65	5.25	115.50
5	2x7	8.45	8.45	118.30
5a	2x8	8.45 / 1.80	10.25	164.00
6	2x5	0.20 / 1.70 / 6.87	8.77	87.70
7	2x5	0.20 / 6.05	6.25	62.50
8	9	2.73 / 3.22 / 1.20 ~ 2.08 / 2.73 / 3.22	7.59	68.31
9	11	2.24 / 2.73 / 2.08 ~ 2.95 / 2.24 / 2.73	7.49	82.39
9a	2x7	0.20 / 2.24 ~ 2.73 / 0.20 / 0.20	3.09	43.26
9b	7	0.20 / 2.08 ~ 2.95 / 0.20	2.92	20.44
10	31	2.24 / 2.95 / 2.24	7.43	230.33
10a	2x18	2.24 / 0.20	2.44	87.84
10b	18	0.20 / 2.95 / 0.20	3.35	60.30
11	16	1.00 / 2.24 / 2.81 ~ 2.95 / 1.00 / 2.24	6.12	97.92
12	18	1.00 / 2.81 / 1.00	4.81	86.58
13	7	1.00 / 1.75 / 2.81 / 1.00 / 1.75	5.56	38.92
14	8	1.75 / 2.81 / 1.75	6.31	50.48
15	10	1.25 / 2.81 / 1.25	5.31	53.10
16	3	3.34 / 3.87 / 1.26 ~ 1.46 / 3.34 / 3.87	8.57	25.71
17	12	0.60 / 0.20	0.80	9.60
18	16	2.35	2.35	37.60
19	3	6.00	6.00	18.00
20	16	1.65 / 0.20	1.85	29.60
21	4	0.20 / 2.95 / 0.20	3.35	13.40
22	10	0.20 / 0.40 / 0.25 / 0.25	1.10	11.00
23	47	0.035 / 0.035 / 0.09	0.21	9.87
24	12	0.49 / 0.34 / 0.10 / 0.34	1.86	22.32
		TOTAL LENGTH		2091.31

2091.31 x 1.21 = 2530.49 Kg.

STR. 3000_350

Pos.	No.	FORM	UNIT LENG.	LENG.
1	11	0.50 / 9.55 / 0.60	10.65	117.15
1a	14	0.20 / 9.83 / 0.60	10.63	148.82
2	14	0.20 / 8.50	8.70	121.80
3	13	0.35 / 5.85 / 0.20	6.40	83.20
4	2x12	0.60 / 4.69	5.29	126.96
5	2x7	8.75	8.75	122.50
5a	2x8	8.75 / 1.80	10.55	168.80
6	2x5	0.20 / 1.95 / 7.93	10.08	100.80
7	2x5	0.20 / 6.30	6.50	65.00
8	9	2.83 / 3.38 / 1.20 ~ 2.08 / 2.83 / 3.38	7.85	70.65
9	11	2.29 / 2.83 / 2.08 ~ 2.95 / 2.29 / 2.83	7.64	84.04
9a	2x7	0.20 / 2.29 ~ 2.83 / 0.20 / 0.20	3.16	44.24
9b	7	0.20 / 2.08 ~ 2.95 / 0.20	2.92	20.44
10	32	2.29 / 2.95 / 2.29	7.53	240.96
10a	2x18	2.29 / 0.20	2.49	89.64
10b	18	0.20 / 2.95 / 0.20	3.35	60.30
11	16	1.00 / 2.29 / 2.81 ~ 2.95 / 1.00 / 2.29	6.17	98.72
12	22	1.00 / 2.81 / 1.00	4.81	105.82
13	7	1.00 / 1.75 / 2.81 / 1.00 / 1.75	5.56	38.92
14	9	1.75 / 2.81 / 1.75	6.31	56.79
15	10	1.25 / 2.81 / 1.25	5.31	53.10
16	3	3.44 / 3.97 / 1.26 ~ 1.46 / 3.44 / 3.97	8.77	26.31
17	12	0.60 / 0.20	0.80	9.60
18	16	2.35	2.35	37.60
19	3	6.00	6.00	18.00
20	16	1.65 / 0.20	1.85	29.60
21	4	0.20 / 2.95 / 0.20	3.35	13.40
22	10	0.20 / 0.40 / 0.25 / 0.25	1.10	11.00
23	47	0.035 / 0.035 / 0.09	0.21	9.87
24	12	0.49 / 0.34 / 0.10 / 0.34	1.86	22.32
		TOTAL LENGTH		2196.35

2196.35 x 1.21 = 2657.58 Kg.

ALL BARS ARE Φ14 (1.21 Kg/m)

REFERENCE DWGS: For plan & section see dwg. No. 11/1/1/01

For reinforcement see dwgs. No. 11/1/3/01 TO 11/1/3/03

For bars with variable unit length see note under the same title at dwg. No. 20/2/1/01

Scale:	IRRIGATION & DRAINAGE STANDARDS	
Date:	DWG. No. 11/1/3/28	RECTANGULAR INCLINED DROP LIST OF REINFORCEMENT
Approved:	Sheet No. 32 of 32 Rev. No.	STR. 3000_150 TO 3000_350

ISLAMIC REPUBLIC [illegible]AN
MINISTRY OF PLAN[illegible] BUDJET
TECHNICAL RESEA[illegible] AND
STANDARD BUR[illegible]

omoorepeyman.ir

Group No.	DESIGNATION	DWG NO.	REMARKS
19/3	TYPICAL CANAL SECTION WITH EARTH LINING		#of sheets:2
19/3	Typical canal section in fill and cut with earth lining	19/3/1/01	
19/3	" " " " cut with earth lining	19/3/1/02	
19/4	TYPICAL ROAD SECTION	19/4/1/01	#of sheets:1
20/2	GENERAL NOTES		#fo sheets:3
20/2	Concrete reinforcement	20/2/1/01	
20/2	Detailing reinforcement - Joint Waterstop	20/2/1/02	
20/2	" " - " "	20/2/1/03	

omoorepeyman.ir

Group No.	DESIGNATION	DWG No.	REMARKS
15/3	WEIR GAGE INSTALLATION - PLAN AND SECTIONS	15/3/1/01	# of sheets: 1
16	ENERGY DISSIPATORS		
16/1	BAFFLED OUTLET		# of sheets: 12
16/1	Baffled outlet - Plan and sections	16/1/1/01	
16/1	" " - Dimension Table	16/1/2/01	
16/1	" " - Reinforcement - Plan and section Group 1	16/1/3/01	
16/1	" " - " - Plan and section Group 2	16/1/3/02	
16/1	" " - " - Plan and section Group 3	16/1/3/03	
16/1	" " - " - Plan and section Group 4	16/1/3/04	
16/1	" " - " - Plan and section Group 5	16/1/3/05	
16/1	" " - " - Plan and section Group 6	16/1/3/06	
16/1	" " - List of reinforcement- STR 100 to 160	16/1/3/07	
16/1	" " - " " " - STR 180 to 240	16/1/3/08	
16/1	" " - " " " - STR 260 to 320	16/1/3/09	
16/1	" " - " " " - STR 340 to 400	16/1/3/10	
16/2	BAFFLED APRON DROPS		# of sheets: 4
16/2	Baffled apron drops - Design considerations- Page 1	16/2/2/01	
16/2	" " " - " " - Page 2	16/2/2/02	
16/2	" " " - " example - Page 1	16/2/2/03	
16/2	" " " - " " - Page 2	16/2/2/04	
17	PIPES		
17/1	TYPICAL PIPE CONNECTION		# of sheets: 3
17/1	Typical pipe connection to structures - Option 1	17/1/1/01	
17/1	Typical pipe connection to structures - Option 2	17/1/1/02	
17/1	" " " " " - Option 3	17/1/1/03	
17/2	CONCRETE PIPES		# of sheets: 4
17/2	Concrete pipes - Pipe placing & trench excavation	17/2/1/01	
17/2	" " - Reinforcement - Group 1	17/2/1/02	
17/2	" " - " - Group 2	17/2/1/03	
17/2	" " - " - Group 3	17/2/1/04	
17/3	BEND AND COLLAR FOR PRECAST CONCRETE PRESSURE PIPE	17/3/1/01	# of sheets: 1
18	SAFETY FACILITIES		
18/1	FENCE	18/1/1/01	# of sheets: 1
18/2	PIPE HANDRAIL, GUARD POST, AND GUIDE POST	18/2/1/01	# of sheets: 1
18/3	GRATING, TRASHRACK AND LADDER Plan , Sections and Details	18/3/1/01	# of sheets: 1
19	TYPICAL CANAL SECTIONS		
19/1	TYPICAL UNLINED CANAL SECTIONS		# of sheets:1
19/1	Typical unlined canal sections	19/1/1/01	
19/2	TYPICAL CONCRETE LINED CANAL SECTIONS		# of sheets: 1
19/2	Typical concrete lined canal sections - Page 1	19/2/1/01	

omoorepeyman.ir

Group No.	DESIGNATION	DWG No.	REMARKS
13/2	EROSION PROTECTION FOR CULVERT AND CANAL CROSS DRAINAGE	13/2/1/01	#of sheets:1
13/3	EROSION PROTECTION FOR CHECK DROP,PIPE INLET OR OUTLET, CONTROL AND PIPE INLET	13/3/1/01	#of sheets:1
13/4	EROSION PROTECTION TYPE' QUANTITIES AND NOTES	13/4/1/01	#of sheets:1
13/5	TRANSITION DESCRIPTION AND SELECTION	13/5/1/01	#of sheets:1
13/6	CONCRETE TRANSITION - TYPE I		#of sheets:3
13/6	Concrete transition - Type 1- Plan and sections	13/6/1/01	
13/6	" " - " 1- Reinforcement Plan and sections	13/6/3/01	
13/6	" " - " 1-List of reinforcement	13/6/3/02	
13/7	CONCRETE TRANSITION - TYPE 2		#of sheets:4
13/7	Concrete transition - Type 2- Plan and sections	13/7/1/01	
13/7	" " - Type 2- Reinforcement Plan and sections	13/7/3/01	
13/7	" " - Type 2- List of reinforcement	13/7/3/02	
13/7	" " - Type 2- List of reinforcement	13/7/3/03	
13/8	CONCRETE TRANSITION- TYPE 3		#of sheets:4
13/8	Concrete transition - Type 3- Plan and sections	13/8/1/01	
13/8	" " - " 3- Reinforcement Plan and sections	13/8/3/01	
13/8	" " - " 3- List of reinforcement	13/8/3/02	
13/8	" " - " 3- List of reinforcement	13/8/3/03	
13/9	CONCRETE TRANSITION - TYPE 4		#of sheets:3
13/9	Concrete transition - Type 4- Plan and sections	13/9/1/01	
13/9	" " - " 4- Reinforcement Plan and sections	13/9/3/01	
13/9	" " - Type 4- List of reinforcement	13/9/3/02	
13/10	CONCRETE TRANSITION - TYPE 5		#of sheets:1
13/10	Concrete transition - Type 5- Plan and sections	13/10/1/01	
13/11	DRAIN INLETS	13/11/1/01	#of sheets: 1

Group No.	DESIGNATION	DWG	REMARKS
13/12	SIDE SPILLWAY		#of sheets:3
13/12	Side channel spillway - With slide gate	13/12/4/01	
13/12	" " " - " " "	13/12/4/02	
13/12	" " " - " " "	13/12/4/03	
13/13	Riprap inclined drop and protection in intersection of collector drain with lateral drain	13/13/1/01	#of sheets:1
14	DRAINAGE STRUCTURES		
14/1	HEAD WALLS		#of sheets:9
14/1	Typical head wall for box culverts-Plan and sections	14/1/1/01	
14/1	" " " " pipe " - " " "		
	(Straight)	14/1/1/02	
14/1	" " " " " " -Plan and sections		
	(Inclined)	14/1/1/03	
14/1	Head walls for 1 and 2 barrels box and pipe culverts- Reinforcement sections	14/1/3/01	
14/1	" " " 1 barrel box culvert- List of reinforcement- STR 1to6	14/1/3/02	
14/1	" " " 1 barrel box culvert- List of reinforcement- STR 7to12	14/1/3/03	
14/1	" " " 2 barrel box culvert- List of reinforcement -STR 1to8	14/1/3/04	
14/1	" " " 1 barrel pipe culvert-List of reinforcement- STR 1to8	14/1/3/05	
14/1	" " " 2 barrel pipe culvert- List of reinforcement -STR 1to4	14/1/3/06	
14/2	CULVERT		#of sheets:1
14/2	Culvert - Plan and sections	14/2/1/01	
14/3	TILE DRAIN OUTLET	14/3/1/01	#of sheets:1
15	WATER MEASUREMENT STRUCTURES		
15/1	PARSHALL FLUMES		#of sheets:3
15/1	Parshall flumes - Plan and sections	15/1/1/01	
15/1	" " - Reinforcement	15/1/3/01	
15/1	" " - List of reinforcement-STR 1 to 9	15/1/3/02	
15/2	WEIRS		#of sheets:6
15/2	Contracted cipolletti and rectangular weirs (Plan and sections)	15/2/1/01	
15/2	" rectangular weir- Dimension table	15/2/2/01	
15/2	" cipolletti weir- Dimen.table	15/2/2/02	
15/2	" " and rectangular weirs-Rein.	15/2/3/01	
15/2	" weirs-List of reinforcement,STR 30to70	15/2/3/02	
15/2	" " -List of reinforcement ,STR.70to120	15/2/3/03	

omoorepeyman.ir

Sup No.	DESIGNATION	DWG No.	REMARKS
12/3	Check drops - List of reinforcement -STR 1 to 8	12/3/3/02	
12/3	" " - " " " -STR 9 to 16	12/3/3/03	
12/3	" " - " " " -STR 17 to 24	12/3/3/04	
12/4	**CHECK DROPS - (1620<Q<3000 1/s)**		# of sheets: 5
12/4	Check drops - (Conc. canal)- Q=1620 ~ 3000 1/s (Plan and secitons)	12/4/1/01	
12/4	" " - (Earth canal)- Q=1620 ~ 3000 1/s (Plan and sections)	12/4/1/02	
12/4	" " - Reinforcement-(Plan and sections)	12/4/3/01	
12/4	" " - List of reinforcement -STR 1 to 6	12/4/3/02	
12/4	" " - " " " -STR 7 to 11	12/4/3/03	
12/5	**CONTROL AND PIPE INLET**		# of sheets: 4
12/5	Control notch - Plan and sections	12/5/1/01	
12/5	" " - Process to select	12/5/2/01	
12/5	" " - Graphs	12/5/2/02	
12/5	" " - Reinforcement	12/5/3/01	
12/6	**CHECK AND PIPE INLET**		# of sheets: 6
12/6	Pipe inlet with check structure-(Concrete canal)	12/6/1/01	
12/6	" " " " " -(Earth canal)	12/6/1/02	
12/6	" " " " " - Reinforcement (Plan and sections)	12/6/3/01	
12/6	" " " " " - List of reinforcement (STR. 1 to 5)	12/6/3/02	
12/6	" " " " " - List of reinforcement (STR. 6 to 13)	12/6/3/03	
12/6	" " " " " - List of reinforcement (STR. 14 to 21)	12/6/3/04	

Group No.	DESIGNATION	DWG No.	REMARKS
12/7	**DIVISION BOX**		# of sheets: 18
12/7	Division box - (Type 1)	12/7/1/01	
12/7	" " - (" 2)	12/7/1/02	
12/7	" " - (" 3)	12/7/1/03	
12/7	" " - (" 4)	12/7/1/04	
12/7	" " - (" 5)	12/7/1/05	
12/7	" " - (" 6)	12/7/1/06	
12/7	" " - (" 7)	12/7/1/07	
12/7	" " - (" 8)	12/7/1/08	
12/7	" " - (" 9)	12/7/1/09	
12/7	" " - (Type 1) - Reinforcement	12/7/3/01	
12/7	" " - (" 2) - "	12/7/3/02	
12/7	" " - (" 3) - "	12/7/3/03	
12/7	" " - (" 4) - "	12/7/3/04	
12/7	" " - (" 5) - "	12/7/3/05	
12/7	" " - (" 6) - "	12/7/3/06	
12/7	" " - (" 7) - "	12/7/3/07	
12/7	" " - (" 8) - "	12/7/3/08	
12/7	" " - (" 9) - "	12/7/3/09	
12/8	**TURNOURTS**		# of sheets:4
12/8	Turnouts - Plan and sections	12/8/1/01	
12/8	" - Reinforcement- Plan and sections	12/8/3/01	
12/8	" - List of reinforcement-STR 600-1 to 700-1	12/8/3/02	
12/8	" - " " " -STR 700-2 to1000-2	12/8/3/03	
12/9	**CONSTANT HEAD ORIFICE**		# of sheets:6
12/9	Constant head orifice- Plan and sections	12/9/1/01	
12/9	" " " - Reinforcement(Pland and sections	12/9/3/01	
12/9	" " " - List of reinforcement Dia.300 to 500	12/9/3/02	
12.9	" " " - List of reinforcement Dia.500 to 700	12/9/3/03	
12.9	" " " - List of reinforcement Dia.700 to 800	12/9/3/04	
12/9	" " " - List of reinforcement Dia.800 to 900	12/9/3/05	
13	**PROTECTING STRUCTURES**		
13/1	**EROSION PROTECTION FOR CULVERT AND COLLECTOR DRAIN TO PROJECT DRAIN**	13/1/1/01	

omoorepeyman.ir

Group No.	DESIGNATION	DWG NO.	REMARKS
11/3	Pipe drop with check inlet and concrete outlet (Pipe construction dimensions)	11/3/2/02	
11/3	" " " " inlet and concrete outlet (Pipe construction dimensions)	11/3/2/03	
11/3	" " " " inlet and concret outlet (Pipe construction dimensions)	11/3/2/04	
11/3	" " " " inlet and concret oultlet (Pipe construction dimensions)	11/3/2/05	
11/3	" " " " inlet and concrete outlet (Pipe construction dimensions)	11/3/2/06	
11/3	" " " " inlet and concrete outlet (Pipe construction dimensions)	11/3/2/07	
11/3	" " " " inlet and concrete outlet (Pipe construction dimensions)	11/3/2/08	
11/3	" " " " inlet and concrete outlet (Pipe construction dimensions)	11/3/2/09	
11/3	" " " " inlet and concrete outlet (Pipe construction dimensions)	11/3/2/10	
11/3	" " " " inlet and concrete outlet (Pipe construction dimensions)	11/3/2/11	
11/3	" " " " inlet and concret outlet (Pipe construction dimensions)	11/3/2/12	
11/3	" " " " inlet and concret outlet (Pipe construction dimensions)	11/3/2/13	
11/3	" " " " inlet and concret outlet (Pipe construction dimensions)	11/3/2/14	
11/3	" " " " inlet and concrete outlet (Pipe construction dimensions)	11/3/2/15	
11/3	" " " " inlet and concrete outlet (Pipe construction dimensions)	11/3/2/16	
11/3	" " " " inlet and concrete outlet (Pipe construction dimensions)	11/3/2/17	
11/3	" " " " inlet and concret outlet (Pipe construction dimensions)	11/3/2/18	
11/4	PIPE DROP WITH BAFFLED OUTLET	11/4/1/01	#of sheets:1
11/5	ROAD CROSSING- TYPICAL POSITION	11/5/1/01	#of sheets:1
11/6	INVERTED SIPHON-TYPICAL POSITION	11/6/1/01	#of sheets:2
11/6	INVERTED SIPHON AND ROAD CROSSING	11/6/1/02	

Group No.	DESIGNATION	DWG NO.	REMARKS
12	REGULATING STRUCTURES		#of sheets:6
12/1	CHECK STRUCTURES -(360≤ Q≤1620 l/s)		
12/1	Concrete Canal - Check structures - Q=360 ~1620 l/s (plan and sections)	12/1/1/01	
12/1	Earth canal Check structures - Q=360 ~1620 l/s (Plan and sections)	12/1/1/02	
12/1	Check structures-Reinforcement - (Plan and sections)	12/1/3/01	
12/1	" " -List of reinforcement-STR 1 to 8	12/1/3/02	
12/1	" " - " " " -STR 9 to 16	12/1/3/03	
12/1	" " - " " " -STR 16 to 24	12/1/3/04	
12/2	CHECK STRUCTURES-(1620≤ Q≤ 3200 l/s)		#of sheets:5
12/2	Check structures-(Conc.canal)- Q=1600 ~3200 l/s (Plan and sections)	12/2/1/01	
12/2	" " -(Earth canal- Q=1600 ~3200 l/s) (Plan and sections)	12/2/1/02	
12/2	" " -Reinforcement -Plan and sections	12/2/3/01	
12/2	" " -List of reinforcement-STR 1 to 6	12/2/3/02	
12/2	" " - " " " -STR 7 to 11	12/2/3/03	
12/3	CHECK DROPS- (300≤ Q≤1620 l/s)		#of sheets:6
12/3	Check drops -(Conc.canal) - Q=300 ~1620 l/s (Plan and sections)	12/3/1/01	
12/3	" " -(Earth canal)- Q=300 ~1620 l/s (Plan and sections)	12/3/1/02	
12/3	" " -Reinforcement - (plan and sections)	12/3/3/01	

omoorepeyman.ir